albert Jagger limited

manufacturers

and

distributors

of

industrial

hardware

to

engineers,

bodybuilders

and

associated

industries

HEYWOOD - branch

Foxhill Works,
Fox Street,
Heywood,
Lancashire.
OL10 1EA
United Kingdom

t: 01706 692110
f: 01706 625936

e: heywood@albert-jagger.co.uk

WALSALL

Head Office/Export

Centaur Works
Green Lane
Walsall
West Midlands
WS2 8HG
United Kingdom

t: +44 (0) 1922 471000
f: +44 (0) 1922 648021

e: sales@albert-jagger.co.uk
e: export@albert-jagger.co.uk

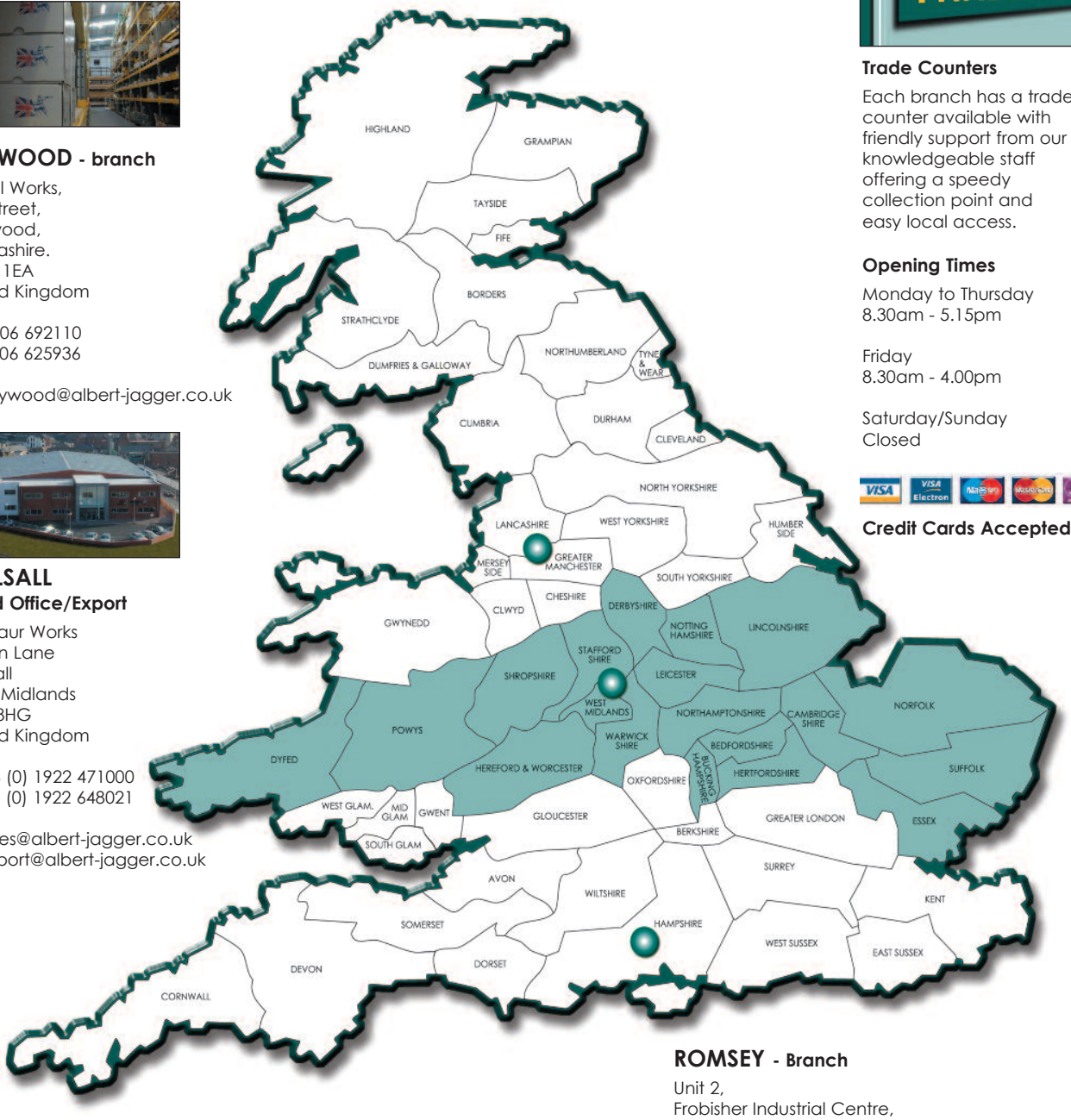

Trade Counters

Each branch has a trade counter available with friendly support from our knowledgeable staff offering a speedy collection point and easy local access.

Opening Times

Monday to Thursday
8.30am - 5.15pm

Friday
8.30am - 4.00pm

Saturday/Sunday
Closed

Credit Cards Accepted

ROMSEY - Branch

Unit 2,
Frobisher Industrial Centre,
Budds Lane,
Romsey,
Hampshire.
SO51 0EZ
United Kingdom

t: 01794 525870
f: 01794 515586

e: romsey@albert-jagger.co.uk

www.albert-jagger.co.uk

On-line catalogue & latest new products.

Catalogue

7th edition

ESTABLISHED 1887

MANUFACTURERS OF INDUSTRIAL HARDWARE
TO ENGINEERS, BODYBUILDERS AND ASSOCIATED INDUSTRIES

This catalogue and the copyright therein is the property of Albert Jagger Limited and may not be reproduced in any form without prior written consent of Albert Jagger Limited.

As part of our continual programme of improvement, Albert Jagger Limited reserve the right to alter and amend product specifications without prior notice. All specifications, weights and dimensions given in this catalogue are approximate and are intended as a guide only.

As we, Albert Jagger Limited have no control over the intended use of the products shown, we cannot guarantee its suitability. Therefore, if in any doubt or you require further information, please contact us with your requirements.

Walsall: 01922 471000 Heywood: 01706 692110 Romsey: 01794 525870 www.albert-jagger.co.uk

experience design before production

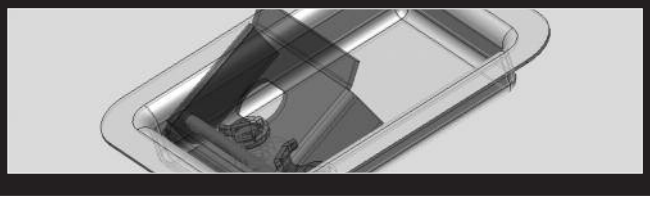

Autodesk Inventor

Digital Prototyping

Industry experts are championing Digital Prototyping as a way to cost effectively validate design ideas and accelerate the development of competitive products.

With substantial investment in the latest version of Autodesk Inventor our manufacturing division is now in a position to help you develop a significant competitor advantage by out sourcing some or all of your new product design and development processes. Quite simply, a bolt on design department offering 3D CAD engineering support.

Getting the initial design concept right is the key to any successful project. Utilising the latest in dynamic design software backed up with versatile manufacturing facilities they can provide the fastest way to develop initial paper sketches of product ideas into fully constrained 3D printed assembly models. These digital prototypes validate form, fit and function of a design and present the opportunity to investigate and evaluate different mechanical design concepts minimising the need for expensive testing with physical prototypes.

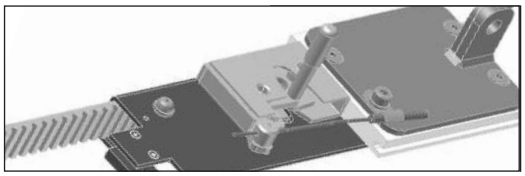

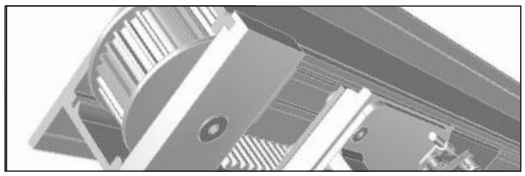

The unique Inventor software allows tighter integration with other CAD systems and management applications. This enables the efficient and secure exchange of design data and encourages earlier collaboration between design and manufacturing workgroups. Workgroups, who can then manage and track real-time product development changes for improved work flow performance and greater project management efficiency.

For further details contact 01922 470750.

Industrilas

one philosophy - many solutions

Industrilas

With a head office based in Sweden and extensive manufacturing facilities, Industrilas specialise in the production of a diverse range of **integrated industrial products** which include latching systems, hinges and sealing technology for a wide range of applications.

Taking great pride in their products, they combine **quality, design and function in technically advanced products** that are guaranteed to work under the most **demanding industrial environments**.

With an **enviable quality process** Industrilas are currently certified by **TUV** to **EN ISO 9001:2008** and **EN ISO 14001:2004**. All products also comply with the **RoHS Directive**.

Competence creates trust - from initial conception through to product performance, Industrilas **stringently control the whole production process in-house** with facilities which include 3D printers for prototyping, tooling and plastics moulding technology, casting and die-cast zinc facilities, advanced assembly equipment, even down to surface preparations such as powder coating and zinc plating.

swing handles

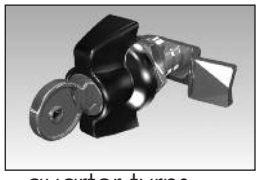

quarter turns

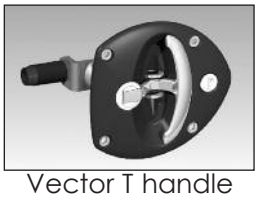

Vector T handle

handles

hinges

Versatility - the Industrilas standard program includes a wide variety of products that can be assembled in a modular system. With an enviable Global reputation for innovation, quality and reliability, Industrilas promote a number of key brands in answer to market specific issues as well as a strong portfolio of standard products:

System VISION™
Manufactured from polyamide, die-cast zinc or stainless steel, this range of IP rated swing handles can be used independently or in conjunction with the Industrilas range of rod locks and 3 point locking systems.

System KLIMA-FLEX™
A range of handles, latches and hinges for use on insulated doors in climate control and HVAC applications. Manufactured from polyamide, die-cast zinc and stainless steel, these modular components offer single or multi-point latches with cams, roller cams and rod latches.

VECTOR™ - T Handle
Impeccable design combined with pure function. A robust folding T handle recessed into a low profile housing with an integrated compression function - this range of T handles manufactured from polyamide, die-cast zinc or stainless steel offers high vibration resistance, numerous cam options and exceptional sealing abilities.

HINGES
Innovative design solutions for industry standard problems - hinges with numerous opening angles for surface mounted or recessed door design, for single or adjacent cabinets. Screw-on or weld-on options or adjustable hinges with nylon, die-cast zinc, aluminium, steel or stainless options available.

Visit www.albert-jagger.co.uk for further details or alternatively contact us for an Industrilas product catalogue.

"...constant regard for the needs of our customers..."

Since our foundation in 1887, Albert Jagger Limited have been associated with innovation, excellent service and the highest quality products for vehicles of all types.

Astute management, strategic growth and a constant regard for the needs of our customers have seen the company become one of the largest manufacturers and suppliers to the commercial vehicle bodybuilder, boat builder, agricultural and engineering industries in the U.K. and a major supplier to many countries World-wide.

"...commitment to design & development..."

Innovation and the constant introduction of new and unique products have always been strong features of the company's philosophy. The fact that many key items in our range are patented to Albert Jagger Limited reflects the commitment to design and development.

Quality Management System

We at Albert Jagger Limited recognise the need to focus on customer satisfaction and that means not only meeting their expectations but exceeding them. One of our key objectives is to continually strive to improve quality of both product and service. To achieve this we maintain a quality management system which is compliant with **ISO 9001:2000** requirements. This provides the means to perpetually adapt to changes in the market place by maintaining continuous improvement strategies for both products and procedures with the active involvement of all employees and customers alike.

2005/427

"...swift, efficient & flexible..."

Our manufacturing division is also accredited with BS EN ISO 9001:2000 including product design and development. Capabilities include presswork, milling, turning, welding and full assembly facilities. A fully equipped tool-room supported by the latest CAD technology with 3D modelling capabilities, combines dynamic product development with dramatic time and cost reductions. This enables us to provide a swift, efficient and flexible response to any individual requirements not met by our standard stock range.

"...extensive product portfolio..."

With over 100 years of experience, we manufacture & supply commercial vehicle components into various transport sectors covering both the OEM and aftermarkets. Primarily, servicing the commercial vehicle body building industry with fittings, accessories & spares for use on;

- Commercial vehicles
- Buses
- Agricultural machinery
- Mobile motorhomes
- Heavy plant
- Trailers
- Coaches
- Caravans
- Shipping containers
- Construction machinery

Our extensive product portfolio also enables us to target other transport sectors as well as considerable scope to develop into the increasingly diverse disciplines within the general engineering sector:

- Aerospace
- Rail
- Industrial enclosures
- Marine
- Medical aids
- Production machinery

"...professional service with a flexible approach..."

With distribution centres strategically placed at Walsall in the West Midlands (head office), Heywood in Lancashire and Romsey in Hampshire, we can ensure our broad customer base is effectively serviced nationwide.

Supplying to over 70 countries throughout the World our Export division is based at Head office in Walsall, West Midlands. Offering a professional service with a flexible approach, we can draw from a vast logistical experience to ensure prompt and accurate delivery. We can offer very competitive rates for all modes of transport, whether sea, land or air.

" Our future depends on your success."

section a

IRONWORK

Jagalok Dropside System	a1-a3
Pillars & Sockets	a2-a4
Sideguard System	a5
Gudgeons	a6-a7
Hinges	a7-a9
Antiluce Fasteners	a10-a11
Eye Plates	a12
Retaining Pins	a13-a17
Side & Tailboard Fittings	a18-a24
Rope Hooks	a25-a26
Ramp Fasteners	a27
Ramp Springs	a28-a31
Trailer Fittings	a32-a33
Skip Fittings	a34
Spring Bolts	a35-a39
Metal Profiles	a40
Chains & Accessories	a41-a43
Body Mounting Brackets	a44-a57
U Bolts	a57-a58

section a

CARGO CONTROL

Curtain Tensioners	a59
Strap Assemblies	a60-a62
Transporter Winches	a63
Internal Tracking	a64-a65
Shoring Poles	a66
Pole Cups	a67
Lashing Rings	a68-a71
Twist Locks	a72
Corner Castings	a73

section b

CAB & BODY FITTINGS

Bansbach Gas Springs	b1-b10
Bansbach Electronic Dampers	b10
Bansbach Linear Motion	b11
Telescopic Stays	b12
Accuride Telescopic Slides	b13-b30
Ojop Overcentre Fasteners	b31-b34
Overcentre Fasteners	b35-b36
Gravelly Fasteners	b37
Bonnet Fasteners	b38-b39
Hasp & Staples	b40
Floor Trap Fasteners	b41
Tip-up Seat Fittings	b41
Coat Hooks	b42
Ashtrays	b42
Steps	b43-b44
Anti Slip Tape	b44
Ventilators	b45-b52
Mirrors	b53
Marker Boards	b54-b55
Number Plate Holders	b55
Licence Holders	b56
Rubber Buffers	b57-b64
Rubber Matting	b64
Fender Strip	b65
Fuel Filler Caps	b66
First Aid Kits	b67
Emergency Hammer	b67
Fire Extinguishers	b68-b69
Fire Extinguisher Boxes	b69
Tool Boxes	b70-b71
Hand Wash Units	b72-b73
Reversing Alarms	b74
Reversing Camera	b75
Inverter	b76
Battery Connectors	b77
Wheel Chocks	b78-b79

section c

HINGES

Self Aligning Hinges	c1
Concealed Locker Hinge	c2
Butt Hinges	c2-c3
Continuous Hinges	c4-c7
Plastic Hinges	c7-c9
Lift-off Hinges	c10-c13
Friction Hinges	c13-c14
Chrome Hinges	c14
Pressed Steel Hinges	c15-c27
Tail-lift hinge	c21
Rear Van Door Hinges	c22-c27

section d

HANDLES, LOCKS & LATCHES

Slam Locks	d1-d3
Strikers	d4
Paddle Locks	d5-d11
Rod Locks	d12-d15
End Slams	d16
Slam Locks	d17
Budget Locks	d18-d19
Tee Keys	d20
Escutcheons	d21
Compartment Locks	d22-d25
Quarter Turn Locks	d25
Sliding Door Locks	d26-d27
Rotor Latches	d28-d29
Push Button Handles	d30-d31
Lever Handles	d31-d33
Tee Handles	d33-d34
Emergency Stop	d34
Dish Handles	d35-d37
Cams	d38
Interior Handles	d38
Thimble Insert	d38
Pull Handles	d39-d44
Panels Handles	d45
Chest Handles	d45
Trimark - Handles, Locks & Latches	d46-d54

section e

DOOR & WINDOW FITTINGS

Door Retainers	e1-e7
Check Straps	e8-e9
Emergency Door Gear	e10-e13
Door Gear	e14-e23
Window Fittings	e24-e27
Glazing Accessories	e28-e30
Extruded Seals	e31-e37
Door Seals	e38-e39
Brush Seal	e40

section f

LIGHTING & ELECTRICAL

Bulkhead Lamp	f1
Number Plate Lamps	f1
Roof Lamps	f2-f3
Fluorescent Lamps	f4-f6
Beacons	f7
Marker Lamps	f8-f10
Reflectors	f11
Lamp Cages	f11
Audible Warning Devices	f11
LED Lamps	f12-f13
Conspicuity Tape	f14

section g

WINGS & FITTINGS

Single Arch Mudguards	g1-g3
Flat Top Mudguards	g3
Tandem Mudguards	g4
Wing Spats	g4
Mudguard Stays	g5
Mudguard Bracket Clamps	g6-g7
Spray Suppression	g8

section h

FASTENERS, ADHESIVES & SEALANTS

Avdel Mechanical Fasteners	h1-h10
Avex Rivets	h1
Avinox Rivets	h2
SR Rivets	h2
Bulbex Rivets	h3
T-Lok Rivets	h3
Hemlok Rivets	h4
Monobolt Rivets	h5
Avdelok Lockbolts	h6
Maxlok Lockbolts	h7
Avtainer Lockbolts	h8
Camtainer Lockbolts	h9
Nutserts	h10
Avdel Application Tooling	h10-h13
Dow Adhesive Sealants	h14-h21
Betafill	h15
Betalink	h16
Betamate	h17-h18
Betaprime	h19
Betaclean	h20
Consumables	h21
Application Tooling	h22-h23
Adhesive Tapes	h24

CONTENTS

Accuride - telescopic slides	b13-b30
Adhesive sealants	h14-h23
Adhesive tapes	h24
Adjustable gas springs	b10
Adjustable tailboard catch	a18
Air guns - application tooling	h10-h13, h22
Alarms - reversing	b74
Aluminium hinge	a9, c4-c6, c13, c14
Aluminium sections	a40, b65, c5, c6
Angle section	a40, a56
Anti-burst lock	d28-d29, d46-d53
Antiluce fasteners	a1-a3, a10-a11
Anti-slip tape	b44
Application tooling	e28, h10-h13, h22
Applicator - bottle/cap	h22
Applicators - adhesive/sealants	h21-h23
Ascot - hand gun	h23
Ashtrays	b42
Attachment brackets, gas spring	b8-b9
Audible warning devices	b74, f11
Auto-lock safety stay	b3
Avdel - mechanical fasteners	h1-h10
Avdel - tooling	h10-h13
Avdelok - lockbolts	h6
Avex - breakstem rivets	h1
Avinox - breakstem rivets	h2
Avtainer - lockbolts	h8
Backalarm - reversing alarms	b74
Balata belting	e9
Balata washers	a57
Ball race washers	c11
Bansbach - gas springs	b1-b10
Bansbach - linear motion	b11
Battery connectors	b77
Bawer - toolboxes	b61
Beacons - emergency vehicle	f7
Bearers- U Bolts/plates	a57-a58
Bedding sealant - Seamseal	h23
Bell	f11
Bell push button	f11
Betaclean - cleaner/surface preparation	h14, h20
Betafill - polyurethane sealant	h14, h15
Betagun - electric gun	h23
Betalink - polyurethane adhesive	h14, h16
Betamate - polyurethane adhesive	h14, h17, h18
Betapress - hand gun	h22
Betaprime - primer/surface preparation	h14, h19
Betaseal - Polyurethane adhesive	h14, h17, h18
Betawipe - wipe/surface preparation	h14, h20
Body mounting brackets	a44-a58
Bolts - U	a57-a58
Bolts- spring	a35-a39
Bonding adhesives	h14-h18
Bonnet fasteners	b38, b39
Bowden wire release - gas springs	b10
Boxes - tool & fire extinguisher	b69-b71
Brackets - decking	a67
Brackets - locking bar	a24
Brackets - mudguard	g5, g6, g7
Brigade reversing alarms	b74
Brush seals	e40
Budget locks	d18, d19
Buffer strip - door	e38, e39
Buffers - rubber	b57-b64
Bulbex - breakstem rivets	h13
Bulkhead lamp	f1
Bullet hinges	c10, c11
Bus signs	b54
Butt hinges	c2, c3
Cab lamps	f2-f6
Cab lights	f2-f6
Cabin hook	e5
Cabinet hinges	c8-c15
Caged nut	d47
Cages - lamp	f11
Calculation for gas springs	b2
Cam and bracket	a21
Cams	a21, d22, d25, d38, e14-e23
Camtainer - lockbolts	h9
Canopy hinge	c16
Cantilever hinge	c2
Capping	a40
Cargo straps	a60-a62
Cargo track	a64-a65
Carrier - brush seal	e40
Catches - over-centre	a18-a20, b31-b36
Catches - throw-over	a18-a20, b31-b36
Centaflex - continuous hinge	c7
Centoplas - mudguards	g3, g4
Centre pillars/sockets	a1-a4
Cerampro - coating technology	b1
Chain fixing tab	a14
Chains	a41
Channel - flock	e30
Check straps	e8, e9
Chest handle	d45
Chrome hinges	c14
Clamp kits - mudguards	g6, g7
Clamp-glazing	e25
Claw latches	a18-a20
Cleaners - polyurethane	h20
Clearpass - spray suppression	g8
Cleat - lashing	a26, a71
Coach hinges	c3
Coat hooks	b42
Co-axial fan	b49
Compartment latch	d11, d28, d29, d46-d53
Compartment locks	d18, d19, d22-d25
Compression gas springs	b1-b11
Compression locks	d15, d22, d23, d25, d36, d37
Concealed locker hinge	c2
Conical buffers	b57
Connecting rod	e12
Conspicuity tape	f14
Container corner castings	a73
Container door gear	e14-e23
Container door hinges	c22-c27
Container door seal	e38
Continuous hinge	c4-c7
Corner pillars/sockets	a1-a4
Cotter chain tab	a14
Cotter pins	a13-a17
Cup brackets	a67
Curtain tensioners	a59
Curtain-side straps	a62
D buffers	b60
D shackles	a43
Dampers	b1
Darlaston washer	a14
Decking brackets	a67
Diamond grill vent	b45
Disc washer	a56
Dish handles	d15, d24, d27, d35-d37, d45
Door buffer	b64, e38, e39
Door buffer strip	e38-e39
Door dovetail	b64
Door gear	e10-e23
Door gear - emergency	e10-e13
Door gear-container	e14-e23
Door handle-recessed (container)	e19
Door holders/retainers	e1-e7
Door locking systems	d12-d15, d46-d54
Door prop	e2
Door seals	e31-e40
Double coil R clip	a15
Double coil spring cotter	a15
Double knuckle hinge	c4, c6, c12
Double rope hook	a26
Dow - adhesive sealants	h14-h22
Draught excluders	e31-e40
Drawer slides	b13-b30
Drive rod connector	e11
Drive rod end coupling	e13
drive rod mounting bracket	e13
Drive rods	e12, d49, d50-d53
Drop 'T' handle	d15, d36, d37
Dropside system	a1-a3
Easy Motion - hydraulic linear actuation	b11
Easylift gas springs	b1-b10
Edge trim	e36, e37
Electric vents	b48-b50, b52
Emergency door gear	e10-e13

Emergency hammer/holster b67
Emergency stop button d34
End caps a1-a3, a5
End slams d14, d15, e11, e12
Escutcheons d21
Exterior handle d15, d30-d37, d39-d44, d54, e10
Exterior lamps f1, f8-f10
Exterior mirrors b53
Extinguisher - fire b68, b69
Extruded seals e29-e40
Eye - long necked a11
Eye plates a12
Fasteners - antiluce a1-a3, a10, a11
Fasteners - bonnet b38, b39
Fasteners - gravelly b37
Fasteners - locking bar a24
Fasteners - mechanical h1-h10
Fasteners - ramp a27
Fasteners - tailboard a18-a23
Fasteners - toggle b31-b36
Fasteners - tool h10-h13
Fasteners - tool box a32
Fasteners - window e24-e27
Featherwing - mudguards g1, g3
Featherwing - spats g4
Felt applicators h21
Felt pad applicator h21
Felt strip e30
Fender strips b65
Ferry lashing ring a68
Fillerstrip - Glazing e29
Fire extinguisher boxes b69
Fire extinguishers b68, b69
First aid kits b67
Flashing beacons f7
Flat capping a40
Flat cotter pin a13
Flat sponge strip e28
Flettner - rotary vents b47
Flock sprayed channel e30
Flomatic vent b46
Floor lashing rings a68-a71
Floor trap fasteners b41
Fluorescent lamps f4-f6
Flush fitting handles d34-d37, d45, d54
Flush fitting locks d5-d12, d15, d22-d24, d27 d35-d37, d49-d54, e18, e19
Foam tapes h24
Folding steps b43-b44
Forkets-tailboard a23
Foulger ramp spring/tensioner a28
Friction hinge c13, c14
Fridge door latch e6, e7
Fuel filler caps b66
Gas spring attachment brackets b8-b9
Gas spring calculation b2
Gas spring end fittings b3, b5, b7-b9
Gas springs b1-b10
Glazing accessories e28-e30
Glazing channel e29, e30
Glazing clamp e25
Glazing filler-strip e29
Glazing sections e29, e30
Glazing strip e29
Glazing tools e28
Grab handles d39-d45
Gravelly fasteners b37
Grill cover - ventilator b49
Gudgeons a1-a3, a6, a7
Half round section a40
Hammer/holster - emergency b67
Hand cleaner/dispensor h21
Hand cleaner/dispensor h21
Hand tools h10, h13, h22, h23
Handiwash - handwash unit b73
Handle escutcheon d21
Handles - chest d45
Handles - dish d15, d35-d37
Handles - flush fitting d35-d37, d45, d54
Handles - grab d39-d44
Handles - interior d32-d33
Handles - lever d31-d33
Handles - paddle d5-d12, d49-d53
Handles - panel d45
Handles - pull d39-d45
Handles - push button d30, d31
Handles - recessed d15, d33-d37, d45
Handles - 'T' d15, d33-d37, d54
Handles - window e24-e27
Handwash units b72, b73
Hasp & staples b40
Hazchem marker plates b55
Heater - polyurethane h21
Hemlok - breakstem rivets h4
Hi visibility tape b44, f14
Hinge - concealed locker c2
Hinge assemblies a1-a3, a7, c12, c22-c27
Hinge ball race c11
Hinge fixing packs a1-a3, a7
Hinge housing a1-a3, a7
Hinge pegs a1-a3, a7
Hinges a1-a3, a7-a9, c1-c28
Hinges - aluminium a9, c4-c6, c13, c14
Hinges - bullet c10, c11
Hinges - butt c2, c3
Hinges - cabinet c8-c15
Hinges - canopy c16
Hinges - chrome c14
Hinges - coach c3
Hinges - container door c22-c27
Hinges - continuous c4-c7
Hinges - double knuckle c4, c6, c12
Hinges - friction c13, c14
Hinges - lift off c10-c13
Hinges - maintenance free c16
Hinges - mealeable iron c1, c2
Hinges - piano c4
Hinges - plastic c7-c9
Hinges - pressed steel c15-c27
Hinges - rear van door c22-c27
Hinges - self-aligning c1
Hinges - spade a9
Hinges - straight a8
Hinges - swept a9
Hinges - tail lift c21
Hinges - triple knuckle c12
Hinges - van door c20-c27
Hinges - weld-on a8, a9, c1-c4, c10-c12, c21
Hinges - window e24, e25
Hinges, stainless steel c4, c10, c11, c13, c15, c17-c27
Hit & miss vent b45
Hitch - trailer a32
Holder - licence b56
Hooks - coat b42
Hooks - locking bar a24
Hooks - rope a25-a26
Hooks - with spring a42
Hooks for toggle catches b31-b36
Horizontal centre slam e11
Horizontal end slam e11, e12
Hydraulic release - gas springs b10
Insert - thimble d38
Inside locking lever d50, d51
Interior handles d31-d33, d38-d45
Interior roof lamps f2-f6, f12-f13
Internal panic release button d34
Internal tracking a64-a65
J section a40
Jagalok - dropside system a1-a3
Lamp cages f11
Lamps - bulkhead f1
Lamps - exterior f1, f8-f10
Lamps - fluorescent f4-f6
Lamps - interior roof f2-f6
Lamps - marker f8-f10
Lamps - number plate f1
Lamps - outline f8-f10
Lamps - LED f12-f13
Lashing cleat a26
Lashing rings a68-a71
Latch - pull in e6, e7
Latches d11, d22-d24, d28, d29, d46-d54

Latches - quarter turn d25
LED Lamps f12-f13
Lever handles d31-d33, d35, d50
Licence holders b56
Lid stays b12
Lift - off hinges a1-a3, a7-a9, c10-c13
Lifting lugs a34
Lightweight tailboard catch a18-a20
Linch pin & wire tag a16
Linch pins a13-a17
Linear motion b11
Linear slides b1-b30
Load restraint straps a60-a62
Lockable gas springs b10
Lockbolts - Avdelok h6
Lockbolts - Avtainer h8
Lockbolts - Camtainer h9
Lockbolts - Maxlok h7
Locker hinge c2
Locking bar fittings a23-a24
Locking handles d30-d37
Locks - luggage compartment d5-d11, d18, d19, d22-d25, d36, d46-d54
Locks - anti burst d11, d28-d30, d46-d54
Locks - budget d18, d19
Locks - compartment d22-d25
Locks - paddle d5-d11, d49-d53
Locks - rod d12-d15
Locks - slam d1-d11, d16, d17, d26-d29, d46-d53, e6, e7
Locks - sliding doors d26, d27
Long handle hand tool h13
Long necked eye a11
Louvre vents b45
Luggage compartment lock d5-d11, d18, d19, d22-d25, d28, d35-d37, d49-d53
Luggage straps a60-a62
Lugs - lifting a34
Lugs - tailboard a24
Magnetic catch e2
Maintenance free hinge c16
Malleable iron hinges c1
Marker lamps f8-f10
Marker plates/boards b54, b55
Matting - rubber b64
Maxlok - lockbolts h7
Mechanical release - gas springs b10
Metal profiles a40
Mini paddle lock d10
Mirrors b53
Monobolt - breakstem rivets h5
MOT holder b56
Motorised retractable step b44
Motorised vents b48-b50, b52
Mudflaps g8
Mudguard stays/brackets g5-g7
Mudguards g1-g4
nGenesis - air tools h11, h12
Nozzles h21
Number plate holders b55, b56
Number plate lamps f1
Nutserts/application tooling h10
Ojop - battery connectors b77
Ojop - overcentre fasteners b31-b34
Outline lamps f8-f10
Outline tape f14
Oval buffers b58
Oval paddle lock d9
Over-centre catches a18-a21, b31-b36
Overcentre fasteners b31-b36
Overcentre latches a18-a21
Overcentre tailboard catches a18-a21
Pacet - roof ventilators b50
Paddle handles/locks d5-d11, d27, d49-d53
Padlockable lever handle d31
Panel handles d45
Parlok - mudgards g2
Parlok/Kover - toolboxes b70
Perfectpower - voltage inverter b76
Perfectview - reversing camera b75
Piano hinge c4
Pillars - centre/corner a1-a4
Pin & chain - locking bar a22
Pins - retaining a13-a17, a23
Pin-shoulder a22
Pin-stanchion a11
Pin-towing a33
Pipe pins a17
Plant-on door gear e20-e23
Plant-on tailboard catch a18-a20
Plastic cleat a26
Plastic hinges c7-c9
Plug bolts - slotted a13
Pneumatic tooling h10-h13, h22
Pole cups a67
Polypropylene boxes b69-b71
Polyurethane - adhesive sealants h14-h20
Polyurethane - cleaners h20
Polyurethane - primers h20
Pop rivets h1-h5
Pop-up 'T' handle d32, d52
Pressed steel hinges c15-c27
Pressure release valve b3
Primers - polyurethane adhesives h19
Printed rubber mudflaps g8
Pull handles d39-d45
Pull-in latch e6, e7
Push button handles d22-d24, d30, d31, d34, d54
Quarter turn locks d25
R clip a15
Ramp fasteners a27
Ramp springs a28-a31
Rear marker plates b54, b55
Rear van door hinges c20-c27
Recessed door gear e18, e19
Recessed door handle - container e18, e19
Recessed door retainer e1
Recessed handles d15, d35-d37, d45
Recessed lashing rings a68-a70
Recessed step b43
Recessed tailboard catch a18
Reflective tape f14
Reflectors f11
Refrigerator door latch/lock e6, e7
Refrigerator lamp f6
Retainers - door e1-e7
Retaining bracket - locking bar a22
Retaining pins a13-a17, a23
Retractable steps b44
Reversing alarms b74
Reversing camera b75
Rings - welded a14
Riveting tools h11-h13
Rivets h1-h5
Rivets - Avex h1
Rivets - Avinox h2
Rivets - bulbex h3
Rivets - Hemlok h4
Rivets - Monobolt h5
Rivets - sealed SR h2
Rivets - t-lok h3
Rod clip d51
Rod locks d12-d15
Roller buffers b61-b63
Roof lamps f2-f6
Roof light/vents/hatches b51,b52
Roof vents b46-b52
Rope grips a43
Rope hooks a25-a26
Rotary vents b46-b50
Rotolok spring bolts a37
Rotor latches d11, d28, d29, d46-d48
Round buffers b57
Round Cotter Pins a13-a17
Rubber bonnet fasteners b38, b39
Rubber buffers b57-b64
Rubber door holders/retainers e2
Rubber matting b64
Rubber mudflaps g8
Saddle brackets g7
Sausage heater - polyurethane h21
School bus signs b54
Sealants h15
Seals - brush e40

www.albert-jagger.co.uk Walsall: 01922 471000 Heywood: 01706 692110 Romsey: 01794 525870

Seals - door e31-e40
Seals - extruded e31-e40
Seals - waist e30
Seamseal - bedding sealant h23
Seat fittings - tip-up b41
Self adhesive sponge strip h24
Self aligning hinges c1
Series 500 door retainers e1
Shackles - D a43
Shaft locking pins a17
Shoot bolts a37-a39
Shoring bars/poles a66
Shoulder pin a22
Shutter hasp & staple b40
Side & tailboard fittings a18-a24
Side moulding - self adhesive c7
Side mounted ramp spring a29
Side tbe seal e33-e35
Side window handle e24, e27
Sideguard system - legs/rail a5
Skeleton hand gun h23
Skip fittings - lugs/springs a34
Slam bolts d16, d17
Slam latches d11, d28, d29, d46-d53
Slam locks d1-d11, d16, d17, d22-d24, d26-d29, d46-d53 e6, e7
Slams d1-d3, d16, d17
Slides - three beam b16-b30
Slides - two beam b14, b15, b20
Sliding door gear d27
Sliding door locks d26, d27
Sliding window stops e26
Slig - hand cleaner h21
Slotted plug bolts a13
Slotted vent b45
Snapfast tailboard fastener a20
Sockets - centre/corner a1-a4
Solid top vent b46
Spade hinges a9
Spares - Jagalok a2-a3
Sponge strip e28
Spray suppression - mudflaps g8
Spring -Body mounting a56
Spring bolts/covers a35-a39
Spring bonnet fasteners b39
Spring cotter a15-a17
Spring hooks a42
Spring pins a14-a17
Springs - ramp a28-a31
Springs - skip a34
Square buffers b59
SR - sealed rivets h2
Stainless steel door gear e14, e16-e19
Stainless steel gas springs b1
Stainless steel hinges c4, c10, c11, c13, c15, c17-c27
Stainless steel lever handle d31
Stainless steel lid stay b12
Stanchion pin a11
Staple - checkstrap e9
Staple - ironwork a23
Stays - mudguard g5
Stays - telescopic b12
Steps - recessed/folding/motorised b43, b44
Stirker plate d19
Straight hinges - ironwork a8
Strap assemblies a60-a62
Strap winch a63
Straps - cargo a60-a62
Striker bolts d11, d26, d28, d29, d47
Strikers d4
Support stays b1-b10, b12
Swept hinges - ironwork a9
Sword pins a14
Tab washer a14
Tabs - locking bar a24
Tail lift hinge c21
Tailboard buffers b57-b59
Tailboard cam bracket a21
Tailboard catches/fasteners a18-a21
Tailboard forkets a23
Tailboard lugs a22-a23
Tailboard staple a23
Tapes - adhesive h24
Teal - handwash units b72
Tee handles d15, d33-d37, d54
Tee keys d20
Telescopic slides b13-b30
Telescopic stays b12
Thimble insert d38
Three beam slides b16-b30
Throw-over catches a18-a20
Tie-down rings a68-a71
Tila - continuous hinge c5
Tip up seat fittings b41
Tipper pad b64
T-lok - breakstem rivets h3
Toggle catches/fasteners b31-b36
Tool box fastener a32
Tool boxes b70, b71
Toolbox hinge a32
Tools - adhesive/sealants h22, h23
Tools - fastener h10-h13
Tools - glazing e28
Top hat buffers b58
Top leaf seal e33-e36
Top tube seal e31-e33
Torsion ramp spring a31
Towing ball a33
Towing hitches a32-a33
Towing jaw a33
Towing pin a33
Track - cargo a64-a65
Traction gas springs b1
Trailer fittings a32-a33
Trailer hitch a33
Trailer latch - Trimark d47
Transporter winches a63
Trap door fastener b41
Travel trailer lock/latch d49
Treadplate a40
Trimark - handles, locks & latches d1, d31, d34, d46-d53
Triple knuckle hinge c12
Trombone door retainers e5
Turnbuckle assembly a32
Twist locks a72
Twisted snap hook a63
Two beam slides b14, b15, b20
U Bolt bearer plates a57
U bolts a57-a58
Underfloor lashing rings a70
Underfloor ramp spring a30
Underfloor steps b44
Unifix - mudguard bracket clamps g6
Uni-lok overcentre fastener a20
Universal door gear e14-e23
Van door hinges c20-c27
Vanguard - sliding door lock d27
Ventilators b45-b52
Vertical end slams e12
Voltage inverter b76
VTG plate holders b56
Waist seal e30
Warning devices - audible b74, f11
Warning light e13
Wash units, hand b72, b73
Washer - disc a56
Washers - balata a57
Weatherproof paddle lock d8
Weatherstrip e30
Webbing winch a63
Wedge action handle - plastic e27
Welded rings a14
Weld-on hinges c1-c4, c10-c12, c21
Wheel chocks b78, b79
Winches - transporter a63
Window channel e29, e30
Window fasteners e24-e27
Window fittings e24-e27
Window handle e24, e26, e27
Window hinge e24, e25
Window stop e26
Wing spats g4
Wing stays/brackets g5, g6, g7
Wings g1-g4

BE61/0611	h2	01890/60009	h9	0288/004	b41	0745/001	d19	0853/003	a39	0898/1316	a41
BE61/0614	h2	01890/60050	h9	0404/001	f2	0745/002	d19	0853/004	a39	0898/1321	a41
BE61/0618	h2	01901/70610	h7	0404/002	f2	0746/003	d18	0853/011	a39	0898/1326	a41
BF01/0523	h3	01901/70620	h7	0404/501	f2	0746/004	d18	0854/003	d41	0898/1419	a41
BF01/0619	h3	01901/70810	h7	0404/502	f2	0747/001	d18	0855/001	c3	0898/1426	a41
BF01/0625	h3	01901/70820	h7	0405/001	f2	0747/002	d18	0855/002	c3	0898/1521	a41
BF01/0630	h3	01903/70610	h7	0405/002	f2	0748/001	d18	0856/002	d44	0898/1528	a41
BM01/0512	h3	01903/70810	h7	0407/001	f3	07486/09601	h10	0857/1000	d36	0898/1624	a41
BM01/0614	h3	01903/70820	h7	0430/001	c3	07486/09602	h10	0857/2005	d36	0898/1633	a41
BM01/0620	h3	01981/70600	h7	0430/002	c3	0750/002	d18	0859/001	c2	0898/1642	a41
H2740009	b67	01981/70800	h7	0430/005	c3	0752/001	d18	0859/002	c2	0898/16536	a41
H2740010	b67	0213/001	f3	0440/002	c3	0752/002	d18	0860/001	d2	0898/1738	a41
H274A144	b67	02221/0812	h4	0458/0061	b44	0754/001	d18	0860/002	d2	0898/1842	a41
H5930085	b52	02221/0813	h4	0458/0067	b44	0754/002	d18	0862/001	e9	0898/22514	a41
H5930100	b52	02221/0814	h4	0486/3425	d42	07540/0002	h13	0863/101	d37	0898/2316	a41
H593A492	b51	02221/0815	h4	0486/3633	d45	0756/001	d18	0863/102	d37	0898/2419	a41
H593A493	b51	02221/0817	h4	0486/3644	d42	0756/002	d18	0863/111	d37	0898/2521	a41
H593B006	b51	02221/0819	h4	0486/3765	c13	0761/001	d40	0863/112	d37	0898/32517	a41
H593B021	b51	02221/0821	h4	0486/3766	c13	0761/002	d40	0864/1000	d15	0898/3321	a41
H593B022	b51	02311/1209	h8	0486/3797	d42	0762/002	c2	0864/2000	d15	0899/12514	a41
H593C151	b51	02311/1210	h8	0486/3856	c12	0768/001	d40	0865/1000	d15	0899/12519	a41
H593C152	b51	02311/1211	h8	0486/3858	c12	0770/001	d13	0865/2000	d15	0899/1316	a41
H593C153	b51	02311/1212	h8	0486/3860	a36	0770/002	d13	0865/3000	d15	0899/1321	a41
H593C156	b51	02311/1213	h8	0486/3861	a36	0770/011	d13	0865/4000	d15	0899/1326	a41
H593C158	b51	02311/1214	h8	0486/3862	a36	0771/001	d13	0877/001	d10	0899/1419	a41
H593P500	b51	02311/1215	h8	0486/3863	a36	0771/002	d13	0881/510	d12	0899/1426	a41
SR01/3212	h2	02311/1216	h8	0486/4136	c14	0774/001	e2	0883/010	d12	0899/1521	a41
SR01/4011	h2	02311/1217	h8	0486/4146	c13	0775/001	e2	0883/510	d12	0899/1528	a41
SR01/4080	h2	02311/1218	h8	0486/4148	c14	0776/001	e2	0891/001	d3	0899/1624	a41
SR01/4811	h2	02311/1219	h8	0498/001	e1	0777/001	e2	0891/002	d3	0899/1633	a41
SR01/4812	h2	02311/1220	h8	0500/003	e1	0778/001	e2	0891/005	d3	0899/1642	a41
SR01/4814	h2	02311/1221	h8	0500/004	e1	0779/001	d18	0891/006	d3	0899/1738	a41
SR01/4818	h2	02311/1222	h8	0500/005	e1	0779/001	d19	0892/001	a32	0899/1842	a41
0076/001	d40	02321/1200	h8	0535/019	e38	0782/001	e9	0892/006	a32	0899/22514	a41
0080/001	d43	02325/1200	h8	0535/0191	e38	0782/002	e9	0896/12514	a41	0899/2316	a41
0080/002	d43	02611/70601	h6	0535/021	e38	0783/001	e8	0896/12519	a41	0899/2419	a41
0080/003	d43	02611/70602	h6	0535/030	e38	0783/002	e8	0896/1316	a41	0899/2521	a41
0080/101	d43	02611/70603	h6	0535/0531	e38	0783/003	e8	0896/1321	a41	0899/32517	a41
0080/102	d43	02611/70604	h6	0535/083	e38	0783/006	e8	0896/1326	a41	0899/3321	a41
0097/001	d40	02611/70605	h6	0535/145	e38	0783/009	e8	0896/1419	a41	08999/16536	a41
0097/003	d40	02611/70606	h6	0535/165	e38	0783/270	e8	0896/1426	a41	0907/001	d5
0098/001	d40	02611/70607	h6	0538/3674	e2	0786/001	d40	0896/1521	a41	0907/003	d5
0099/001	d39	02611/70802	h6	0538/4015	e2	0786/002	d40	0896/1528	a41	0907/005	d5
0111/004	a43	02611/70803	h6	0541/001	e4	0790/001	d41	0896/1624	a41	0907/010	d5
0111/006	a43	02611/70804	h6	0541/002	e4	0810/001	d24	0896/1633	a41	0907/011	d5
0111/008	a43	02611/70805	h6	0550/001	e5	0810/002	d24	0896/1642	a41	0907/014	d5
0111/009	a43	02611/70806	h6	0551/001	e5	0832/1030	a38	0896/16536	a41	0907/015	d5
0125/001	d18	02611/70807	h6	0553/001	e5	0833/001	a39	0896/1738	a41	0907/018	d6
0130/001	d21	02611/70808	h6	0554/001	e5	0834/010	a37	0896/1842	a41	0907/019	d6
0130/003	d21	02611/70809	h6	0555/001	e3	0834/020	a37	0896/22514	a41	0907/202	d5
0142/001	a21	02611/70810	h6	0555/002	e3	0835/002	e5	0896/2316	a41	0907/210	d5
0142/002	a21	02611/70813	h6	0555/003	e3	0835/003	e5	0896/2419	a41	0907/211	d5
0143/001	a21	02611/71006	h6	0555/004	e3	0836/001	a35	0896/2521	a41	0907/213	d5
0147/001	c14	02611/71007	h6	0556/001	e3	0837/001	a36	0896/32517	a41	0907/510	d5
0148/001	c14	02611/71009	h6	0623/001	b46	0837/010	a36	0896/3321	a41	0907/511	d5
01604/0412	h1	02612/70603	h6	0623/002	b46	0837/011	a36	0897/12514	a41	0907/514	d5
01604/0514	h1	02612/70604	h6	0623/003	b46	0837/020	a36	0897/12519	a41	0907/518	d6
01604/0615	h1	02612/70606	h6	0638/004	b52	0838/001	a38	0897/1316	a41	0907/519	d6
01604/0621	h1	02612/70804	h6	0638/005	b52	0838/0011	a38	0897/1321	a41	0910/410	d7
01624/0411	h1	02612/70805	h6	0650/001	a19	0838/0012	a38	0897/1326	a41	0910/411	d7
01624/0514	h1	02662/70600	h6	0650/021	a19	0838/0013	a38	0897/1419	a41	0910/415	d7
01624/0612	h1	02662/70800	h6	0650/022	a19	0838/002	a37	0897/1426	a41	0910/417	d7
01624/0616	h1	02662/71000	h6	0660/001	b37	0838/0021	a37	0897/1521	a41	0910/418	d7
01641/0613	h1	02682/70600	h6	0660/002	b37	0838/004	a37	0897/1528	a41	0910/430	d7
01641/0621	h1	02682/70800	h6	0660/101	b37	0839/001	a35	0897/1624	a41	0910/431	d7
01641/0631	h1	02682/71000	h6	0660/202	b37	0839/002	a35	0897/1633	a41	0910/433	d7
01661/0410	h1	02711/0613	h5	0662/001	b37	0839/100	a35	0897/1642	a41	0912/401	d5
01661/0414	h1	02711/0617	h5	0666/001	e2	0840/001	a35	0897/16536	a41	0912/405	d6
01661/0512	h1	02711/0817	h5	0666/002	e2	0840/002	a35	0897/1738	a41	0912/410	d5
01661/0516	h1	02771/0613	h5	071203/02000	h12	0841/001	a35	0897/1842	a41	0912/411	d5
01661/0613	h1	02771/0617	h5	071213/02000	h12	0842/001	a35	0897/22514	a41	0912/418	d6
01661/0619	h1	02771/0817	h5	071223/02000	h12	0843/001	a35	0897/2316	a41	0912/419	d6
01661/0621	h1	02771/0824	h5	071234/02000	h12	0845/001	d39	0897/2419	a41	0912/710	d5
01661/0631	h1	02774/0613	h5	07220/00100	h13	0846/001	d39	0897/2521	a41	0913/010	d5
01883/80500	h9	02774/0617	h5	074200/12000	h10	0847/001	d41	0897/32517	a41	0916/3070	d11
01883/82920	h9	02774/0817	h5	0744/601	d19	0847/003	d41	0897/3321	a41	0916/3071	d11
01883/83000	h9	02774/0824	h5	0744/602	d19	0853/001	a39	0898/12514	a41	0930/001	b46
01890/59000	h9	0288/003	b41	0744/604	d19	0853/002	a39	0898/12519	a41	0930/002	b46

0931/001	d28	1056/799	a17	1245/7463	b4	1247/8243	b6	1260/7164	b4	1298/305	b20
0931/002	d28	1056/806	a17	1245/7481	b4	1247/8261	b6	1260/7166	b4	1298/356	b20
0931/003	d28	1056/808	a17	1245/7483	b4	1247/8263	b6	1260/7168	b4	1298/406	b20
0931/005	d28	1056/810	a17	1245/7501	b4	1247/8281	b6	1260/7170	b4	1298/457	b20
0948/002	c16	1056/811	a17	1245/7503	b4	1247/8283	b6	1260/7172	b4	1298/508	b20
0948/003	c16	1056/901	a16	1245/7521	b4	1247/8291	b6	1260/7174	b4	1298/559	b20
0948/004	c16	1056/902	a16	1245/7523	b4	1247/8293	b6	1260/7176	b4	1298/609	b20
0948/006	c16	1056/903	a16	1245/7541	b4	1247/8301	b6	1260/7178	b4	1298/660	b20
0948/020	c16	1057/001	a69	1245/7543	b4	1247/8303	b6	1260/7180	b4	1298/711	b20
0956/003	c3	1057/007	a70	1245/7561	b4	1249/8321	b7	1260/7182	b4	1305/300	b22
0969/002	a8	1057/011	a69	1245/7563	b4	1249/8323	b7	1260/7184	b4	1305/350	b22
0969/012	a8	1057/0115	a69	1245/7581	b4	1249/8341	b7	1260/7186	b4	1305/400	b22
0973/001	c24	1057/013	a69	1245/7583	b4	1249/8343	b7	1260/7188	b4	1305/450	b22
0973/0011	c24	1058/001	a70	1245/7601	b4	1249/8361	b7	1260/7190	b4	1305/500	b22
0973/002	c24	1060/001	a68	1245/7603	b4	1249/8363	b7	1260/7192	b4	1305/550	b22
0973/011	c24	1060/002	a68	1245/7621	b4	1250/8361	b7	1260/7194	b4	1305/600	b22
0973/200	c24	1061/001	a70	1245/7623	b4	1250/8363	b7	1260/7196	b4	1305/660	b22
0973/201	c24	1062/001	a71	1245/7641	b4	1250/8371	b7	1260/7198	b4	1305/711	b22
0974/001	b43	1067/001	a34	1245/7643	b4	1250/8373	b7	1260/7200	b5	1307/4571	b30
0977/002	e15	1068/001	a34	1245/7661	b4	1250/8381	b7	1260/7202	b5	1307/4572	b30
0979/004	b43	1068/002	a34	1245/7663	b4	1250/8383	b7	1260/7204	b5	1307/6001	b30
0979/005	b43	1069/001	a68	1245/7681	b4	1250/8401	b7	1260/7206	b5	1307/6002	b30
0979/006	b43	1072/001	a8	1245/7683	b4	1250/8403	b7	1260/7208	b5	1307/9001	b30
0980/001	b43	1073/002	a22	1245/7701	b4	1250/8421	b7	1260/7210	b5	1307/9002	b30
0987/006	b42	1074/005	a33	1245/7703	b4	1250/8423	b7	1260/7212	b5	1308/030	b29
0991/001	c3	1074/007	a33	1245/7721	b4	1250/8441	b7	1260/7214	b5	1308/350	b29
1000/001	a9	1074/0071	a33	1245/7723	b4	1250/8443	b7	1260/7216	b5	1308/400	b29
1000/002	a9	1074/0072	a33	1245/7741	b4	1250/8461	b7	1260/7218	b5	1308/450	b29
1000/003	a9	1074/014	a16	1245/7743	b4	1250/8463	b7	1260/7220	b5	1308/500	b29
1000/004	a9	1078/001	a21	1245/7761	b5	1250/8481	b7	1260/7222	b5	1308/550	b29
1002/011	a8	1078/002	a21	1245/7763	b5	1250/8483	b7	1260/7224	b5	1308/600	b29
1002/013	a8	1078/003	a21	1245/7781	b5	1250/8501	b7	1260/7226	b5	1308/700	b29
1002/014	a8	1079/001	a32	1245/7783	b5	1250/8503	b7	1260/7228	b5	1308/790	b29
1002/015	a8	1085/001	d8	1245/7801	b5	1251/02	b4	1260/7236	b6	1309/0300	b18
1002/016	a8	1090/001	d8	1245/7803	b5	1251/02	b5	1260/7238	b6	1309/0301	b18
1002/017	a8	1103/001	a19	1245/7821	b5	1251/02	b5	1260/7240	b6	1309/0302	b19
1002/018	a8	1103/002	a19	1245/7823	b5	1251/02	b6	1260/7242	b6	1309/0350	b18
1002/111	a8	1103/011	a19	1245/7841	b5	1251/04	b5	1260/7244	b6	1309/0351	b18
1002/113	a8	1-15/001	e14	1245/7843	b5	1251/06	b5	1260/7246	b6	1309/0352	b19
1002/114	a8	1-15/002	e14	1245/7861	b5	1251/14	b5	1260/7248	b6	1309/0400	b18
1004/001	a26	1-15/005	e14	1245/7863	b5	1251/24	b5	1260/7250	b6	1309/0401	b18
1016/001	a6	1152/001	d22	1245/7881	b5	1251/26	b5	1260/7252	b6	1309/0402	b19
1016/002	a6	1152/002	d22	1245/7883	b5	1251/30	b3	1260/7254	b6	1309/0450	b18
1016/003	a6	1191/13001	d22	1245/7901	b5	1251/30	b3	1260/7256	b6	1309/0451	b18
1018/001	a13	1191/13002	d22	1245/7903	b5	1251/32	b3	1260/7258	b6	1309/0452	b19
1021/001	a26	1191/13051	d22	1245/7921	b5	1251/34	b7	1260/7259	b6	1309/0500	b18
1021/011	a26	1191/13052	d22	1245/7923	b5	1251/34	b7	1260/7260	b6	1309/0501	b18
1021/101	a26	1192/0534	d23	1245/7941	b5	1251/44	b7	1260/7268	b7	1309/0502	b19
1022/001	a25	1199/001	d37	1245/7943	b5	1252/48	b3	1260/7270	b7	1309/0550	b18
1032/001	a9	1201/001	d34	1245/7961	b5	1252/48	b3	1260/7272	b7	1309/0551	b18
1032/002	a9	1223/155	b69	1245/7963	b5	1252/50	b3	1260/7276	b7	1309/0552	b19
1034/001	a9	1224/100	b69	1245/7981	b5	1252/52	b5	1260/7277	b7	1309/0552	b19
1035/001	a13	1225/003	b68	1245/7983	b5	1252/54	b4	1260/7278	b7	1309/0600	b18
1036/001	a6	1225/004	b68	1245/8001	b5	1252/54	b5	1260/7280	b7	1309/0601	b18
1037/002	a6	1225/006	b68	1245/8003	b5	1252/54	b5	1260/7282	b7	1309/0602	b19
1037/003	a6	1225/007	b68	1245/8021	b5	1252/54	b6	1260/7284	b7	1309/0650	b18
1037/006	a7	1225/010	b68	1245/8023	b5	1252/54	c2	1260/7286	b7	1309/0651	b18
1037/010	a6	1225/1000	b69	1245/8041	b5	1252/55	b9	1260/7288	b7	1309/0652	b19
1042/001	a6	1230/10220	b67	1245/8043	b5	1252/56	b7	1260/7290	b7	1309/0702	b19
1042/002	a6	1230/10221	b67	1247/8061	b6	1252/56	b7	1295/1250	b15	1309/1000	b29
1048/001	a68	1231/0010	e2	1247/8063	b6	1253/58	b3	1295/1300	b15	1309/1100	b29
1048/002	a68	1240/7301	b3	1247/8081	b6	1253/60	b5	1295/1350	b15	1309/1148	b17
1049/003	a71	1240/7303	b3	1247/8083	b6	1253/62	b7	1295/1400	b15	1309/1199	b17
1049/004	a71	1240/7321	b3	1247/8101	b6	1256/2440	b50	1295/1450	b15	1309/1250	b17
1054/001	a9	1240/7323	b3	1247/8103	b6	1256/66	b5	1295/1500	b15	1309/1300	b17
1055/2054	a14	1240/7341	b3	1247/8121	b6	1256/68	b7	1295/1550	b15	1309/1350	b17
1055/3080	a14	1240/7343	b3	1247/8123	b6	1258/01	b8	1295/1600	b15	1309/1400	b17
1055/3092	a14	1245/7361	b4	1247/8141	b6	1258/02	b8	1295/1650	b15	1309/1450	b17
1055/4100	a14	1245/7363	b4	1247/8143	b6	1258/021	b8	1295/1700	b15	1309/148	b17
1056/001	a16	1245/7381	b4	1247/8161	b6	1258/03	b8	1297/257	b14	1309/1500	b17
1056/002	a16	1245/7383	b4	1247/8163	b6	1258/04	b9	1297/305	b14	1309/1550	b17
1056/003	a16	1245/7401	b4	1247/8181	b6	1258/05	b9	1297/355	b14	1309/1600	b17
1056/004	a16	1245/7403	b4	1247/8183	b6	1258/904	b9	1297/406	b14	1309/1650	b17
1056/1006	a16	1245/7421	b4	1247/8201	b6	1260/7152	b3	1297/508	b14	1309/1650	b17
1056/1008	a16	1245/7423	b4	1247/8203	b6	1260/7154	b3	1297/558	b14	1309/1700	b17
1056/1010	a16	1245/7441	b4	1247/8221	b6	1260/7156	b3	1297/610	b14	1309/199	b17
1056/797	a17	1245/7443	b4	1247/8223	b6	1260/7160	b4	1297/660	b14	1309/250	b17
1056/798	a17	1245/7461	b4	1247/8241	b6	1260/7162	b4	1297/711	b14	1309/300	b17

1309/350	b17	1318/660	b26	1441/300	b66	2063/002	d27	2190/15010	h21	2218/001	c16
1309/400	b17	1318/711	b26	1920/012	b73	2064/001	d27	2190/20010	h21	2218/002	c16
1309/450	b17	1319/10161	b28	1920/024	b73	2071/001	e26	2190/20011	h21	2218/003	c16
1309/500	b17	1319/10661	b28	1920/112	b73	2071/100	e26	2190/218376	h19	2219/004	c10
1309/550	b17	1319/12191	b28	1920/124	b73	2073/002	d1	2190/227936	h20	2219/005	c10
1309/600	b17	1319/15241	b28	1929/101	b72	2092/003	d26	2190/26180	h21	2219/006	c11
1309/650	b17	1319/3041	b28	1929/1010	b72	2092/004	d26	2190/286529	h17	2219/007	c10
1309/700	b17	1319/3551	b28	1942/0012	b72	2092/005	d26	2190/286529	h18	2219/008	c11
1309/900	b29	1319/4061	b28	1942/0024	b72	2092/006	d26	2190/286530	h17	2219/009	c11
1310/150	b16	1319/4571	b28	1942/012	b72	2092/013	d26	2190/286530	h18	2219/010	c11
1310/200	b16	1319/5081	b28	1942/024	b72	2094/200	a27	2190/40015	h19	2219/0160	c10
1310/250	b16	1319/5581	b28	1978/002	c21	2094/201	a27	2190/40151	h20	2220/002	c11
1310/300	b16	1319/6091	b28	1999/0100	e14	2094/201	a27	2190/40525	h19	2220/003	c11
1310/350	b16	1319/6601	b28	1999/018	e14	2094/330	a27	2190/40641	h20	2220/004	c11
1310/400	b16	1319/7111	b28	1999/018	e22	2094/330	a27	2190/40654	h20	2220/005	c11
1310/450	b16	1319/7621	b28	1999/019	e16	2094/330	a27	2190/40806	h19	2220/006	c11
1310/500	b16	1319/8121	b28	1999/019	e23	2094/340	a27	2190/40868	h19	2220/007	c11
1310/550	b16	1319/8631	b28	1999/02500	e16	2094/340	a27	2190/49107	h20	2227/2000	c6
1311/304	b24	1319/9141	b28	1999/2010N10	e16	2096/0001	a31	2190/49110	h20	2227/2001	c6
1311/356	b24	1338/001	b35	1999/2010N20	e16	2096/0002	a31	2190/60003	h21	2227/2500	c6
1311/406	b24	1338/002	b35	1999/25660	e17	2096/002	a31	2190/60018	h21	2227/2501	c6
1311/457	b24	1338/003	b35	1999/2588	e16	2096/003	a31	2190/60024	h21	2227/3000	c6
1311/508	b24	1338/004	b35	1999/3000	e17	2096/004	a31	2190/60041	h21	2227/3001	c6
1311/559	b24	1346/001	c8	1999/3500	e17	2096/005	a31	2190/60228	h21	2229/2200	c5
1311/609	b24	1346/003	c8	2000/2000	e15	2096/006	a31	2190/79110	h20	2229/2240	c5
1311/660	b24	1346/004	c8	2000/2000MN	e15	2096/007	a31	2190/79150	h20	2229/2270	c5
1311/711	b24	1346/006	c8	2004/100	e14	2097/002	a31	2190/79200	h21	2229/2300	c5
1312/300	b21	1346/007	c8	2017/001	c21	2097/003	a31	2190/79208	h21	2229/9220	c5
1312/350	b21	1347/9463	c9	2017/002	c21	2098/001	a34	2190/85108	h17	2229/9240	c5
1312/400	b21	1349/001	c8	2022/001	b58	2098/002	a34	2190/85108	h18	2229/9270	c5
1312/450	b21	1349/002	c8	2023/002	b58	2103/001	a28	2190/85470	h17	2229/9300	c5
1312/500	b21	1349/003	c8	2023/101	b58	2103/002	a28	2190/85470	h18	2231/020	c7
1312/550	b21	1349/004	c8	2025/001	b57	2104/001	a28	2190/85813	h17	2231/025	c7
1312/600	b21	1349/011	c8	2026/001	b57	2104/002	a28	2190/85813	h18	2231/030	c7
1312/700	b21	1349/012	c8	2026/002	b57	2104/003	a28	2190/87133	h15	2231/120	c7
1313/305	b25	1349/013	c8	2026/004	b57	2104/005	a28	2190/87206	h16	2231/125	c7
1313/355	b25	1350/002	c9	2028/001	b57	2104/006	a28	2190/87210	h16	2231/130	c7
1313/406	b25	1350/002	e25	2028/003	b57	2106/001	a30	2190/87338	h15	2233/012	c4
1313/457	b25	1350/003	e25	2028/005	b57	2106/002	a29	2190/87500	h15	2233/020	c4
1313/508	b25	1350/004	e24	2035/001	a43	2106/003	a29	2190/87520	h15	2233/023	c4
1313/558	b25	1350/051	e25	2035/002	a43	2114/001	a26	2190/87523	h15	2233/041	c4
1313/609	b25	1350/052	e25	2035/003	a43	2115/001	d3	2190/87551	h15	2233/067	c4
1313/682	b25	1350/053	e24	2051/300	c26	2115/002	d3	2190/87556	h15	2233/075	c4
1313/711	b25	1350/053	e25	2051/311	c26	2115/003	d3	2192/002	h23	2233/080	c4
1316/0304	b27	1350/054	e24	2051/400	c26	2115/004	d3	2211/001	c12	2233/220	c4
1316/0355	b27	1350/054	e25	2051/411	c26	2116/001	a25	2211/002	c12	2233/241	c4
1316/0406	b27	1350/055	e24	2052/002	c25	2121/001	d2	2211/003	c12	2233/316	c4
1316/0457	b27	1350/056	e24	2052/006	c25	2121/002	d2	2211/004	c12	2233/323	c4
1316/0508	b27	1350/056	e25	2052/0076	c24	2121/003	d2	2212/003	c1	2233/439	c4
1316/0558	b27	1350/057	e25	2052/100	c24	2121/004	d2	2212/004	c1	2233/623	c4
1316/0609	b27	1350/062	e24	2052/102	c24	2125/001	a25	2214/001	c12	2233/679	c4
1316/0660	b27	1350/063	e25	2052/103	c24	2125/002	a25	2214/002	c12	2234/2500	c4
1316/0711	b27	1350/064	e24	2052/300	c25	2125/003	a25	2214/003	c12	2234/4000	c4
1316/0762	b27	1350/064	e25	2052/311	c25	2125/013	a25	2214/505	c13	2234/5000	c4
1316/0812	b27	1350/065	e24	2052/400	c25	2127/001	a25	2214/5051	c13	2234/5700	c4
1316/0863	b27	1350/065	e25	2053/135	e7	2127/002	a25	2216/001	c17	2234/6300	c4
1316/0914	b27	1350/066	e24	2053/190	e6	2127/102	a25	2216/003	c17	2234/7600	c4
1316/1016	b27	1350/067	e24	2053/191	e6	2131/005	a4	2216/004	c17	2244/101	d24
1316/1066	b27	1350/067	e25	2053/192	e6	2131/006	a4	2216/005	c17	2244/102	d24
1316/1219	b27	1350/068	e24	2053/193	e6	2132/003	e3	2216/006	c15	2245/101	d24
1316/1524	b27	1350/069	e24	2053/194	e6	2132/004	e3	2216/007	c15	2245/102	d24
1316/254	b27	1350/070	e24	2054/007	c24	2132/1000	e3	2216/101	c17	2257/001	d20
1317/305	b23	1351/001	e27	2056/0003	a27	2169/001	h23	2216/102	c17	2257/003	d20
1317/356	b23	1351/002	e27	2056/100	a27	2171/002	b41	2216/103	c17	2257/004	d20
1317/406	b23	1351/200	e26	2056/100	a27	2172/002	b41	2217/001	c10	2261/001	d4
1317/457	b23	1356/001	e24	2056/101	a27	2173/001	e9	2217/002	c10	2268/001	d4
1317/508	b23	1356/002	e24	2056/101	a27	2180/001	e9	2217/003	c10	2276/001	d4
1317/559	b23	1356/003	e25	2056/200	a27	2189/042	h22	2217/0031	c10	2280/001	d32
1317/610	b23	1356/057	e25	2056/201	a27	2189/046	h22	2217/004	c10	2280/002	d32
1317/660	b23	1356/058	e24	2056/201	a27	2189/110	h21	2217/005	c10	2280/003	d32
1317/711	b23	1357/001	e27	2056/220	a27	2189/240	h21	2217/006	c10	2295/001	d21
1318/305	b26	1357/002	e27	2056/221	a27	2189/73116	h22	2217/008	c10	2296/001	d21
1318/356	b26	1357/010	e27	2056/221	a27	2189/95034	h22	2217/010	c10	2296/002	d21
1318/406	b26	1440/100	b66	2056/223	a27	2189/95042	h22	2217/011	c11	2298/002	d14
1318/457	b26	1440/200	b66	2056/224	a27	2189/95046	h23	2217/024	c10	2298/003	d14
1318/508	b26	1440/300	b66	2057/301	c26	2189/95051	h23	2217/025	c10	2298/004	d14
1318/559	b26	1441/100	b66	2057/401	c26	2189/95150	h22	2217/026	c10	2298/006	d14
1318/610	b26	1441/200	b66	2063/001	d27	2189/95167	h23	2217/028	c10	2312/001	a15

2312/002	a15	2538/006	b47	2676/001	b35	3000/5762	a62	3113/001	a12	4171/001	d38
2312/003	a15	2538/007	b47	2676/002	b35	3000/5763	a62	3147/001	f3	4206/001	d39
2312/004	a15	2538/008	b47	2676/003	b35	3000/5803	a61	3202/001	d35	4207/001	d39
2313/020	a15	2538/0081	b47	2676/004	b35	3000/581	a61	3202/002	d35	4212/001	d35
2313/030	a15	2539/012	b50	2678/001	g8	3000/5811	a60	3202/003	d35	4212/002	d35
2313/040	a15	2539/024	b50	2678/002	g8	3000/5811	a61	3202/004	d35	4212/707	d35
2313/050	a15	2539/512	b49	2678/003	g8	3000/584	a61	3204/002	d38	4218/001	d33
2313/060	a15	2540/1240	b50	2678/004	g8	3000/5849	a61	3204/003	d38	4222/101	d31
2400/001	d2	2540/2440	b50	2678/005	g8	3000/586	a61	3214/001	e29	4222/202	d31
2400/002	d2	2541/021	b48	2678/006	g8	3000/586	a61	3214/002	e29	4222/303	d31
2410/001	d2	2541/023	b48	2678/007	g8	3000/586	a62	3215/001	e29	4222/404	d31
2410/002	d2	2541/1010	b49	2678/008	g8	3000/5861	a61	3216///0521	e28	4222/414	d31
2448/001	a4	2541/201	b49	2678/009	g8	3000/5861	a61	3216/0321	e28	4222/505	d31
2448/002	a4	2541/203	b49	2678/010	g8	3000/5861	a61	3216/050	e28	4222/515	d31
2448/003	a4	2541/301	b48	2678/011	g8	3000/5865	a62	3216/055	e28	4222/606	d31
2448/004	a4	2541/303	b48	2678/012	g8	3000/5865	a62	3216/0701	e28	4222/606	d33
2463/001	e38	2541/352700	b49	2678/212	g8	3000/587	a62	3216/0721	e28	4222/606	d34
2463/002	e38	2541/412	b48	2678/214	g8	3000/5875	a62	3216/078	e28	4222/707	d31
2464/001	e39	2541/424	b48	2678/219	g8	3000/5876	a62	3216/0791	e28	4223/101	d33
2464/002	e39	2548/001	b45	2678/224	g8	3000/5877	a67	3217/001	e28	4228/001	d38
2467/001	d17	2548/002	b45	2678/422	g8	3000/5878	a67	3232/001	a10	4229/001	d33
2467/002	d17	2550/1240	b50	2678/624	g8	3000/58781	a67	3236/001	e29	4229/002	d33
2468/002	b64	2550/2440	b50	2678/698	g8	3000/58782	a67	3240/001	e28	4229/003	d33
2468/003	b64	2556/001	b42	2678/700	g8	3000/5879	a67	3243/001	a10	4229/401	d33
2475/001	d16	2556/002	b42	2678/815	g8	3000/5880	a67	3244/001	a10	4232/001	e9
2477/001	d16	2560/1240	b50	2678/823	g8	3000/5881	a67	3245/001	a10	4232/6168	e9
2480/002	e39	2582/002	a13	2678/824	g8	3000/5882	a67	3261/001	a10	4279/001	e9
2482/001	d17	2582/003	a13	2682/106	e5	3000/5883	a61	3263/001	a10	4280/001	b43
2500/002	b58	2582/007	a13	2682/108	e5	3000/5883	a61	3265/001	a10	4291/001	c1
2502/0100	b59	2605/001	a6	2695/003	b36	3000/5886	a62	3274/001	a10	4291/002	c1
2502/0200	b59	2605/011	a6	2710/003	a63	3000/590	a64	3275/001	a10	4307/0021	b64
2502/0300	b59	2609/001	a13	2710/004	a63	3000/591	a64	3281/001	a10	4326/002	f1
2502/0400	b59	2614/001	a42	2710/005	a63	3000/5910	a64	3284/001	a11	4343/002	d32
2502/0500	b59	2614/002	a42	2712/003	a63	3000/5911	a64	3285/001	a10	4450/001	b64
2503/001	b59	2614/003	a42	2712/005	a63	3000/5932	a66	3285/032	a10	4455/003	b45
2503/002	b59	2614/004	a42	2712/006	a63	3000/5933	a66	3289/001	a10	4457/004	b45
2503/003	b59	2614/005	a42	2767/001	b53	3000/5934	a66	3304/001	e28	4468/001	b46
2503/004	b59	2614/006	a42	2813/001	a40	3000/5935	a66	3309/001	a10	4529/002	b39
2503/005	b59	2614/007	a42	2869/001	a40	3000/5936	a66	3319/001	e29	4532/0021	b64
2503/006	b59	2614/014	a42	2880/001	a40	3000/594	a64	3325/001	a11	4618/002	f1
2511/002	b60	2614/0141	a42	2881/001	d38	3000/5941	a65	3327/001	a11	4618/003	f1
2511/007	b60	2614/017	a42	2927/004	a40	3000/595	a65	3330/047	a11	4656/012	f2
2512/031	b60	2614/018	a42	2948/101	b40	3000/596	a65	3330/061	a11	4767/001	e31
2515/0400	b61	2614/019	a42	2948/102	b40	3000/597	a65	3330/095	a11	4800/002	f11
2515/0401	b61	2619/001	a57	2950/001	b40	3000/5983	a66	3333/003	b53	4800/005	f11
2515/1403	b61	2619/002	a57	2950/002	b40	3000/5984	a66	3333/043	b53	4805/005	f11
2515/1404	b61	2619/004	a57	2987/005	b42	3000/5988	a66	3364/001	e29	4810/001	f11
2516/001	b62	2622/002	a58	3000/5102	a60	3003/002	d27	3389/003	b53	4811/001	b54
2516/002	b62	2622/003	a58	3000/5103	a60	3020/6240	g4	3389/043	b53	4812/001	b54
2516/003	b62	2622/004	a58	3000/5104	a60	3020/7330	g4	3390/003	b53	4813/001	b54
2516/004	b62	2622/005	a58	3000/5180	a60	3020/8290	g4	3390/043	b53	4814/001	b54
2516/011	b62	2622/006	a58	3000/5182	a60	3021/060	g3	3396/0100	b53	4815/001	b54
2516/011	b62	2622/007	a58	3000/5183	a61	3021/070	g3	3396/0200	b53	4815/002	b54
2516/011	b63	2622/008	a58	3000/5331	a61	3021/080	g3	3987/001	a22	4816/001	b55
2516/011	b63	2622/009	a58	3000/5332	a61	3021/090	g3	3987/002	a22	4816/002	b55
2516/012	b62	2622/010	a58	3000/5339	a61	3027/005	g6	3987/003	a22	4816/003	b55
2516/013	b62	2622/011	a58	3000/5441	a61	3029/4660	g5	4031/001	a57	4816/004	b55
2516/014	b62	2622/012	a58	3000/5511	a62	3029/5550	g5	4032/001	a14	4820/001	b54
2516/015	b62	2622/013	a57	3000/5521	a62	3029/5650	g5	4032/003	a14	4820/261A1	b54
2516/016	b62	2622/014	a58	3000/56241	a60	3029/7800	g5	4034/001	a57	4820/262A1	b54
2516/016	b62	2622/015	a58	3000/56242	a60	3030/021	g7	4044/004	a24	4820/263A1	b54
2516/017	b62	2622/016	a58	3000/56250	a60	3030/022	g7	4044/005	a24	4820/264A1	b54
2516/018	b63	2628/003	a4	3000/56251	a60	3047/001	b56	4047/001	a24	4820/265A1	b54
2516/018	b63	2639/002	a13	3000/56251	a60	3047/002	b56	4047/002	a24	4820/266A1°Í	b54
2516/019	b63	2645/001	a12	3000/5626	a60	3049/001	b56	4048/001	a22	4820/508	f14
2516/019	b63	2660/001	a42	3000/56260	a60	3049/002	b56	4048/003	a23	4820/509	f14
2516/022	b63	2663/0100	b36	3000/56261	a60	3051/001	b56	4048/004	a22	4820/510	f14
2516/033	b63	2663/0101	b36	3000/56267	a60	3055/001	b56	4048/007	a22	4820/511	f14
2522/001	b12	2663/0101	b36	3000/56268	a60	3093/001	a13	4050/002	a24	4820/512	f14
2522/008	b12	2663/7040	b36	3000/56402	a62	3106/001	a12	4051/001	a23	4833/003	e31
2522/305	b12	2665/001	b35	3000/5645	a62	3106/002	a12	4051/003	a23	4833/0032	e31
2522/500	b12	2665/002	b35	3000/56491	a62	3106/011	a12	4051/004	a23	4844/001	e36
2527/004	b47	2665/003	b36	3000/573	a61	3106/012	a12	4051/005	a23	4845/001	e36
2527/005	b47	2665/004	b35	3000/573	a62	3107/021	a12	4051/007	a23	4855/002	e33
2527/006	b46	2665/011	b35	3000/573	a62	3107/022	a12	4109/001	a24	4855/004	e33
2527/007	b46	2665/012	b35	3000/5732	a61	3107/031	a12	4109/002	a24	4873/001	e31
2538/001	b47	2665/013	b36	3000/5732	a61	3107/032	a12	4150/003	a24	4873/003	e31
2538/003	b47	2665/014	b35	3000/5762	a62	3108/001	a12	4150/004	a24	4885/001	e33

4886/001	e33	5563/001	a72	5637/005	f5	6302/001	e35	6514/101	f8	7201/004	e11
4896/002	e36	5565/001	a72	5639/002	f6	6305/001	e35	6514/102	f8	7202/001	e11
4901/001	e36	5570/001	a73	5640/001	f5	6311/2255	e40	6521/004	f7	7202/002	e11
4922/001	e36	5570/002	a73	5640/002	f5	6311/2385	e40	6526/001	f7	7202/003	e11
4942/001	e36	5570/004	a73	5641/001	f4	6311/2505	e40	6528/001	f7	7202/004	e11
4945/001	e36	5570/005	a73	5650/001	f4	6311/2755	e40	6529/001	f7	7203/001	e10
4945/005	e37	5589/00406	d8	5652/001	f4	6311/31015	e40	6562/1010	b74	7203/002	e10
4946/002	e36	5589/0100	d36	5660/001	f12	6311/3255	e40	6562/109	b74	7204/001	e10
4949/002	e37	5589/0200	d36	5661/001	f12	6311/3385	e40	6563/097	b74	7204/002	e10
4965/001	e37	5589/0300	d9	5662/001	f12	6311/3505	e40	6777/001	g1	7205/001	e12
4967/004	e34	5589/0400	d9	5663/001	f12	6311/3645	e40	6777/0035	g7	7205/002	e12
4969/001	e37	5589/0500	d9	5664/001	f13	6311/3755	e40	6777/0037	g7	7205/003	e12
4974/003	e31	5589/0600	d9	5665/001	f13	6312/1155	e40	6777/0042	g7	7205/004	e12
4977/002	e37	5589/0700	d8	5666/001	f13	6312/225	e40	6777/0044	g7	7205/005	e12
5010/001	e30	5589/0800	d8	5667/001	f13	6312/325	e40	6777/050	g1	7205/006	e12
5048/001	e29	5589/180	d12	6031/015	a57	6313/225	e40	6777/075	g1	7205/008	e12
5059/001	e30	5589/200	d19	6031/016	a57	6313/325	e40	6777/1000	g1	7205/009	e12
5092/001	e29	5589/201	d19	6033/007	a53	6314/225	e40	6777/1050	g1	7205/050	e13
5092/460	e29	5589/212	d12	6033/022	a55	6314/325	e40	6777/1100	g1	7205/051	e13
5130/001	e30	5589/216	d13	6033/023	a52	6316/001	e35	6777/1110	g3	7205/052	e13
5134/002	e30	5589/218	d13	6033/024	a50	6317/001	e35	6777/1300	g1	7205/100	e13
5139/004	e30	5589/223	d28	6033/026	a50	6318/001	e31	6777/200	g1	7205/200	e13
5142/001	e30	5589/2231	d16	6033/028	a52	6319/001	e35	6777/250	g1	7206/001	e12
5149/001	e30	5589/2232	d16	6033/030	a54	6320/001	e33	6777/3032	g4	7206/002	e12
5178/001	e30	5589/224	d1	6033/111	a53	6320/050	e33	6777/350	g1	7666/002	b65
5199/001	e30	5589/225	d1	6033/113A	a52	6323/001	e33	6777/4035	g4	7666/003	b65
5224/001	d34	5589/226	d1	6033/113AA	a55	6324/002	e31	6777/430	g3	7666/005	b65
5224/002	d34	5589/227	d1	6033/113GA	a50	6325/001	e33	6777/440	g3	7666/015	b65
5224/006	d34	5589/353	d35	6033/113J	a56	6326/001	e35	6777/450	g1	7666/101	b65
5240/0508	e37	5589/355	d35	6033/113MA	a51	6328/001	e35	6777/4540	g4	7666/102	b65
5240/0509	e37	5589/365	d32	6033/113NA	a51	6371/001	e28	6777/5250	g4	7666/103	b65
5240/0910	e37	5589/370	d32	6033/113S	a52	6372/001	e28	6777/6050	g4	7666/103A	b65
5240/0911	e37	5589/375	d35	6033/113T	a53	6373/001	e28	6777/650	g3	7666/104	b65
5240/0912	e37	5589/378	d35	6033/113U	a55	6374/001	e28	6777/6550	g4	7666/105	b65
5241/7614	e34	5589/409	d31	6033/113V	a55	6375/001	e28	6777/6960	g4	7666/124	b65
5241/7615	e34	5589/414	d43	6033/113Y	a51	6376/001	e28	6777/750	g1	8051/001	b56
5241/7634	e32	5589/415	d43	6033/126A	a46	6377/001	e28	6777/800	g1	9031/001	f11
5241/7635	e32	5589/515	a71	6033/126F	a46	6378/001	e28	6777/850	g1	9041/001	f11
5244/2000	e37	5589/540	d37	6033/126I	a46	6379/001	e28	6777/875	g3	9100/102C	b31
5244/3000	e37	5589/548	d37	6033/126J	a46	6380/001	e28	6781/00354	g6	9100/103C	b31
5245/3621	e34	5589/549	d37	6033/1375	a44	6381/001	e28	6781/00424	g6	9100/10C	b32
5245/3623	e32	5589/576	d35	6033/138	a44	6382/001	e28	6786/404	g2	9100/10CSS	b32
5245/3625	e34	5589/609	d15	6033/1395	a45	6436/010	b78	6786/405	g2	9100/15C	b32
5245/3631	e34	5589/610	d15	6033/1405	a45	6436/020	b78	6786/450	g2	9100/16C	b33
5245/3633	e32	5589/611	d15	6033/141	a44	6437/001	b78	6786/455	g2	9100/17C	b33
5245/3635	e34	5589/612	d15	6033/150	a48	6437/002	b79	6786/500	g2	9100/202C	b31
5290/001	f11	5590/0133	e31	6033/151	a48	6437/004	b79	6786/540	g2	9100/203C	b31
5290/002	f11	5591/271	a14	6033/152	a48	6452/03012	h24	6786/550	g2	9100/20C	b33
5290/003	f11	5591/272	a14	6033/153	a48	6452/03019	h24	6786/610	g2	9100/20CSS	b33
5290/101	f11	5591/275	a14	6033/154	a49	6452/03025	h24	6786/650	g2	9100/20CSS	b34
5300/001	b38	5596/400	d45	6033/155	a49	6452/06019	h24	6786/6506	g2	9100/22C	b33
5301/001	b39	5596/402	d45	6033/156	a49	6452/06025	h24	6786/670	g2	9100/30C	b32
5301/003	b39	5596/403	d45	6033/157	a49	6452/06050	h24	6786/680	g2	9100/30CSS	b32
5302/001	b38	5596/410	d45	6033/158	a48	6469/05012	h24	6789/1000	b70	9100/31C	b32
5303/001	b38	5596/412	d45	6033/4040	a56	6476/00426	h24	6789/1001	b70	9100/31CSS	b32
5310/0100	d24	5599/018	b77	6033/5050	a56	6484/01625	h24	6789/5041	b70	9100/403C	b31
5310/0200	d24	5599/019	b77	6033/729	a47	6505/003	f11	6789/5042	b70	9100/403CSS	b31
5326/003	b44	5599/021	b77	6033/733	a46	6505/004	f11	6789/5043	b70	9100/41BLK	b34
5327/001	b44	5608/002	f5	6033/734	a46	6505/005	f11	6789/660	b70	9100/41C	b33
5327/201	b44	5609/001	f6	6033/735	a47	6505/006	f11	6789/661	b70	9100/41CSS	b33
5339/001	b55	5609/002	f6	6033/751	a54	6505/009	f11	6789/800	b70	9100/41CSS	b34
5341/010	b56	5610/001	f4	6033/753	a54	6505/010	f11	6789/801	b70	9100/503C	b31
5341/020	b56	5610/002	f4	6033/754	a54	6510/101	f10	6794/0600	b71	9100/50C	b32
5403/1622	g8	5611/001	f6	6033/755	a54	6511/001	f10	6794/1000	b71	9100/50CSS	b32
5403/1822	g8	5611/002	f6	6035/001	a56	6511/003	f10	6801/003	a5	9100/701LC	b32
5403/2422	g8	5612/001	f4	6035/002	a56	6511/004	f10	6801/005	a5	9100/701LCSS	b32
5403/2448	g8	5612/002	f4	6212/0011	d35	6511/005	f10	6802/100	a5	9100/701SC	b32
5403/2622	g8	5612/003	f4	6212/0021	d35	6512/0001	f9	6802/200	a5	9100/701SCSS	b32
5403/2648	g8	5612/004	f4	6239/001	e32	6512/0002	f9	6803/3400	a5	9100/702LC	b32
5444/001	b65	5613/001	f3	6241/001	e34	6512/0003	f9	7024/001	a23	9100/702LCSS	b32
5444/002	b65	5614/021	f6	6244/001	e32	6512/0004	f9	7100/002	a11	9100/702SC	b32
5444/003	b65	5614/024	f6	6272/001	e34	6512/0011	f9	7101/001	a11	9100/702SCSS	b32
5444/004	b65	5615/024	b76	6278/001	e32	6512/0012	f9	7198/001	c15	9100/7031	b34
5482/011	a18	5637/001	f5	6279/001	e35	6513/0001	f10	7200/001	e10	9100/703RC	b33
5484/010	a18	5637/002	f5	6279/902	e35	6513/0011	f10	7200/002	e10	9100/703RCSS	b33
5484/011	a18	5637/0021	f5	6288/001	e32	6514/001	f8	7200/003	e10	9100/703RLC	b33
5561/002	a72	5637/003	f5	6288/002	e32	6514/002	f8	7201/001	e11	9100/703RLSS	b33
5561/003	a72	5637/004	f5	6300/001	e33	6514/003	f8	7201/003	e11	9100/703TLC	b33

9209/001	a59
9209/002	a59
9212/001	a59
9212/002	a59
9212/005	a59
9212/006	a59
9212/201	a59
9212/202	a59
9300/001	d30
9300/002	d30
9300/003	d30
9300/006	d30
9300/016	d30
9301/001	d29
9301/002	d29
9301/011	d29
9301/012	d29
9301/015	d29
9301/025	d29
9301/101	d11
9301/101	d29
9304/001	d30
9304/002	d30
9304/2000	d30
9304/2001	d30
9306/1829	d51
9310/010	d28
9310/011	d28
9341/004	e7
9341/005	e7
9500/1000	d1
9500/1001	d1
9500/2102	d48
9500/2103	d48
9500/2104	d48
9500/2105	d48
9500/2106	d48
9500/2107	d48
9500/2201	d46
9500/2202	d46
9500/2211	d46
9500/2212	d46
9500/2221	d46
9500/2221	d52
9500/2222	d46
9500/2222	d52
9500/2231	d46
9500/2232	d46
9500/2241	d46
9500/2242	d46
9500/2500	d47
9500/2501	d47
9500/2502	d47
9500/2503	d47
9500/4000	d50
9500/4001	d50
9500/5001	d46
9500/5002	d46
9500/5104	d31
9500/5105	d31
9500/6003	d53
9500/7401	d52
9500/7402	d52
9500/77011	d49
9500/77021	d49
9500/7703	d49
9500/7704	d49
9500/79011	d49
9500/79031	d49
9500/7911	d49
9500/7920	d49
9500/79401	d49
9500/8101	d34
9500/8101	d54
9500/8102	d34
9500/8102	d54
9500/8104	d54
9500/8121	d34
9500/8121	d54
9500/9100	d47
9500/9100	d48
9500/9100	d50
9500/9101	d47
9500/9102	d47
9500/9102	d52
9500/9200	d52
9500/9301	d47
9500/93010	d50
9500/93011	d50
9500/9321	d52
9500/9322	d52
9500/9323	d51
9500/9324	d51
9500/9500	d38
9500/9500	d54
9500/97101	d51
9500/97102	d51
9500/97103	d50
9500/97104	d50
9500/9900	d52
9530/0520	d23
9530/0523	d23
9634/250	b75
9635/020	b75
9705/30600	b52
9705/5000	b52
9705/6000	b52
9705/905000E	b52
9705/906000E	b52
9790/000	d22
9790/002	d22
9790/004	d22
9790/005	d22
9790/008	d22
9790/010	d22
9790/012	d22
9790/014	d22
9790/102	d22
9790/104	d22
9790/106	d22
9790/107	d22
9790/108	d22
9790/110	d22
9790/112	d22
9800/2056	d1
9800/3830	d16
9800/4136	d41
9800/4137	d41
9800/4138	d44
9800/4139	d44
9800/4140	d44
9800/4141	d44
9800/4142	d44
9800/4144	d44
9800/4145	d44
9800/4150	d41
9800/4151	d44
9810/0029	e18
9810/0035	e18
9810/0242	e20
9810/0245	e18
9810/0245	e19
9810/0245	e20
9810/0245	e21
9810/0248	e22
9810/0255	e18
9810/0278	e23
9810/1633	e21
9810/2550	e19
9810/2900	e19
9810/3140	d10
9810/3150	d10
9810/3350	e4
9810/3370	e4
9810/3390	e4
9810/511	c27
9810/512	c27
9810/513	c27
9810/514	c27
9810/515	c23
9810/516	c23
9810/5180	c27
9810/5190	c27
9810/5200	c27
9810/5210	c27
9810/5240	c27
9810/5270	c27
9810/5340	c23
9810/5350	c23
9810/5380	c23
9810/5390	c23
9810/542	c22
9810/5460	c22
9810/5480	c22
9810/5520	c22
9810/5520	c23
9810/5520	c27
9810/5530	c23
9810/5530	c27
9810/57000	c23
9810/57001	c23
9810/571	c22
9810/57100	c22
9810/57101	c22
9810/572	c22
9810/573	c23
9810/574	c23
9810/57400	c23
9810/57401	c23
9810/57500	c22
9810/57501	c22
9810/57800	c23
9810/57801	c23
9810/57901	c22
9810/57902	c22
9810/57902	c23
9810/57903	c22
9810/57903	c23
9810/6130	c21
9810/6140	c21
9810/6141	c21
9810/6150	c19
9810/6160	c19
9810/6170	c19
9810/6180	c19
9810/6191	c20
9810/6200	c20
9810/6201	c20
9810/6290	c20
9810/6300	c20
9810/6310	c18
9810/6320	c18
9810/6330	c18
9810/63301	c15
9810/6340	c18
9810/6350	c17
9810/6360	c17
9820/1061	c18
9820/1062	c18
9820/1151	c18
9820/1153	c18
9820/1180	c20
9820/1181	c20
9820/1182	c20
9820/1183	c20
9820/6150	c19
9820/6170	c19
9820/6290	c20
9820/63301	c15
9827/6200	a20
9827/6201	a20
9827/6203	a20
9922/101	b64
9922/103	b64
9922/201	b64
9933/1115	a2
9933/1118	a2
9933/1215	a2
9933/1218	a2
9933/1224	a2
9934/0900	a7
9934/0901	a2
9934/0901	a3
9934/0901	a7
9934/0902	a2
9934/0902	a3
9934/0902	a7
9934/0903	a3
9934/0910	a2
9934/0910	a3
9934/0911	a2
9934/0912	a2
9934/0913	a2
9934/0921	a2
9934/0921	a3
9934/0921	a11
9934/0925	a2
9934/1115	a2
9934/1118	a2
9934/1124	a2
9934/1233	a2
9934/1233	a2
9934/1233	a3
9934/1315	a2
9934/1318	a2
9934/1324	a2
9934/1642	a2
9934/1642	a3
9934/1652	a2
9934/1652	a3
9934/1716	a2
9934/1716	a3
9934/1719	a2
9934/1719	a3
9934/1725	a2
9934/1725	a3
9934/1816	a2
9934/1816	a3
9934/1819	a2
9934/1819	a3
9934/1825	a2
9934/1825	a3

GENERAL

1. In these conditions.
(a) Albert Jagger Limited is called 'the Company' and the individual, firm, company or other party with whom the Company contracts is called 'the Customer'.
(b) 'Goods' means the goods, articles and materials which are to be supplied by the Company pursuant to the Contract (as herein after defined):
(c) Special Goods' means goods made or adapted specifically to the Customer's designs and specifications.
(d) 'Services' shall include any design or other services to be provided by the Company pursuant to the Contract whether in relation to the supply of goods or otherwise and where the Contract is for or includes work or work and materials, the supply of labour;

2 (a) Any quotation or estimate given by the Company is an invitation to the Customer to make an offer only and no order of the Customer placed with the Company in pursuance of a quotation or estimate or otherwise shall be binding on the Company unless and until it is accepted by the Company;
(b) Any contract howsoever made, between the Company and the Customer ('the Contract') shall incorporate and be subject to these Conditions and receipt of goods or services by the Customer shall be deemed to be conclusive proof that the Customer has accepted these Conditions in the absence of any express or other implied acceptance of these Conditions by the Customer:
(c) Without prejudice to the generality of the foregoing all other terms and Conditions except those implied in favour of a seller which are not inconsistent with these Conditions whether or not the same are endorsed upon, delivered with or referred to in any purchase order or any other document delivered or sent by the Customer to the Company are expressly excluded. Any reference in the Contract to the Customer's order specification or like document will not be deemed to imply that any terms or conditions endorsed upon, delivered with or referred to such order, specification or like document will have effect.

PRICES

3 Unless otherwise provided in the Contract:-
(a) The price of the goods does not include the cost of cases or other packing materials which shall remain the property of the Company and will be returnable at the Customer's expense at the request of the Company. Any such cases or packing materials not returned by the Customer within thirty days of such request shall be paid for by the Customer at their then value;
(b) The price of the goods and services is exclusive of Value Added Tax, which will be charged at the rate applicable at the appropriate tax point;
(c) The price of the goods does not include the cost of carriage to the contracted place of delivery nor does it include the cost of off-loading the goods which shall be arranged by the Customer and per formed at his risk and expense. If the Customer instructs the Company to send the goods by passenger train, parcel post, air freight or other special transport the additional cost will be for the account of the Customer.
(d) If after the date of the Company's acceptance of order any increase occurs in the costs necessarily incurred by the Company in supplying the goods, and/or services including but not limited to goods, materials, labour, transport or other items including overheads which the Company has to pay or incur in the performance of the Contract, then, the amount of any increase in such costs shall be added to the Contract price. A certificate of the Company's auditor's certifying the amount of such increase shall be conclusive and binding on the Customer and the Company.
Where the price has been quoted in the Company's quotation or estimate based on stated production runs and specific delivery periods, the Company reserves the right to vary the price for the goods should the Customer order different quantities from those stated and/or require delivery over a different period;
(f) The cost of any variation or modification in the design, specification, materials or drawings of the goods or services, or any development thereof requested by the Customer after the date of the Company's acceptance of order shall, if such variations or modifications are accepted by the Company, be borne by the Customer.

DELIVERY AND RISK

4 (a) Delivery of the goods shall be made to the Customer at the place specified in the Contract or as subsequently agreed between the parties and the risk in respect of all goods shall pass to the Customer at the time of delivery. If no place for delivery is specified or agreed, delivery shall take place at the Company's works immediately prior to loading for despatch to the Customer. Notwithstanding such delivery, the property in and title to the goods shall not pass to the Customer except as provided in Condition 5. Where the Company does not deliver on its own transport and unless otherwise agreed in writing, the Company shall on behalf of the Customer and the Customer's expense arrange for the carriage of the goods and the carrier selected by the Company shall be the agent of the Customer. Special notice is directed to the fact that in accordance with the provisions of Section 32 of the Sale of Goods Act 1979 delivery to the carrier will, in such circumstances constitute delivery to the Customer;
(b). If delivery is to be made at the premises of the Company's warehousemen or other bailee, delivery shall be deemed to have been made by the delivery to the Customer by the Company of an order on, or by the transfer to the Customer of the warrant of such warehouse-man or bailee for the release or delivery of the goods:
(c). The Company shall be entitled to make delivery of the goods by installments and to invoice the Customer for each installment dispatched;
(d) Where damage to or loss of the goods occurs before delivery thereof to the Customer the Company undertakes (subject as provided below) to replace or (at its discretion) to repair free of charge any goods so damaged or lost in which event the time for delivery of the damaged or lost goods shall be extended for such period as the Company shall reasonably require for such replacement or repair. The foregoing undertaking of the Company is conditional upon :-
(i) the Customer giving written notice of such damage or loss with reasonable particulars there of to the Company and to the carrier (if other than the Company) within seven days of the receipt of the goods or in the case of total loss within three days of receipt of the Company's or the carrier's delivery advice or other notification of despatch; and
(ii) the Customer is requested by the Company and at the Customer's cost returning damaged goods to the Company's works within one month of receipt thereof;
(e) Where the goods are not manufactured or supplied directly by the Company and are delivered direct to the Customer or collected by the Customer from the manufacturer or supplier the Company shall not be liable for any damage to or loss of the goods whatsoever or whensoever occurring;
(f) Save as expressly provided in this Condition, the Company shall not have any liability whatsoever for or in connection with any damage to or loss of the goods in transit to the contracted place of delivery.

TITLE

5 (a) Title to and property in the goods shall remain vested in the Company (notwithstanding the delivery of possession of the same and the passing of the risk therein to the customer) until;
(i) the price of the goods and/or services comprised in this contract; and
(ii) all other money due from the Customer to the Company on any other account has been paid or satisfied in full.
(b) Until the title to and property in the goods pass to the Customer as aforesaid the following provisions shall apply:
(1) The Company may at any time without prior notice to the Customer repossess and resell the goods if any of the events specified in Condition 18 hereof shall occur or if any sum owed by the Customer to the Company under this or any such other Contract is not paid on the due date for payment. For the purpose of exercising its rights under this sub-paragraph (1) the Company, its employees or agents together with all vehicles and plant considered by the Company to be necessary shall be entitled at any time without prior notice to the Customer to free and unrestricted entry upon the Customer's premises and/or other locations where any of the goods are situated.
(2) The Customer shall store the goods in a proper manner without charge to the Company and ensure that they are clearly identified as belonging to the Company. Without prejudice to sub-paragraph (1) of this Condition, the Company shall be entitled to examine the goods in storage at any time during normal business hours and upon giving the customer reasonable notice of its intention to do so.
(3) The rights and remedies conferred upon the Company by this Condition 5 are in addition to and shall not in any way prejudice, limit or restrict any other rights or remedies of the Company under the Contract.

PERFORMANCE

6 (a) The Company will use its reasonable endeavours to comply with any date or dates for despatch or delivery of the goods and for the supply or completion of the services (as the case may be) as stated in the Contract, but unless the Contract otherwise expressly provides such date or dates shall constitute only statements of expectation and shall not be binding. If the Company having used its reasonable endeavours fails to despatch or deliver the goods or to supply or complete the services by such date or dates, such failure shall not constitute a breach of the Contract nor shall the Customer be entitled to treat the Contract as thereby repudiated or to rescind it or any related contract in whole or in part or claim compensation for such failure or for any consequential loss or damage resulting therefrom;
(b) If the Company is prevented or hindered from performing the Contract or any part thereof by any circumstances beyond its reasonable control including (but without limiting the generality of the fore going) strikes, lock-outs or other industrial action, inability to obtain materials or labour, power or machinery breakdown or failure, fire, flood, civil commotion or any cause of whatsoever kind and whenever occurring, further performance of the Contract shall be suspended for so long as the Company is so prevented or hindered provided that if the performance of the Contract is suspended for more than three consecutive calendar months the Customer shall be entitled by notice in writing to the Company forthwith to terminate the Contract or to cancel any outstanding part thereof and in such circumstances the Customer shall pay at the Contract rate for all goods and services supplied and materials used by the Company to the actual date of such termination. The Company shall not have any liability to the Customer for any direct or consequential loss or damage suffered by the Customer as a result of the Company's inability to perform its obligations under the Contract by reason of any such circumstances;
(c) Where goods are delivered or services are supplied by installments each such by installment shall be deemed to be sold or supplied under a separate contract to which these Conditions shall apply (mutatis mutandis) and save as provided in Condition 9 (d) no default in respect of any one installment shall affect or prejudice due performance of the Contract as regards any other installments;
(d) Where goods are to be supplied or delivered by the Company in accordance with periodic delivery schedules or similar notification of the delivery requirements of the Customer, the customer shall not be entitled to cancel or vary any such delivery schedule or requirement which is expressed by the Customer to be a firm requirement without the prior written consent of the Company and the Company shall be entitled to reimbursement of any additional costs and expenses incurred or suffered as a result of such cancellation or variation;
(e) When expedited delivery or completion is agreed to by the Company and necessitates overtime or other additional costs, the Customer shall reimburse the Company for the amount of such overtime payment or other costs. Where postponement of delivery or completion is agreed by the Company the customer shall, if required by the Company pay all costs and expenses (including a reasonable charge for storage and insurance of the goods and interest on the contract price) occasioned thereby but the goods shall be held at the Customer's risk as from the time of postponement;
(f) If performance of the Contract is suspended at the request of or delayed through default of the Customer including (without prejudice to the generality of the foregoing) lack of,incomplete or incorrect instructions or refusal to collect or accept delivery of the goods or services for a period of thirty days, the Company shall be entitled to payment at the Contract rate for services already per formed, goods supplied or ordered and any other additional costs thereby incurred including storage insurance and interest PROVIDED THAT if the customer fails to collect or accept delivery of the goods or any part thereof within 28 days of written notification from the Company that the goods are ready for collection or delivery, the Company shall be entitled (without prejudice to its other remedies under the Contract for such breach) to sell or at its option destroy the goods and to apply the proceeds of sale thereof if sold and the scrap value if destroyed towards payment of all sums due to the Company under the Contract;
(g) The Company shall be entitled without the prior approval of the Customer to assign, sub-contract or sub-let the Contract or any part thereof, but the Customer shall not be so entitled without the prior approval of the Company.

ACCEPTENCE

7 (a) Without prejudice to the Customer's rights under Condition 12, the Customer shall be deemed to have accepted the goods as being in conformity with the Contract and shall be bound to pay for them, unless written notice of rejection thereof is received by the Company within thirty (30) days of delivery. Save in the circumstances referred to in Condition 12 goods accepted by the Customer can not subsequently be returned and any claim which the Customer might otherwise have shall be deemed to have been waived;
(b) If after notice of rejection has been given, the customer deals with the goods as owner thereof or if any conduct of the Customer is inconsistent with such rejection or with the ownership of the goods by the Company, the Customer shall be deemed to have accepted the goods and be bound to pay for them.

REFERENCES

8 Each Contract shall be subject to the Company being satisfied as to the Customer's credit references (which unless otherwise stated shall be one bank reference and two trade references).

PAYMENT

9 (a) Unless the Contract otherwise provides, the Contract price for the goods and/or services shall be payable in cash not later than the last day of the month following the month of delivery or supply of the goods and/or services;
(b) Where goods and/or services are delivered or performed by installments, the Customer shall be obliged to pay for each installment upon the terms sets out in sub-paragraph (a) of this Condition;
(c) The time stipulated for payment shall be of the essence of the Contract and failure to pay within the period specified shall entitle the Company upon the expiration of seven days notice in writing to the Customer to suspend further performance of the Contract pending payment and in addition the Company shall be entitled without liability wholly or partially to cancel the Contract or any other contract between the Company and the Customer without prejudice to any other remedy available to the Company;

(d) Unless otherwise agreed in writing the Customer shall not be entitled to set off against any monies due to the Company under the Contract, any amount claimed by or due to the Customer from the Company whether pursuant to the Contract or on any other account whatsoever;

(e) The Company shall be entitled to interest as well after as before judgment on any part of the Contract price not paid by its due date from that date until actual payment at the rate of three (3) per cent per annum above the Base Lending Rate of Lloyds Bank Plc prevailing from time to time during such period.

(f) Where the Company specifies that payment will be made by letter of Credit, the Customer must establish and maintain in favour of the Company an irrevocable and unconditional Letter of Credit with or confirmed by a bank in England satisfactory to the Company. All bank charges (whether of the overseas or United Kingdom bank) in connection with the Letter of Credit and the opening thereof shall be borne by the Customer. If for any reason the bank is liable to make payment to the Company under any Letter of Credit established for that purpose fails to do so, the Customer shall nevertheless remain liable to pay for the goods supplied and/or services performed.

DRAWINGS AND SPECIFICATIONS

10(a) Unless it is expressly stated in the Contract that any figures or statements therein or in the Company's catalogues, sales literature or in any relevant drawings or other documents supplied by the Company as to the performance of the goods are guaranteed to be accurate, such figures and statements shall be approximate and subject to a margin of five (5) per cent. The Company gives no guarantee or representation that the goods will in all cases be identical with the illustrations weights and dimensions specified in such catalogues and literature drawings or other documents due to improvements and modifications to the goods or their specifications that may be made from time to time. The Company will notify the Customer in writing of any material alterations to any specifications relating to the goods and the Customer shall be deemed to have accepted such alterations unless notice in writing to the contrary is received by the Company within ten (10) days of the Company's notice to the Customer.

(b) If in the Contract the Company expressly guarantees the accuracy of such performance, figures or statements (whether subject to specific margins or otherwise) then in the event of the goods after delivery installation or commissioning failing to achieve and comply with the same, the Company shall thereafter be entitled to a reasonable period and to reasonable facilities to enable it to bring the goods up to the guaranteed standard of performance and the contractual time for delivery of the goods or the installation or commissioning thereof shall be extended for such reasonable period.

TESTS

11 If the Contract provides for testing and inspection of the goods or services, such testing and inspection shall be conclusive. If requested in writing arrangements will be made for the Customer's representative to be present at such tests and inspection. The Customer will be deemed to have accepted the goods and services as satisfactory after the completion of such testing and inspection unless written notice to the contrary specifying the matters complained of is received by the Company within ten (10) days of completion of such testing and, or inspection.

WARRANTY

12(a) Where any goods or services (or any part thereof) are shown to the reasonable satisfaction of the Company, to be defective by reason of faulty material or workmanship or (in the case of goods other than Special Goods) design, within a period of twelve (12) months from the date of their original despatch or supply, (fair wear and tear excepted) the Company shall at its sole option:-

(1) deliver replacement goods and, or supply further services to the Customer free of charge; and/or

(2) refund to the Customer the Contract price of such goods and/or services; and/or

(3) require the Customer to retain the goods and/or services and grant to the Customer a reasonable allowance in respect of such defects

PROVIDED that :-

(i) the Customer notifies the Company in writing within fourteen days of becoming aware of any such defect; and

(ii) if so required by the Company all defective goods are first returned to the Company's premises carriage paid by the Customer;

(iii) the goods have been properly and correctly stored and/or used by the Customer;

(iv) and the liability of the Company under this paragraph (a) shall be accepted by the Customer in substitution for and to the exclusion of any other claims for direct loss which the Customer has or may not have;

(b) The liability of the Company for any claim or claims other than those falling within paragraph (a) above for direct injury, loss or damage made by the Customer against the Company whether in contract or in tort (including negligence on the part of the Company, it's servants or agents) arising out of or in connection with any defect in the goods and/or services or any act, omission, neglect or default (whether or not the same constitutes a fundamental breach of the Contract or the breach of a fundamental term thereof, of the Company its servants or agents in the performance of the Contract (including, without limiting the generality of the foregoing, breach of any condition or warranty whether express or implied by statute, common law or otherwise howsoever) shall be limited to the contract price of such goods and/or services;

(c) The Company shall not be liable for any claims for economic loss, loss of production, loss of profit, loss of opportunity, loss of bargain or other indirect or consequential injury loss or damage made by the Customer against the Company whether in contract or in tort (including negligence on the part of the Company its servants or agents) arising out of or in connection with any such defect, act, omission, neglect or default referred to in sub-clause (b) of this Clause:

(d) Nothing in these Conditions shall :-

(1) limit or exclude the liability of the Company in respect of death or personal injury resulting from the negligence of the Company, its employees or agents; or

(2) limit or exclude the respective rights and remedies of the Company and the Customer under the Unfair Contract Terms Act 1977; or

(3) exclude the conditions and warranties implied by Section 12 of the Sale of Goods Act1979 and, where the Customer deals as a consumer, the conditions implied by Sections 13 to15 inclusive of the said Act and by sections 3 and 4of the Supply of Goods and Services Act 1982.

SPECIAL GOODS

13(a) The Company reserves the right to supply ten (10) per cent more or less than the exact quantity of Special Goods ordered such overs and shortages to be charged for or deducted pro rata; the

(b) (i) Company shall be entitled to reject any materials supplied or specified by the Customer which the Company in its judgement considers unsuitable. Additional costs incurred by the Company if such materials are judged to be unsuitable, will be charged to the Customer;

(ii) Quantities of materials supplied by the Customer shall be adequate to cover normal spoilage.

(c) The Company accepts no responsibility for the accuracy or suitability of patterns, designs, tools, drawings, particulars or specifications relating to Special Goods which are supplied by the Customer and the Company shall be entitled to accept the same as being without defect. The Company shall have no responsibility for the quality or fitness of Special Goods for any particular purpose whether or not such purpose is made known to the Company and the conditions implied by Sections 13 to 15 inclusive of the Sale of Goods Act 1979 and by Sections 3 to 5 inclusive, 7 to 10 inclusive and 13 to 15 inclusive of the Supply of Goods and Services Act 1982 shall be excluded. The Customer under takes to indemnify the Company and to keep the Company fully and effectually indemnified against all actions, proceedings, claims, costs, loss, damage or expense whatsoever arising in contract or tort which the Company may suffer or incur as a result of any defect in the Special Goods whether due to quality, design, fitness for purpose or in any other way whatsoever unless the same is due directly to the negligence of the Company, its employees or agents ;

(d) The Customer represents and warrants to the Company that neither the Special Goods nor the manufacture thereof by the Company will infringe any patent, copyright, registered design or any other proprietary right of any third party and the Customer further undertakes to indemnify the Company and keep the Company fully and effectually indemnified against all actions, or proceedings, claims costs, loss, damage or expense whatsoever in respect of any infringement by the Company of any patent, or copyright, design, trademark or any other proprietary right which the Company may suffer of incur in connection with the execution and performance of the Contract and such indemnity shall extend to any amount including costs paid by the Company (upon legal advice) in settlement of any claim out of Court.

CUSTOMER PROPERTY

14 All property supplied to the Company by or on behalf of the Customer which is held by the Company for the purposes of the Contract or in transit to or from the Customer, shall be deemed to be entirely at the Customer's risk and the Company shall not be liable for any loss of or damage to such property whilst in possession of the Company or in transit as aforesaid unless such loss or damage is due directly to the negligence of the Company, its employees or agents. In no circumstances whatsoever will the Company be liable for any consequential loss or damage arising therefrom. The Customer shall insure all such property for all risks.

LIEN

15 Without prejudice to any other rights and remedies which the Company may have under Contract, the Company shall in respect of all debts of the Customer to the Company have a general lien on all goods and property belonging to the Customer in its possession (whether worked on or not) and shall be entitled upon the expiration of fourteen days notice to the Customer, to dispose of such goods or property as it thinks fit and to apply any proceeds of sale thereof towards the payment of such debts.

HEALTH & SAFETY

16(a) The attention of the Customer is drawn to the provisions of Section 6 of the Health and Safety at Work etc. Act 1974, et al. The Company will make available such information as is appropriate relating to the goods and materials supplied as is in its possession to ensure that as far as is reasonably practicable they are safe and without risk to health when properly used ;

(b) The Customer hereby undertakes pursuant to Section 6 (8) of the Health and Safety at Work etc. Act 1974, et al, to take such measures as are communicated in writing to the Customer by the Company and to take such other steps as are sufficient to ensure, so far as is reasonably practicable, that the goods will at all times be safe and without risk to health when properly used. The goods and materials shall not be regarded as properly used when they are used without regard to any relevant information or advise relating to their use which has been communicated to the Customer pursuant to this clause;

(c) The company shall not be liable to the Customer in any civil proceedings brought by the Customer against the Company under any Health and Safety Regulations made pursuant to the Health and Safety at Work etc. Act 1974 , et al, where such exclusion of liability is permitted by law;

(d) The Customer shall indemnify and keep indemnified the Company in respect of any liability, monetary penalty or fine in respect of or in connection with the goods or services incurred directly or indirectly by the Company under the Health and Safety at work etc. Act 1974, et al, or any regulations orders or directions made thereunder.

INSOLVENCY AND BREACH OF CONTRACT

17 If any of the following events occur, are threatened or in the opinion of the Company are reasonably likely to occur :-

(a) The Customer shall commit any breach of the Contract and shall fail to remedy such breach (if capable of remedy) within a period of thirty days from receipt of notice in writing from the Company, requesting such breach to be remedied; or

(b) Any distress or execution is levied upon any of the goods or property of the Customer; or

(c) The Customer (or where the Customer is a partnership any partner thereof) offers to make any arrangements with or for the benefit of its or his creditors or commits any act of bankruptcy; or

(d) The Customer (being a Limited Company) has a receiver appointed of the whole or any part of its undertaking property or assets or an order is made or a resolution is passed or analogous proceedings are taken for the winding up of the Customer (save for the purpose of reconstruction or amalgamation without insolvency and previously approved in writing by the Company) the Company shall remain thereupon be entitled without prejudice to its other rights hereunder, forthwith to suspend further performance of the Contract and any other contract between the Company and the Customer until the default has been made good to determine the Contract or any other contract between the Company and the Customer or any unfulfilled part thereof or at the Company's option to make partial supplies of goods and/or services. Notwithstanding any such termination, the Customer shall pay to the Company at the Contract rate for all work done materials used and goods delivered up to and including the date of termination and shall in addition indemnify the Company against any resulting loss, damage or expense incurred by the Company in connection with the supply or non-performance of the contract including the cost of any material, plant or tools used or intended to be used therefore and the cost of labour and other overheads including a percentage in respect of profit.

SEVERANCE

18 If at any time any one or more of these conditions (or any paragraph, sub-paragraph or any part thereof) is held to be or becomes void or otherwise unenforcable for any reason under any applicable law, the same shall be deemed omitted herefrom and the validity and/or enforceability of the remaining provisions of these Conditions shall not in any way be affected or impaired thereby.

WAIVER

19 The rights and remedies of the Company under the Contract shall not be diminished waived or extinguished by the granting of any indulgence, forbearance or extension of time by the Company nor by any failure of or delay by the Company in asserting or exercising any such rights or remedies.

LAW

20 These conditions and each and every Contract made pursuant thereto shall be governed by and construed in all respects in accordance with the Laws of England and the Company and the Customer irrevocably submit to the exclusive jurisdiction of the English Courts.

FOR THE ATTENTION OF ACCOUNTS DEPARTMENT

Our terms are nett monthly a/c payment due by the end of the month following date of invoice. Please comply as this enables us in turn to pay for raw materials and similar and give continuity of supply.

You are requested to send remittances or queries concerning accounts to our Head Office, Walsall.

The title to the goods shall not pass until payment has been made.

IMPORTANT - The carriers will not recognise any claim for non-delivery of goods lost in transit if they are not notified by the senders within fourteen days from the date of despatch. We cannot accept liability unless we are advised in time to allow us to comply with the above conditions. No responsibility can be accepted by us for either shortages or damage unless you advised carriers same day as goods received with copy advice to us. NO PACKAGES can be credited unless returned in good condition, carriage paid, within 4 weeks of Date of Invoice, with advice to us. A 10% handling returns charge will be imposed on items correctly supplied against order but returned to us. E. & O. E.

Customer Returns Policy

Our aim is to provide you with the best possible service and this also applies to our returns policy. Please **DO NOT return any items to ALBERT JAGGER LIMITED**, without first contacting us by either telephone, email or fax, and requesting a **Customer Return Note Number** [CRN]. For goods being returned please contact:

WALSALL	t: 01922 471000	f: 01922 471077	e: sales@albert-jagger.co.uk
HEYWOOD	t: 01706 692110	f: 01706 625936	e: heywood@albert-jagger.co.uk
ROMSEY	t: 01794 525870	f: 01794 515586	e: romsey@albert-jagger.co.uk

If you wish to return goods for any reason, please supply the following information:

- Your full contact details
- Details of the products[s] that you wish to return
- The reason for return
- Date of Purchase
- Our order/invoice number

No goods will be accepted unless authorised by us and the package is marked clearly with the issued CRN number.

We will do everything possible to comply with reasonable requests for returns and will issue any refund due to you as promptly as possible. If you are dissatisfied with the goods for any reason, you have the right to return them to us within 7 days of receipt. As long as they are returned suitably packaged in new, unused condition, and the parts were not manufactured to your specification, and you pay for the return carriage and insurance, we will replace or refund them as appropriate.

Please note that all returns must be received by us within 7 days of the issue of a Customer Return Note [CRN] number.

If incorrect or faulty goods are supplied, we will of course replace or refund these as appropriate, as quickly as possible, but we must receive notification of any problems within 7 days of delivery of your order.

If goods are damaged in transit, please keep all documentation and packaging, and contact us within 48 hours of receipt for our Returns instructions.

If you have ordered goods incorrectly, please contact us via email or fax within 7 days of receipt of goods. Returns of correctly supplied goods must be unused, undamaged, in the original packaging and carriage paid by the customer, and **may be subject to a re-stocking charge [at our discretion] to cover our expenses.**

If you are uncertain as to whether or not you are ordering the correct item, please contact us for advice or order a single item to ensure that it is correct before ordering large quantities.

If you have any concerns or questions, please email or fax us as detailed above.

HEAD OFFICE:- **Centaur Works, Green Lane, Walsall, West Midlands. WS2 8HG**
tel: 01922 471000 fax: 01922 471077 e-mail: sales@albert-jagger.co.uk

BRANCH:- **Foxhill Works, Fox Street, Heywood, Lancashire. OL10 1EA**
tel: 01706 692110 fax: 01706 625936 e-mail: heywood@albert-jagger.co.uk

BRANCH:- **Frobisher Industrial Centre, Budds Lane, Romsey, Hampshire. SO51 0EZ**
tel: 01794 525870 fax: 01794 515586 e-mail: romsey@albert-jagger.co.uk

ironwork
cargo control

section a

JAGALOK DROPSIDE SYSTEM *a1-a3*
PILLARS & SOCKETS *a2-a4*
SIDEGUARD SYSTEM *a5*
GUDGEONS *a6-a7*
HINGES *a7-a9*
ANTILUCE FASTENERS *a10-a11*
EYE PLATES *a12*
RETAINING PINS *a13-a17*
SIDE & TAILBOARD FITTINGS *a18-a24*
ROPE HOOKS *a25-a26*
RAMP FASTENERS *a27*
RAMP SPRINGS *a28-a31*
TRAILER FITTINGS *a32-a33*
SKIP FITTINGS *a34*
SPRING BOLTS *a35-a39*
METAL PROFILES *a40*
CHAINS & ACCESSORIES *a41-a43*
BODY MOUNTING BRACKETS *a44-a57*
U BOLTS *a57-a58*

CURTAIN TENSIONERS *a59*
STRAP ASSEMBLIES *a60-a62*
TRANSPORTER WINCHES *a63*
INTERNAL TRACKING *a64-a65*
SHORING POLES *a66*
POLE CUPS *a67*
LASHING RINGS *a68-a71*
TWIST LOCKS *a72*
CORNER CASTINGS *a73*

IRONWORK
CARGO CONTROL

JAGALOK

■ DROPSIDE SYSTEM ■ DROPSIDE SYSTEM ■

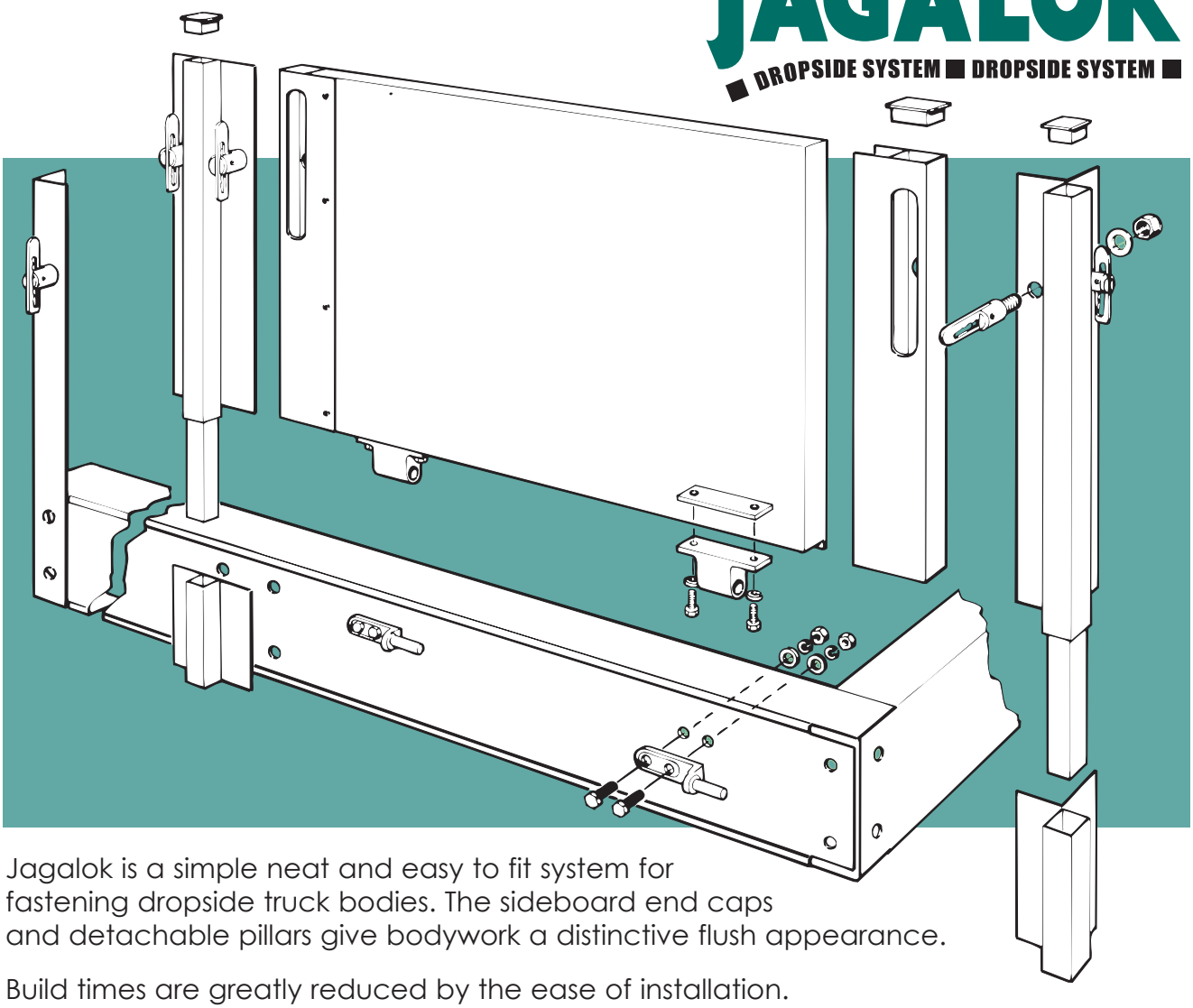

Jagalok is a simple neat and easy to fit system for fastening dropside truck bodies. The sideboard end caps and detachable pillars give bodywork a distinctive flush appearance.

Build times are greatly reduced by the ease of installation.

Pillars and end caps are made from aluminium extrusion, with all steel parts zinc-plated.

END CAPS

The side and tailboard caps are designed for 1" (25mm) aluminium, hollow plank-section, which should be cut 3.75" (95mm) short of overall length required in order to accommodate an end cap at each end. The end caps are fitted over the plank, then drilled and rivetted through their flanges.

The method of sideboard attachment requires the side to fit 1" (25mm) below the floor level. Thus, for a 15" (381mm) and 18" (457mm) interior height, the end caps will measure 16" (406mm) and 19" (483mm).

HINGE SETS

The hinges supplied are for hollow plank fixing and the gudgeons are the bolt-through type. Kits include 4 hinge sets per sideboard and 3 per tailboard. Hinge fixing packs include everything to install one hinge set.

CORNER AND CENTRE PILLARS

The side-rave ribbing should be cut out to enable the corner socket to fit flush to full side rave depth. The centre socket fits within the ribbing. Pillar sockets should be drilled and fixed to suit bodybuilders method of construction.

FRONT PILLAR

A front pillar is not supplied and should be made up to suit the specification of the loading board/gantry, etc.

ANTILUCE FASTENERS

The Antiluce assemblies are supplied with nut and washer. The fixing hole should be marked on the pillars with the sideboard fitted and in the closed position. Holes should then be drilled 0.5".

KIT VARIATION

Pillars and end caps can be shortened in order to lower the sideboard height to particular operator requirements. Pillars should be cut off at the top end before the Antiluce fastener is fitted and after firstly removing the plastic end plug. End caps can be shortened by a corresponding amount which should be cut off at the lower end.

Walsall: 01922 471000 Heywood: 01706 692110 Romsey: 01794 525870

www.albert-jagger.co.uk

albert Jagger limited

JAGALOK

■ DROPSIDE SYSTEM ■ DROPSIDE SYSTEM ■

Jagalok is available as a kit and is supplied with sufficient parts to complete single or double dropside bodies to various sideboard heights. Ample fastenings are provided and an illustrated check list is shown below.

DROPSIDE INTERIOR HEIGHT	KIT DESCRIPTION	KIT PART NUMBER	CORNER PILLARS	CORNER SOCKET	CENTRE PILLARS	CENTRE SOCKET	END LEFT HAND	CAPS RIGHT HAND	ANTILUCE ASSEMBLY	HINGE HOUSING	GUDGEON	HINGE FIXING PACKS
			2	2	NONE	NONE	3	3	6	11	11	12
15"	SINGLE DROPSIDE	9933/1115	9934/1315	9934/1642	/	/	9934/1716	9934/1816	9934/0921	9934/0902	9934/0901	9934/0910
			2	2	NONE	NONE	3	3	6	11	11	12
18"	SINGLE DROPSIDE	9933/1118	9934/1318	9934/1652	/	/	9934/1719	9934/1819	9934/0921	9934/0902	9934/0901	9934/0910
			2	2	2	2	5	5	10	19	19	20
15"	DOUBLE DROPSIDE	9933/1215	9934/1315	9934/1642	9934/1115	9934/1233	9934/1716	9934/1816	9934/0921	9934/0902	9934/0901	9934/0910
			2	2	2	2	5	5	10	19	19	20
18"	DOUBLE DROPSIDE	9933/1218	9934/1318	9934/1652	9934/1118	9934/1233	9934/1719	9934/1819	9934/0921	9934/0902	9934/0901	9934/0910
			2	2	2	2	5	5	10	19	19	20
24"	DOUBLE DROPSIDE	9933/1224	9934/1324	9934/1652	9934/1124	9934/1233	9934/1725	9934/1825	9934/0921	9934/0902	9934/0901	9934/0910
			9934/0912 - PILLAR PLUG		9934/0913 - PILLAR PLUG		9934/0911 - PILLAR PLUG 9934/0925 - SLOT PROTECTOR		REPLACEMENT PARTS AVAILABLE FOR ALL ITEMS			

CENTRE PILLAR

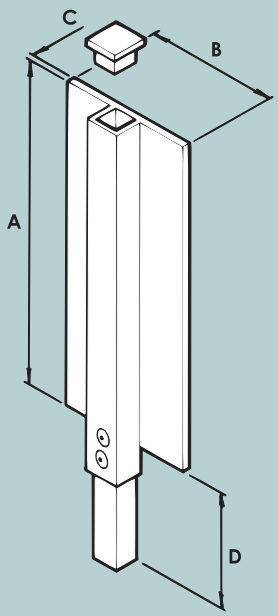

15" - **9934/1115**

18" - **9934/1118**

24" - **9934/1124**

A = 381mm (15")
457mm (18")
610mm (24")
B = 133mm (5.25")
C = 4mm (0.16")
D = 104mm (4.10")

CORNER PILLAR

9934/1315 - 15"

9934/1318 - 18"

9934/1324 - 24"

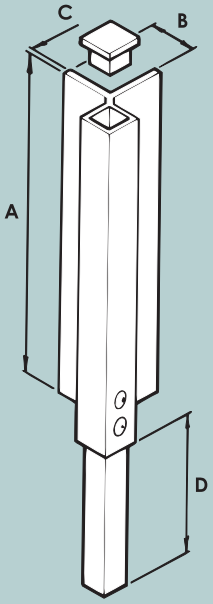

A = 381mm (15")
457mm (18")
610mm (24")
B = 47mm (1.85")
C = 4mm (0.16")
D = 102mm (4") - 15"
127mm (5") - 18" & 24"

Jagalok Spares

www.albert-jagger.co.uk Walsall: 01922 471000 Heywood: 01706 692110 Romsey: 01794 525870

Jagalok Spares

END CAPS (LEFT HAND)

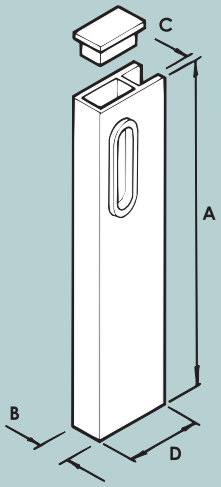

16" - **9934/1716**

19" - **9934/1719**

25" - **9934/1725**

A = 406mm (16")
483mm (19")
635mm (25")
B = 30mm (1.18")
C = 2mm (0.08")
D = 75mm (2.95")

END CAPS (RIGHT HAND)

9934/1816 - 16"

9934/1819 - 19"

9934/1825 - 25"

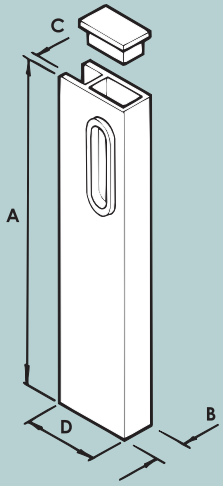

A = 406mm (16")
483mm (19")
635mm (25")
B = 30mm (1.18")
C = 2mm (0.08")
D = 75mm (2.95")

CENTRE SOCKET

3.375"- **9934/1233**

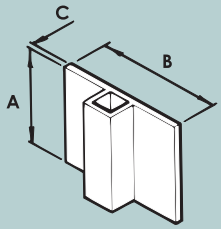

A = 86mm (3.375")
B = 133mm (5.25")
C = 4mm (0.16")

CORNER SOCKET

9934/1642 - 4.25"

9934/1652 - 5.25"

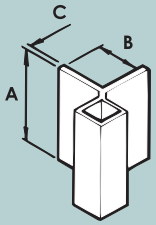

A = 108mm (4.25")
133mm (5.25")
B = 47mm (1.85")
C = 4mm (0.16")

9934/0900 - HINGE HOUSING ASSEMBLY (see page a7)

HINGE HOUSING

9934/0902

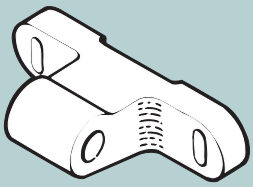

For full dimensional details see page a7.

GUDGEON

9934/0901

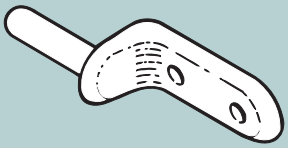

For full dimensional details see page a7.

ANTILUCE ASSEMBLY

9934/0921

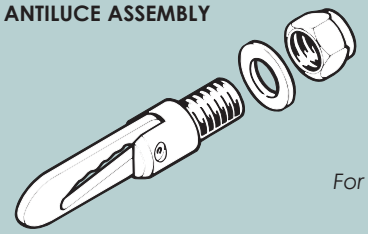

For full dimensional details see page a11.

HINGE FIXING PACKS

9934/0903 - *PLATE ONLY*

A = 102mm (4.02")
B = 16mm (0.63")
C = 76mm (3")
D = 6mm (0.24")

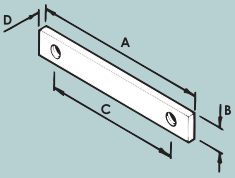

9934/0910 - *FIXING PACK*

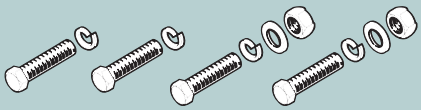

Pillars & Sockets

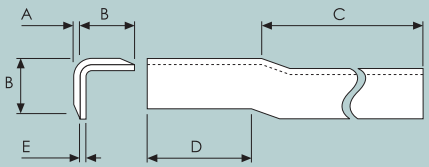

CORNER PILLARS

Self-colour, pressed, mild steel.
Medium duty.

	A	B	C	D	E	F	G	H
2628/003					**Weight 1.9kg/4.2lb**			
METRIC (mm)	*6*	*43*	*450*	*102*	*6*			
IMPERIAL (ins)	*0.24*	*1.69*	*17.7*	*4.02*	*0.24*			

Right - 2131/005 *Left - 2628/003*

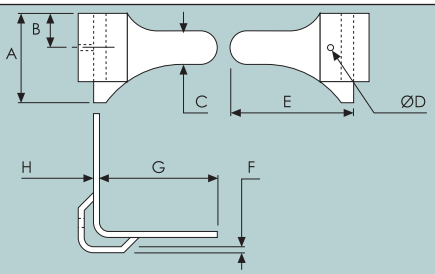

CORNER SOCKETS

Pressed, mild steel.
Self colour finish.

	A	B	C	D	E	F	G	H
2131/005	**Left hand (shown)**				**Weight 1.7kg/3.8lb**			
2131/006	**Right hand**							
METRIC (mm)	*128*	*53*	*51*	*M8*	*180*	*6*	*162*	*5*
IMPERIAL (ins)	*5.04*	*2.09*	*2.00*		*7.09*	*0.24*	*6.38*	*0.20*

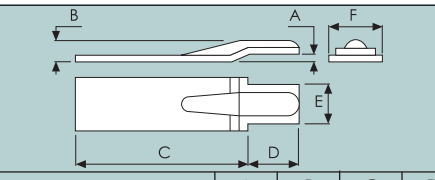

CENTRE PILLARS

Self-colour, forged steel. For socket see below.

	A	B	C	D	E	F	G	H
2448/001					**Weight 3.6kg/8lb**			
METRIC (mm)	*12.5*	*34*	*471*	*89*	*68*	*90*		
IMPERIAL (ins)	*0.49*	*1.33*	*18.5*	*3.50*	*2.67*	*3.54*		
2448/003					**Weight 4.7kg/10.4lb**			
METRIC (mm)	*12.5*	*34*	*623*	*89*	*68*	*90*		
IMPERIAL (ins)	*0.49*	*1.33*	*24.5*	*3.50*	*2.67*	*3.54*		
2448/004					**Weight 5.8kg/12.8lb**			
METRIC (mm)	*12.5*	*34*	*776*	*89*	*68*	*90*		
IMPERIAL (ins)	*0.49*	*1.33*	*30.6*	*3.50*	*2.67*	*3.54*		

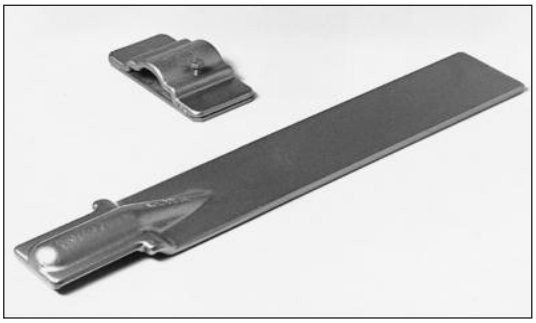

Top: 2448/002 *Bottom: 2448/001*

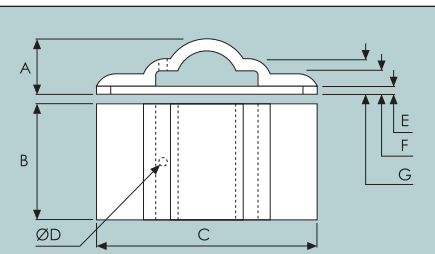

CENTRE SOCKET

Self-colour, forged steel.
Supplied complete with M8 fixing bolt.
for use with 2448/001, 003 & 004 pillars (see above)

	A	B	C	D	E	F	G	H
2448/002					**Weight 1.3kg/2.9lb**			
METRIC (mm)	*38.1*	*76.2*	*152.4*	*M8*	*5.00*	*13.5*	*25.0*	
IMPERIAL (ins)	*1.50*	*3.00*	*6.00*		*0.20*	*0.53*	*0.98*	

SIDEGUARD SYSTEM

- ***HINGED GUARD*** *ARMS ALLOWS EASY ACCESS UNDER VEHICLE*
- ***POSITIVE LOCKING*** *VIA PIN OR HIDDEN SPRING CLIP RETAINER*
- ***BOLT-ON*** *SYSTEM - NO WELDING RQUIRED*
- *EXCELLENT* ***CORROSION RESISTANCE***
  ANODISED ALUMINIUM & GALVANISED STEEL CONSTRUCTION
- *ALL KITS SUITABLE FOR* ***BOTH SIDES*** *OF ONE VEHICLE*
- *FULLY COMPLIES WITH* ***EEC DIRECTIVES*** *& HAS* ***'TUV'*** *CERTIFICATION*

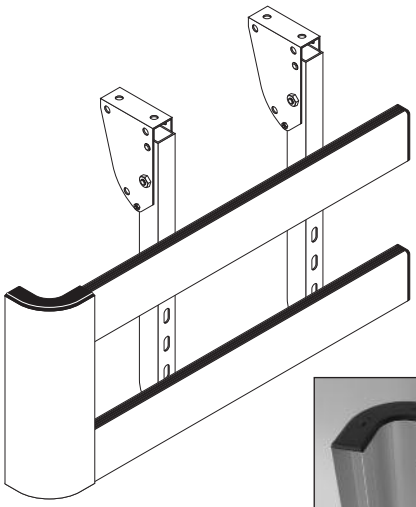

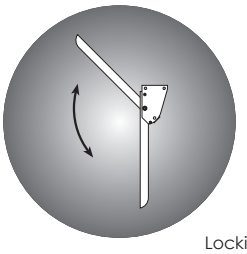

6801/003
side guard leg
Locking via pin & tag
Galvanised steel

6801/005
side guard leg
Locking via spring clip retainer
Galvanised steel
(shown)

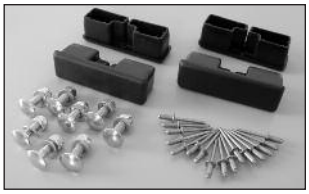

6802/200
double pedestrian guard kits
Kit consists of:
2 anodised aluminium, double pedestrian guards,
4 black plastic end caps to suit guards,
4 black plastic end caps to suit guard rail,
16 aluminium blind rivets,
8 lock-nuts, 8 plain washers, 8 carriage bolts
(all galvanised steel).

6802/100
single pedestrian guard kits
Kit consists of:
2 anodised aluminium, single pedestrian guards,
4 black plastic end caps to suit guards,
2 black plastic end caps to suit guard rail,
8 aluminium blind rivets,
4 lock-nuts, 4 plain washers, 4 carriage bolts
(all galvanise steel).

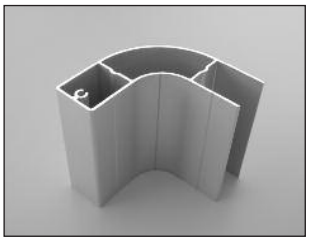

6803/3400
guard rail
Consists of 3400mm anodised aluminium extrusion.
Other sizes available, details on request.

Gudgeons

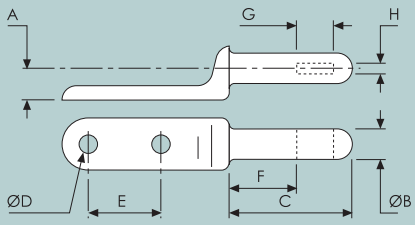

BOLT-ON GUDGEONS

* Peg is slotted to take flat cotter.

	A	B	C	D	E	F	G	H
1016/001 1016/002	**Self-colour steel Zinc-plated**				**Weight 190g/6.7oz**			
METRIC (mm)	*18*	*12.5*	*48*	*8.5*	*38*			
IMPERIAL (ins)	*0.71*	*0.50*	*1.89*	*0.34*	*1.5*			
1016/003	**Self-colour steel**				**Weight 280g/10oz**			
METRIC (mm)	*22.5*	*16*	*63.5*	*10*	*51*			
IMPERIAL (ins)	*0.89*	*0.63*	*2.50*	*0.39*	*2.00*			
1042/001 1042/002	**Self-colour steel Zinc-plated**				**Weight 130g/4.6oz**			
METRIC (mm)	*16.5*	*12.5*	*42*	*7*	*30*			
IMPERIAL (ins)	*0.65*	*0.50*	*1.65*	*0.28*	*1.18*			
2605/001 2605/011	***Self-colour steel *Zinc-plated**				**Weight 220g/7.8oz**			
METRIC (mm)	*18*	*12.5*	*65*	*8.5*	*38*	*42*	*16*	*5*
IMPERIAL (ins)	*0.71*	*0.50*	*2.56*	*0.34*	*1.50*	*1.65*	*0.63*	*0.20*

Left to right:
2605/001, 2604/001, 1016/001, 1042/002

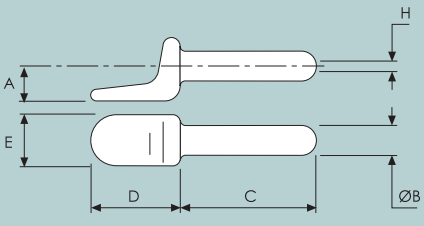

WELD-ON GUDGEONS

Self colour steel.

	A	B	C	D	E	F	G	H
1036/001					**Weight 110g/3.9oz**			
METRIC (mm)	*16*	*12.5*	*40*	*45*	*26*			
IMPERIAL (ins)	*0.63*	*0.50*	*1.58*	*3.27*	*1.02*			
1037/002					**Weight 160g/5.7oz**			
METRIC (mm)	*17.5*	*12.5*	*63*	*47*	*30*			
IMPERIAL (ins)	*0.69*	*0.50*	*2.48*	*1.85*	*1.18*			
1037/003					**Weight 200g/7.1oz**			
METRIC (mm)	*20*	*16*	*60*	*48*	*30*			
IMPERIAL (ins)	*0.79*	*0.63*	*2.36*	*1.89*	*1.18*			
1037/010					**Weight 140g/4.9oz**			
METRIC (mm)	*17.5*	*12.5*	*50*	*50*	*27*			
IMPERIAL (ins)	*0.70*	*0.50*	*1.97*	*1.97*	*1.06*			

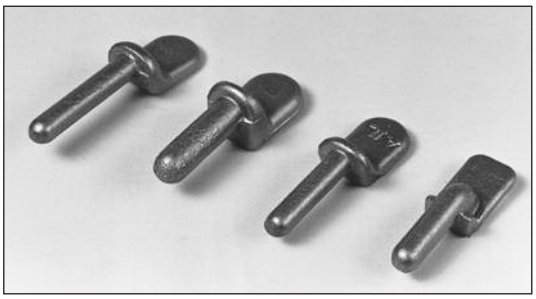

Left to right:
1037/002, 1037/003, 1037/010, 1036/001

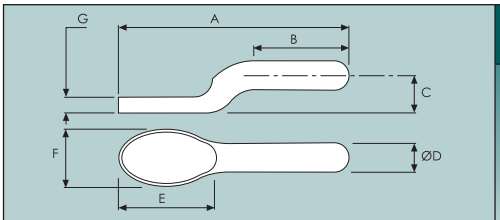

GUDGEON

Pressed, self-colour steel to weld-on.

	A	B	C	D	E	F	G	H
1037/006					**Weight 100g/3.5oz**			
METRIC (mm)	*103*	*46*	*17*	*12.5*	*42*	*25*	*7*	
IMPERIAL (ins)	*4.06*	*1.81*	*0.67*	*0.49*	*1.65*	*0.98*	*0.28*	

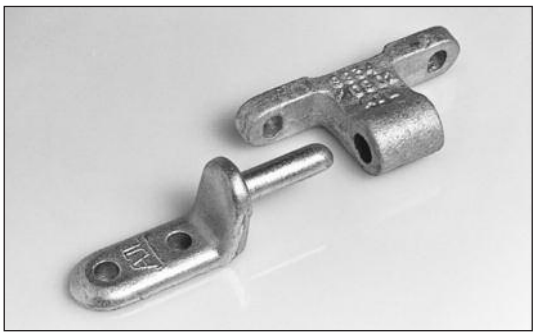

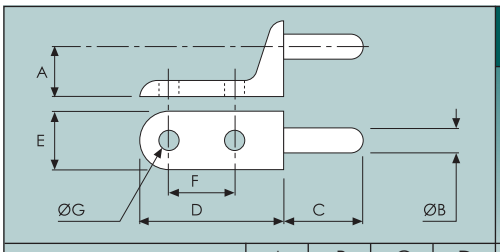

JAGALOK GUDGEON

Zinc-plated steel. For use with Jagalok hinge housing 9934/0902 (see also pages 1 -3). Suitable for various other applications.

	A	B	C	D	E	F	G	H
9934/0901					**Weight 180g/6.4oz**			
METRIC (mm)	*22*	*11.6*	*40*	*67*	*22*	*30*	*8.7*	
IMPERIAL (ins)	*0.90*	*0.46*	*1.58*	*2.64*	*0.90*	*1.18*	*0.34*	

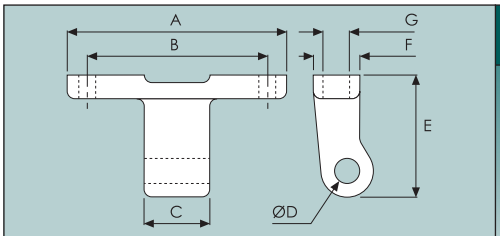

JAGALOK HINGE HOUSING

Zinc-plated steel. For use with Jagalok gudgeon 9934/0901 only (see also pages 1 -3).

	A	B	C	D	E	F	G	H
9934/0902					**Weight 280g/10oz**			
METRIC (mm)	*99*	*76*	*30*	*12.5*	*49.5*	*20*	*12*	
IMPERIAL (ins)	*3.90*	*3.00*	*1.18*	*0.50*	*1.95*	*0.79*	*0.47*	

HINGE ASSEMBLY

9934/0900 — **Zinc plated Hinge Assembly**

1 x 9934/0901 Gudgeon (see above)
1 x 9934/0902 Hinge pin (see above)
1 x 9934/0903 Back plate (ref page a3)
4 x Fixing bolts (ref page a3)
2 x Nuts (ref page a3)
2 x Spring washers (ref page a3)
4 x Flat washers (ref page a3)

Hinges

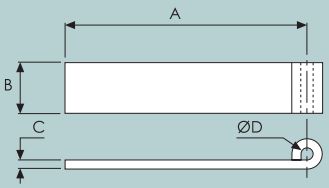

STRAIGHT HINGES

Self-colour, mild steel unless otherwise stated. Dimension 'D' represents gudgeon diameter to be used.

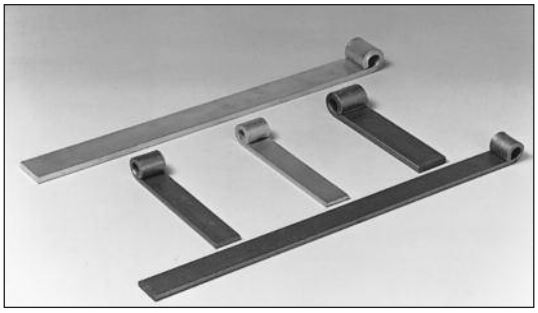

	A	B	C	D	E	F	G	H
0969/002					**Weight 290g/10oz**			
0969/012	**Zinc-plated**							
METRIC (mm)	*153*	*30*	*6.4*	*12.7*				
IMPERIAL (ins)	*6*	*1.18*	*0.25*	*0.50*				
1002/013					**Weight 510g/1.1lb**			
METRIC (mm)	*153*	*40*	*8*	*12.7*				
IMPERIAL (ins)	*6.00*	*1.58*	*0.32*	*0.50*				
1002/113					**Weight 690g/1.5lb**			
METRIC (mm)	*153*	*30*	*12.7*	*25.4*				
IMPERIAL (ins)	*6.00*	*1.18*	*0.50*	*1.00*				
1002/011					**Weight 730g/1.6lb**			
METRIC (mm)	*457*	*30*	*6.4*	*12.7*				
IMPERIAL (ins)	*18*	*1.18*	*0.25*	*0.50*				
1002/014					**Weight 1.3kg/2.8lb**			
METRIC (mm)	*457*	*40*	*8*	*12.7*				
IMPERIAL (ins)	*18*	*1.58*	*0.32*	*0.50*				
1002/111					**Weight 1.6kg/3.4lb**			
METRIC (mm)	*457*	*30*	*12.7*	*25.4*				
IMPERIAL (ins)	*18*	*1.18*	*0.50*	*1.00*				
1002/114					**Weight 1.3kg/2.9lb**			
METRIC (mm)	*457*	*40*	*8*	*16*				
IMPERIAL (ins)	*18*	*1.58*	*0.32*	*0.63*				
1002/015					**Weight 1.4kg/3.2lb**			
METRIC (mm)	*508*	*40*	*8*	*12.7*				
IMPERIAL (ins)	*20*	*1.58*	*0.32*	*0.50*				
1002/016					**Weight 1.6kg/3.6lb**			
METRIC (mm)	*610*	*40*	*8*	*12.7*				
IMPERIAL (ins)	*24*	*1.58*	*0.32*	*0.50*				
1002/017					**Weight 2kg/4.5lb**			
METRIC (mm)	*762*	*40*	*8*	*12.7*				
IMPERIAL (ins)	*30*	*1.58*	*0.32*	*0.50*				
1002/018					**Weight 2.4kg/5.2lb**			
METRIC (mm)	*914*	*40*	*8*	*12.7*				
IMPERIAL (ins)	*36*	*1.58*	*0.32*	*0.50*				

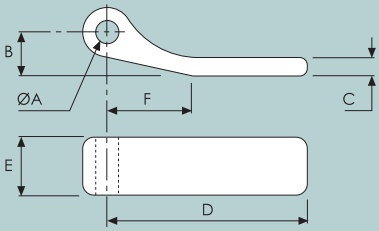

WELD-ON HINGE

Self-colour, forged steel.

	A	B	C	D	E	F	G	H
1072/001					**Weight 510g/1.1lb**			
METRIC (mm)	*16*	*22.2*	*11.1*	*114.3*	*35*	*32*		
IMPERIAL (ins)	*0.63*	*0.87*	*0.44*	*4.50*	*1.40*	*1.26*		

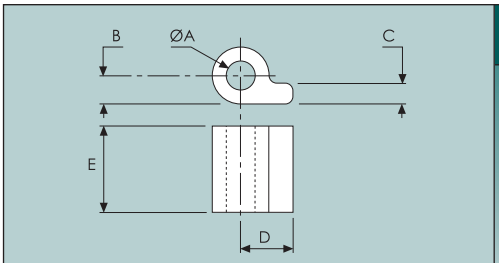

WELD-ON HINGE

Self-colour, forged steel.

	A	B	C	D	E	F	G	H
1034/001					**Weight 210g/7.4oz**			
METRIC (mm)	*12.7*	*14.0*	*10.0*	*29.0*	*38.0*			
IMPERIAL (ins)	*0.50*	*0.55*	*0.39*	*1.14*	*1.50*			

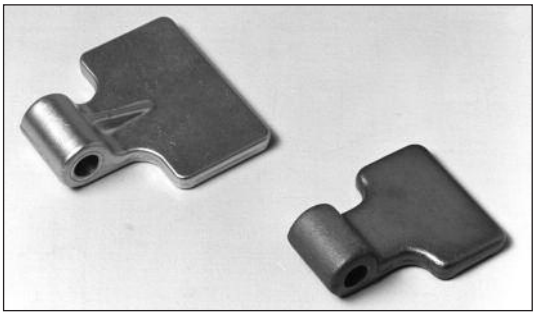

Left - 1054/001 *Right - 1032/001*

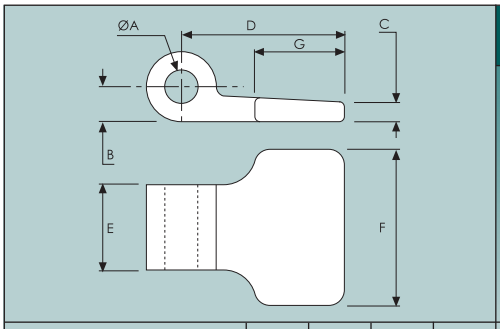

WELD-ON HINGES

	A	B	C	D	E	F	G	H
1032/001	**Forged steel**				**Weight 520g/1.2lb**			
METRIC (mm)	*12.7*	*14.0*	*10.0*	*83.0*	*40.0*	*76.2*	*44.5*	
IMPERIAL (ins)	*0.5*	*0.55*	*0.40*	*3.30*	*1.58*	*3.00*	*1.75*	
1032/002	**Forged steel**				**Weight 500g/1.1lb**			
METRIC (mm)	*16.0*	*14.0*	*9.50*	*83.0*	*38.0*	*76.2*	*44.5*	
IMPERIAL (ins)	*0.63*	*0.55*	*0.38*	*3.30*	*1.50*	*3.00*	*1.75*	
1054/001	**Forged aluminium**				**Weight 270g/9.5oz**			
METRIC (mm)	*12.7*	*14.0*	*10.0*	*91.0*	*42.0*	*102*	*57.0*	
IMPERIAL (ins)	*0.50*	*0.55*	*0.39*	*3.60*	*1.65*	*4.00*	*2.30*	

Complete with integral zinc-plated, steel bush.

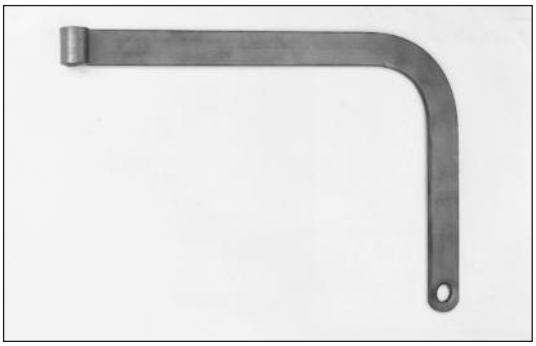

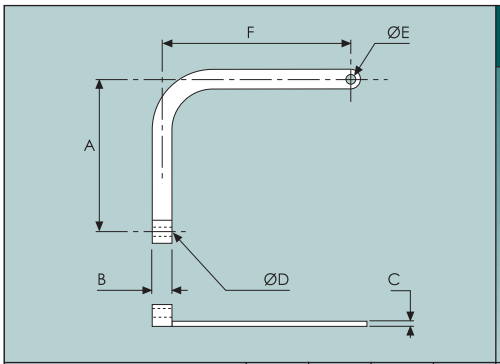

SWEPT HINGES

Self-colour, forged steel.
Dimension 'D' represents gudgeon pin Ø to be used.
Right hand shown

	A	B	C	D	E	F	G	H
1000/001	**Left hand**				**Weight 1.9kg/4.2lb**			
1000/002	**Right hand**							
METRIC (mm)	*457*	*40.0*	*8.00*	*12.7*	*22.0*	*290*		
IMPERIAL (ins)	*18.0*	*1.58*	*0.32*	*0.50*	*0.87*	*11.4*		
1000/003	**Left hand**				**Weight 2.1kg/4.6lb**			
1000/004	**Right hand**							
METRIC (mm)	*508*	*40.0*	*8.00*	*12.7*	*22.0*	*290*		
IMPERIAL (ins)	*20.0*	*1.58*	*0.32*	*0.50*	*0.87*	*11.4*		

Antiluce Fasteners

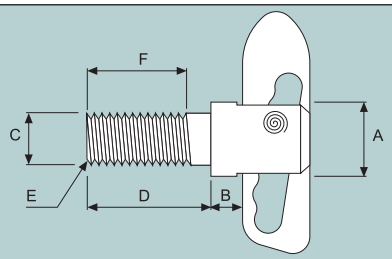

ANTILUCE FASTENERS

A versatile fastener which is available in a wide variety of sizes and finishes.
Spare nuts and washers are available on request.

	A	B	C	D	E	F	G	H
3232/001	**Zinc plated**				**Weight 90g/3.2oz**			
METRIC (mm)	19	6.4	12	12				
IMPERIAL (ins)	0.75	0.25	0.50	0.50				
3243/001	**Zinc plated**				**Weight 90g/3.2oz**			
METRIC (mm)	19	6.4	11sqr.	12	M8	12		
IMPERIAL (ins)	0.75	0.25	0.43	0.5		0.5		
Internal thread on shank								
3244/001	**Zinc plated**				**Weight 140g/5oz**			
METRIC (mm)	19	6.4	13	76	M12	64		
IMPERIAL (ins)	0.75	0.25	0.50	3.00		2.50		
Shank slotted for tab washer & nut.								
3245/001	**Zinc plated**				**Weight 90g/3.2oz**			
METRIC (mm)	19	4.8	12	24	M12	18		
IMPERIAL (ins)	0.75	0.19	0.50	0.94		0.71		
12mm (0.5") sqr. x 3mm (0.125") shoulder.								
3261/001	**Zinc plated**				**Weight 100g/3.5oz**			
METRIC (mm)	19	6.4	12	25				
IMPERIAL (ins)	0.75	0.25	0.50	1.00				
3263/001	**Zinc plated**				**Weight 90g/3.2oz**			
METRIC (mm)	19	6.4	12	25	M12	19		
IMPERIAL (ins)	0.75	0.25	0.50	1.00		0.75		
3265/001	**Zinc plated**				**Weight 120g/4.2oz**			
METRIC (mm)	19	22	12	9				
IMPERIAL (ins)	0.75	0.86	0.50	0.34				
3274/001	**Zinc plated**				**Weight 30g/1.1oz**			
METRIC (mm)	13	6.4	8	9.5				
IMPERIAL (ins)	0.50	0.25	0.31	0.38				
3275/001	**Zinc plated**				**Weight 100g/3.5oz**			
METRIC (mm)	19	6.4	12	33	M12	28		
IMPERIAL (ins)	0.75	0.25	0.50	1.30		1.10		
3281/001	**Zinc plated**				**Weight 120g/4.2oz**			
METRIC (mm)	19	9.5	12	44	M12	25		
IMPERIAL (ins)	0.75	0.37	0.50	1.73		1.00		
3285/001	**Zinc plated**				**Weight 40g/1.4oz**			
METRIC (mm)	13	6.4	8	21	M8	18		
IMPERIAL (ins)	0.51	0.25	0.31	0.81		0.71		
Complete with nut and two washers.								
3285/032	**Zinc plated**				**Weight 40g/1.4oz**			
METRIC (mm)	13	6.4	8	38	M8	38		
IMPERIAL (ins)	0.51	0.25	0.31	1.50		1.50		
Undercut thread, complete with nut and washer.								
3289/001	**Zinc plated**				**Weight 120g/4.2oz**			
METRIC (mm)	19	14	12	33	M12	27		
IMPERIAL (ins)	0.75	0.56	0.50	1.30		1.06		
3309/001	**Zinc plated**				**Weight 160g/5.7oz**			
METRIC (mm)	19	14	12	88	M12	51		
IMPERIAL (ins)	0.75	0.56	0.50	3.50		2.00		

ANTILUCE FASTENERS

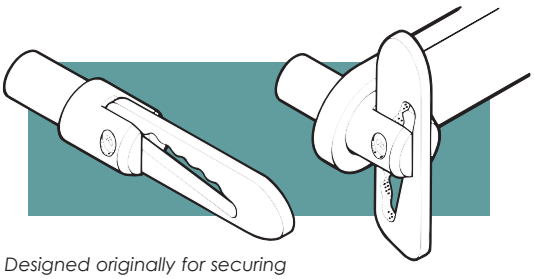

Designed originally for securing lorry side and tailboards, its use has been extended to pallets, transit crates, lockers and a wide range of machinery.
Essentially, a captive cotter which dispenses with loose cotters and chains. It is secure, robust and simplicity itself to use. It eliminates lost cotters, broken chains and damaged paintwork. It is a complete fastener in itself and its one piece construction saves time in fitting compared with the two parts of a peg and cotter fastening.

Row 1: left - 3244/001, right - 3285/001
Row 2: left - 3274/001, right - 3309/001
Row 3: left - 3261/001, centre - 9934/0921, right - 3265/001
Row 4: left - 3243/001, right - 3281/001
Row 5: left - 3289/001, centre - 3232/001, right - 3245/001

Antiluce Fasteners

NUTS & WASHERS

3254/002 - Ø19mm x 1.5mm thick washer with internal hole at Ø13mm.. Mild steel with a zinc plate finish.

3045/001 - 1/2" UNF Nyloc nut.

3045/002 - M12 Nyloc nut.

		A	B	C	D	E	F	G	H
3325/001	**Zinc plated**					**Weight 140g/5oz**			
	METRIC (mm)	19	6.4	13	76		65		
	IMPERIAL (ins)	0.75	0.25	0.50	3.00	1/2UNF	2.56		
	Complete with nut.								
3327/001	**Stainless steel**					**Weight 40g/1.4oz**			
	METRIC (mm)	13	6.4	8	38	M8	38		
	IMPERIAL (ins)	0.50	0.25	0.31	1.50		1.50		
	Undercut thread.								
3330/047	**304 Stainless steel**					**Weight 100g/3.5oz**			
	METRIC (mm)	19	6.5	12.5	12.5				
	IMPERIAL (ins)	0.75	0.26	0.49	0.49				
3330/061	**304 Stainless steel**					**Weight 106g/3.7oz**			
	METRIC (mm)	19	6.4	12	25	M12	22		
	IMPERIAL (ins)	0.75	0.25	0.50	0.98		0.87		
3330/095	**304 Stainless Steel**					**Weight 43g/1.5oz**			
	METRIC (mm)	12.7	5	8	25	M8	22		
	IMPERIAL (ins)	0.5	0.20	0.32	0.98		0.87		
9934/0921	**Geomet Finish**					**Weight 110g/3.9oz**			
	METRIC (mm)	19	7	12	19	M12	13		
	IMPERIAL (ins)	0.75	0.28	0.50	0.75		0.51		
	See also 'Jagalok' page a1, a2 and a3.								

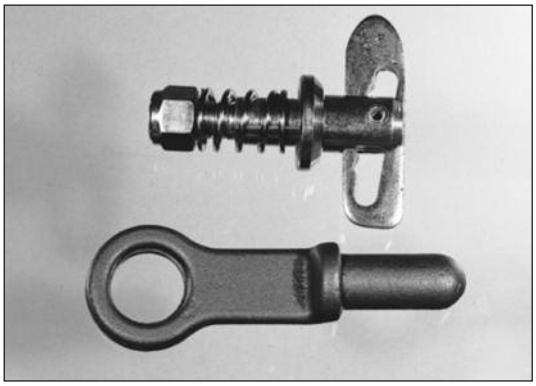

Spring-loaded Antiluce fasteners, when fitted in conjunction with long-necked eyes provide a rattle-free, quick release fastening system which is particularly suited to vehicles requiring tubular retention rails.

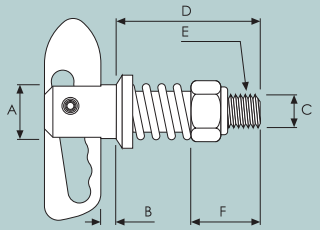

SPRING LOADED ANTILUCE

Zinc plated with a gold passivated finish. Complete assembly supplied as shown. Ø16mm (0.63") shank.

		A	B	C	D	E	F	G	H
3284/001						**Weight 190g/6.7oz**			
	METRIC (mm)	19	6.5	12	51		22		
	IMPERIAL (ins)	0.75	0.26	0.47	2.00	1/2UNF	0.87		

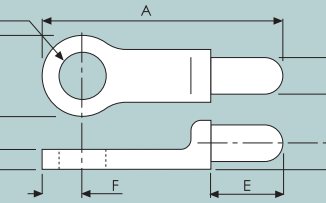

LONG-NECKED EYE

Self-colour, forged steel.

		A	B	C	D	E	F	G	H
7101/001						**Weight 210g/7.4oz**			
	METRIC (mm)	122	41	9	10	38	20.5	24	18
	IMPERIAL (ins)	4.80	1.61	0.35	0.40	1.50	0.81	0.95	0.71

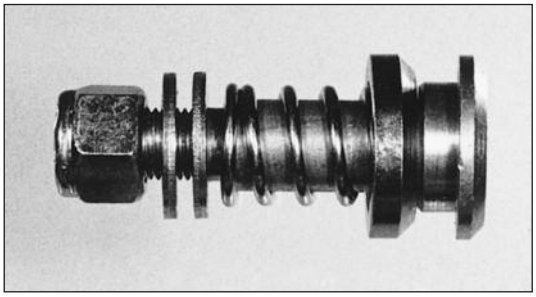

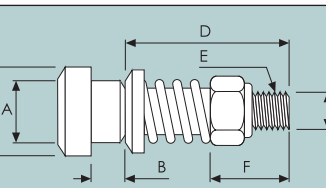

SPRING LOADED STANCHION PIN

Zinc plated with a gold passivated finish. Complete assembly. Ø16mm (0.63") shank.

		A	B	C	D	E	F	G	H
7100/002						**Weight 190g/6.7oz**			
	METRIC (mm)	22	7	12	60		28	32	
	IMPERIAL (ins)	0.87	0.28	0.47	2.36	1/2UNF	1.10	1.26	

Eye plates

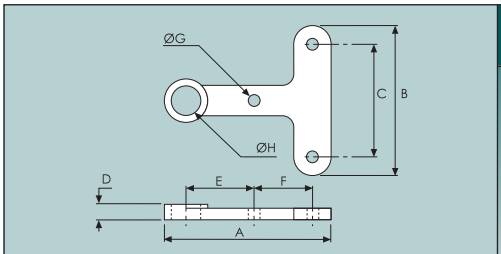

EYE PLATE

Self-colour steel.

	A	B	C	D	E	F	G	H
2645/001					**Weight 300g/10.6oz**			
METRIC (mm)	*133*	*114*	*86*	*10*	*51*	*46*	*7*	*22*
IMPERIAL (ins)	*5.20*	*4.50*	*3.40*	*0.39*	*2.00*	*1.80*	*0.28*	*0.87*

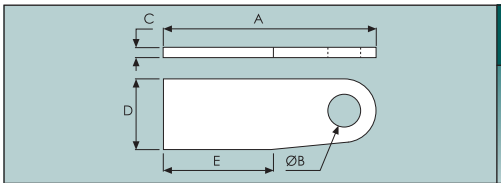

EYE PLATE

Pressed mild steel.

	A	B	C	D	E	F	G	H
3106/001	**Self-colour**				**Weight 260g/9.2oz**			
3106/011	**Zinc-plated**							
METRIC (mm)	*152*	*22*	*4.76*	*50.8*	*82.6*			
IMPERIAL (ins)	*6.00*	*0.90*	*0.19*	*2.00*	*3.25*			
3106/002	**Self-colour**				**Weight 310g/11oz**			
3106/012	**Zinc-plated**							
METRIC (mm)	*152*	*22*	*6.35*	*50.8*	*82.6*			
IMPERIAL (ins)	*6.00*	*0.90*	*0.25*	*2.00*	*3.25*			

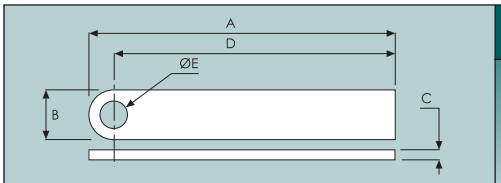

EYEPLATE

Pressed mild steel.

	A	B	C	D	E	F	G	H
3107/021	**Self colour**				**Weight 410g/14.5oz**			
3107/031	**Zinc plated**				**Weight 410g/14.5oz**			
METRIC (mm)	*244*	*40.0*	*6.35*	*224*	*22.0*			
IMPERIAL (ins)	*9.60*	*1.58*	*0.25*	*8.82*	*0.87*			
3107/022	**Self Colour**				**Weight 570g/1.3kg**			
3107/032	**Zinc Plated**				**Weight 570g/1.3kg**			
METRIC (mm)	*244*	*40.0*	*7.95*	*224*	*22.0*			
IMPERIAL (ins)	*9.60*	*1.58*	*0.31*	*8.82*	*0.87*			

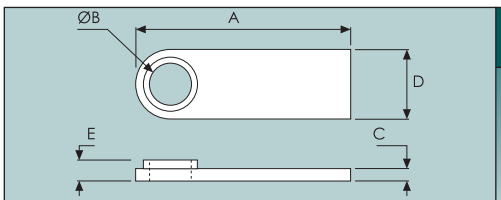

EYE PLATE

Aluminium.
Fitted with zinc-plated, steel bush.

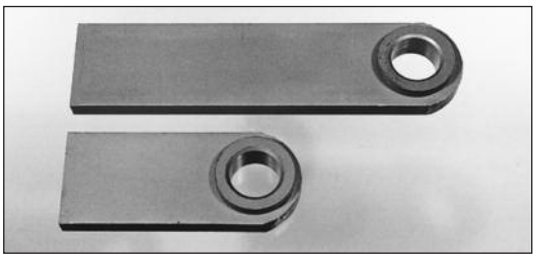

	A	B	C	D	E	F	G	H
3108/001					**Weight 130g/4.6oz**			
METRIC (mm)	*102*	*22*	*10*	*45*	*15*			
IMPERIAL (ins)	*4.00*	*0.90*	*039*	*1.80*	*0.60*			
3113/001					**Weight 220g/7.8oz**			
METRIC (mm)	*178*	*22*	*10*	*45*	*15*			
IMPERIAL (ins)	*7.00*	*0.90*	*0.39*	*1.80*	*0.60*			

Left 2609/001 | Centre 1035/001 | Right 1018/001

3093/001

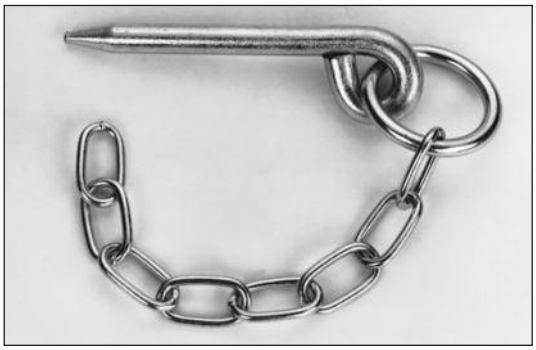

FLAT COTTER PINS

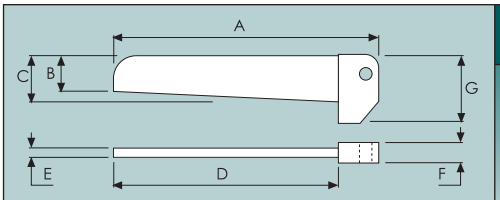

Zinc-plated steel.
Fitted with 191mm (7.5") chain.

	A	B	C	D	E	F	G	H
1018/001					**Weight 90g/3.2oz**			
METRIC (mm)	80	13	15	59	4	8	24	
IMPERIAL (ins)	3.15	0.53	0.60	2.32	0.16	0.32	0.95	
Fitted with Ø42mm (1.7") ring.								
1035/001					**Weight 90g/3.2oz**			
METRIC (mm)	81	13	16	63	3.5	11	20	
IMPERIAL (ins)	3.20	0.53	0.63	2.50	0.14	0.43	0.80	
Fitted with 'D' spring-ring.								
2609/001					**Weight 100g/3.5oz**			
METRIC (mm)	114	11	15	89	3	3	25.4	
IMPERIAL (ins)	4.50	0.43	0.60	3.50	0.12	0.12	1.00	
Fitted with Ø32mm (1.3") ring								

SLOTTED PLUG BOLTS

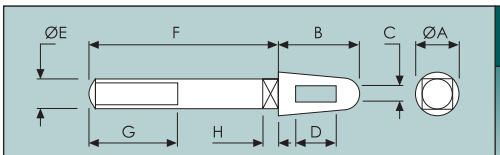

Self-colour, forged steel.
To suit 9mm ironwork.

	A	B	C	D	E	F	G	H
3093/001	**Supplied with nut**				**Weight 90g/3.2oz**			
METRIC (mm)	20	38	6	19	M12	42	38	
IMPERIAL (ins)	0.80	1.50	0.24	0.75		1.70	1.50	
2639/002	**Weld-on**				**Weight 60g/2.1oz**			
METRIC (mm)	20	38	6	16	12	10		
IMPERIAL (ins)	0.80	1.50	0.24	0.63	0.47	0.40		

ROUND COTTER

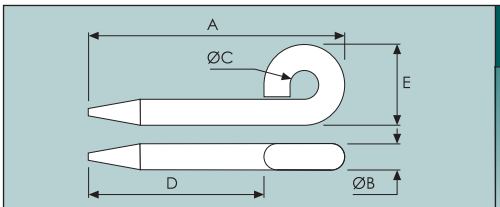

Zinc-plated, mild steel.
Fitted with Ø32mm ring and 189mm of chain.

	A	B	C	D	E	F	G	H
2582/002					**Weight 130g/4.6oz**			
METRIC (mm)	109	9.5	9.5	84	30			
IMPERIAL (ins)	4.30	0.37	0.37	3.31	1.18			
2582/003					**Weight 80g/2.8oz**			
METRIC (mm)	114	6	10	90	25.4			
IMPERIAL (ins)	4.50	0.24	0.40	3.54	1.00			
2582/007					**Weight 150g/5.3oz**			
METRIC (mm)	139.7	9.50	9.50	111	30			
IMPERIAL (ins)	5.50	0.37	0.37	4.37	1.18			

albert Jagger limited

Retaining Pins

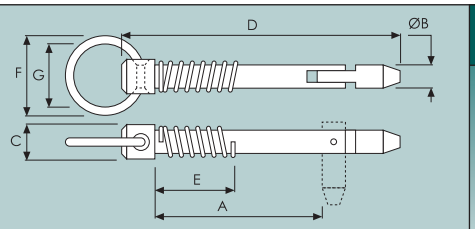

SWORD PINS

Zinc-plate/gold passivated assembly, with a 304 stainless steel tip.
Fitted with 191mm (7.5") chain and a Darlaston washer.

	A	B	C	D	E	F	G	H
1055/2054					**Weight 110g/3.9oz**			
METRIC (mm)	63	9.5	13	113	38	33	25	
IMPERIAL (ins)	2.48	0.37	0.51	4.45	1.50	1.30	0.98	
1055/3080					**Weight 210g/7.4oz**			
METRIC (mm)	88	12.5	19	148	41	39	31	
IMPERIAL (ins)	3.47	0.49	0.75	5.80	1.61	1.54	1.22	
1055/3092					**Weight 220g/7.8oz**			
METRIC (mm)	102	12.5	19	160	41	39	31	
IMPERIAL (ins)	4.02	0.49	0.75	6.30	1.61	1.54	1.22	
1055/4100					**Weight 350g/12.4oz**			
METRIC (mm)	110	16	22	178	58	39	31	
IMPERIAL (ins)	4.33	0.63	0.87	7.00	2.28	1.54	1.22	

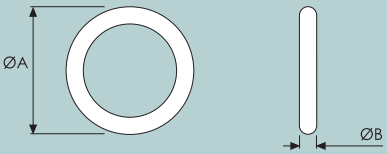

WELDED RINGS

Self-colour steel.

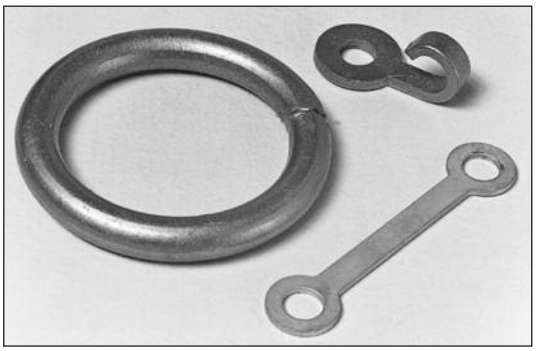

	A	B	C	D	E	F	G	H
5591/271								
METRIC (mm)	71	10						
IMPERIAL (ins)	2.79	0.40						
5591/272								
METRIC (mm)	63.5	12.7						
IMPERIAL (ins)	2.50	0.50						
5591/275								
METRIC (mm)	76.2	16						
IMPERIAL (ins)	3.00	0.68						

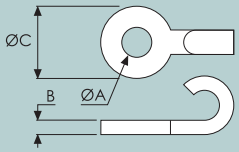

CHAIN FIXING TAB

(Darlaston washer).
Zinc plated, pressed, mild steel.

	A	B	C	D	E	F	G	H
4032/003					**Weight 10g/0.4oz**			
METRIC (mm)	7.93	3.18	23					
IMPERIAL (ins)	0.31	0.125	0.91					

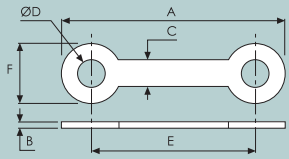

COTTER CHAIN TAB

Zinc-plated, pressed, mild steel.

	A	B	C	D	E	F	G	H
4032/001					**Weight 10g/0.4oz**			
METRIC (mm)	76	1.5	6.40	8	60	16		
IMPERIAL (ins)	3.00	0.06	0.25	0.32	2.36	0.63		

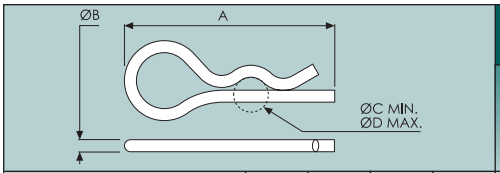

SPRING COTTER

Zinc-plated, steel.

	A	B	C	D	E	F	G	H
2312/001					**Weight 5g/0.2oz**			
METRIC (mm)	*43*	*2*	*8*	*14*				
IMPERIAL (ins)	*1.70*	*0.37*	*0.32*	*0.55*				
2312/002					**Weight 10g/0.4oz**			
METRIC (mm)	*67*	*3.5*	*11*	*19*				
IMPERIAL (ins)	*2.64*	*0.14*	*0.43*	*0.75*				
2312/003					**Weight 20g/0.8oz**			
METRIC (mm)	*75*	*4*	*13*	*20*				
IMPERIAL (ins)	*3.00*	*0.16*	*0.51*	*0.79*				
2312/004					**Weight 30g/1.1oz**			
METRIC (mm)	*107*	*5*	*20*	*30*				
IMPERIAL (ins)	*4.21*	*0.20*	*0.79*	*1.18*				

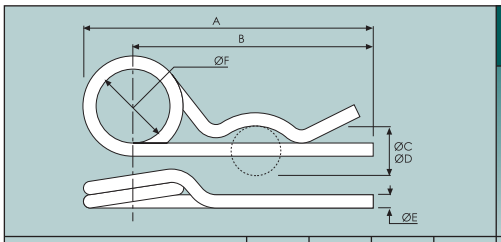

DOUBLE COIL 'R' CLIPS

Zinc-plated, spring steel.

	A	B	C	D	E	F	G	H
2313/020					**Weight 5g/0.2oz**			
METRIC (mm)	*57.0*	*50.0*	*8.0*	*14.0*	*2.0*	*10.0*		
IMPERIAL (ins)	*2.24*	*1.97*	*0.32*	*0.55*	*0.08*	*0.39*		
2313/030					**Weight 10g/0.4oz**			
METRIC (mm)	*73.0*	*62.0*	*14.0*	*20.0*	*3.0*	*16.0*		
IMPERIAL (ins)	*2.87*	*2.44*	*0.55*	*0.79*	*0.12*	*0.63*		
2313/040					**Weight 30g/1.1oz**			
METRIC (mm)	*94.5*	*79.0*	*17.0*	*24.0*	*4.0*	*23.0*		
IMPERIAL (ins)	*3.72*	*3.11*	*0.67*	*0.95*	*0.16*	*0.91*		
2313/050					**Weight 50g/1.8oz**			
METRIC (mm)	*110*	*92.0*	*18.0*	*30.0*	*5.0*	*26.0*		
IMPERIAL (ins)	*4.33*	*3.62*	*0.71*	*1.18*	*0.20*	*1.02*		
2313/060					**Weight 90g/3.2oz**			
METRIC (mm)	*141*	*120*	*24.0*	*36.0*	*6.0*	*30.0*		
IMPERIAL (ins)	*5.55*	*4.72*	*0.95*	*1.42*	*0.24*	*1.18*		

Retaining Pins

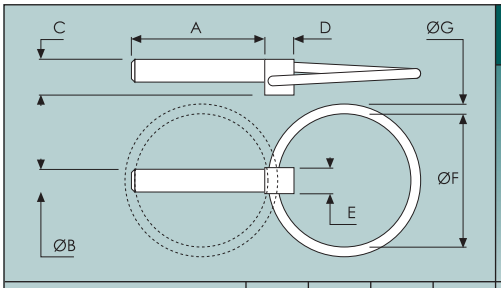

LINCH PINS

	A	B	C	D	E	F	G	H
1056/001	**Zinc plate/Gold Pass**				**Weight 20g/0.7oz**			
METRIC (mm)	*44*	*6*	*12*	*6*	*9*	*43*	*3.5*	
IMPERIAL (ins)	*1.73*	*0.24*	*0.47*	*0.24*	*0.35*	*1.38*	*0.14*	
1056/002	**Zinc plate/Gold Pass**				**Weight 30g/1.1oz**			
METRIC (mm)	*44*	*8*	*12*	*9*	*10*	*43*	*3.5*	
IMPERIAL (ins)	*1.73*	*0.32*	*0.47*	*0.35*	*0.39*	*1.38*	*0.14*	
1056/003	**Zinc plate/Gold Pass**				**Weight 50g/1.8oz**			
METRIC (mm)	*44*	*11*	*15*	*11*	*12*	*43*	*3.5*	
IMPERIAL (ins)	*1.73*	*0.43*	*0.59*	*0.43*	*0.47*	*1.38*	*0.14*	
1056/004	**Zinc plate/Gold Pass**				**Weight 60g/2.1oz**			
METRIC (mm)	*44*	*10*	*15*	*11*	*12*	*45*	*3.5*	
IMPERIAL (ins)	*1.73*	*0.39*	*0.59*	*0.43*	*0.47*	*1.77*	*0.14*	
1056/1006	**316 Stainless Steel**				**Weight 40g/1.4oz**			
METRIC (mm)	*44*	*6*	*13*	*8.5*	*8.5*	*44*	*3.5*	
IMPERIAL (ins)	*1.73*	*0.24*	*0.51*	*0.35*	*0.35*	*1.73*	*0.14*	
1056/1008	**316 Stainless Steel**				**Weight 48g/1.7oz**			
METRIC (mm)	*45*	*7.8*	*13*	*10.5*	*9*	*44*	*3.5*	
IMPERIAL (ins)	*1.77*	*0.31*	*0.51*	*0.41*	*0.35*	*1.73*	*0.14*	
1056/1010	**316 Stainless Steel**				**Weight 78g/2.8oz**			
METRIC (mm)	*60*	*10*	*15*	*11.5*	*10*	*59*	*3.5*	
IMPERIAL (ins)	*2.36*	*0.39*	*0.59*	*0.45*	*0.39*	*2.32*	*0.14*	
1074/014	**Zinc plate/Gold Pass**				**Weight 70g/2.5oz**			
METRIC (mm)	*44*	*11*	*14*	*11*	*10*	*41*	*3.5*	
IMPERIAL (ins)	*1.73*	*0.43*	*0.55*	*0.43*	*0.39*	*1.61*	*0.14*	

Fitted with 180mm of chain.

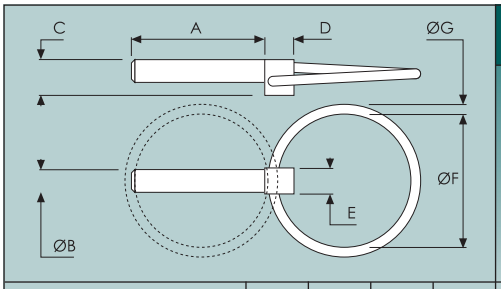

LINCH PINS & TAGS

Zinc-plated steel with a gold passivated finish. C/w 180mm x Ø1.5mm galvanised wire tag with loop each designed to take up to Ø10 pin.

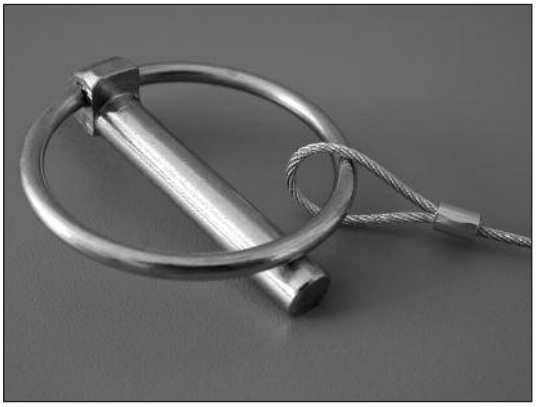

	A	B	C	D	E	F	G	H
1056/901					**Weight 30g/1.1oz**			
METRIC (mm)	*44*	*6*	*12*	*6*	*9*	*43*	*3.5*	
IMPERIAL (ins)	*1.73*	*0.24*	*0.47*	*0.24*	*0.35*	*1.38*	*0.14*	
1056/902					**Weight 40g/1.4oz**			
METRIC (mm)	*44*	*8*	*12*	*9*	*10*	*43*	*3.5*	
IMPERIAL (ins)	*1.73*	*0.32*	*0.47*	*0.35*	*0.39*	*1.38*	*0.14*	
1056/903					**Weight 50g/1.8oz**			
METRIC (mm)	*44*	*11*	*15*	*11*	*12*	*43*	*3.5*	
IMPERIAL (ins)	*1.73*	*0.43*	*0.59*	*0.43*	*0.47*	*1.38*	*0.14*	

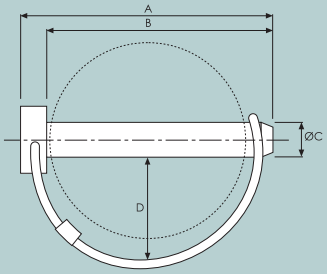

SHAFT LOCKING PINS

Zinc-plated, steel with a spring steel wire retaining loop.

	A	B	C	D	E	F	G	H
1056/806	**Clear Passivated**				**Weight 30g/1.1oz**			
METRIC (mm)	*66.0*	*60.0*	*6.3*	*38.0*				
IMPERIAL (ins)	*2.60*	*2.36*	*0.25*	*1.50*				
1056/808	**Gold passivated**				**Weight 50g/1.8oz**			
METRIC (mm)	*76.0*	*70.0*	*7.7*	*35.0*				
IMPERIAL (ins)	*2.99*	*2.76*	*0.30*	*1.38*				
1056/810	**Gold passivated**				**Weight 60g/2.1oz**			
METRIC (mm)	*77.0*	*70.0*	*9.4*	*38.0*				
IMPERIAL (ins)	*3.03*	*2.76*	*0.37*	*1.50*				
1056/811	**Gold passivated**				**Weight 110g/3.9oz**			
METRIC (mm)	*108*	*100*	*11.2*	*54*				
IMPERIAL (ins)	*4.25*	*3.94*	*0.44*	*2.13*				

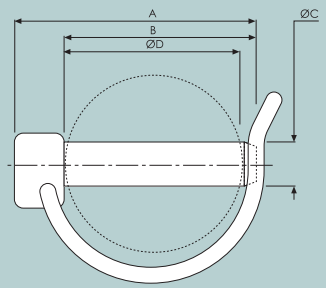

PIPE PINS

Zinc-plated, steel with a gold passivated finish.
Overcentre snap action with the spring steel retaining loop.

	A	B	C	D	E	F	G	H
1056/797					**Weight 30g/1.1oz**			
METRIC (mm)	*53.0*	*44.0*	*6.0*	*40.0*				
IMPERIAL (ins)	*2.09*	*1.73*	*0.24*	*1.58*				
1056/798					**Weight 50g/1.8oz**			
METRIC (mm)	*68.0*	*60.0*	*8.0*	*55.0*				
IMPERIAL (ins)	*2.68*	*2.36*	*0.32*	*2.17*				
1056/799					**Weight 70g/2.5oz**			
METRIC (mm)	*70.0*	*60.0*	*10.0*	*55.0*				
IMPERIAL (ins)	*2.76*	*2.36*	*0.39*	*2.17*				

Side & Tailboard Fittings

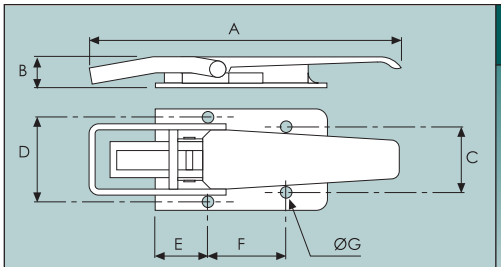

PLANT-ON TAILBOARD CATCH

Spring loaded, overcentre action.
Pressed steel mechanism with a forged steel tongue.
Zinc plated finish.
Supplied with a self colour, pressed steel keeper (refer 5484/010 below).

	A	B	C	D	E	F	G	H
5482/011	**Catch**				**Weight 1kg/2.3lb**			
METRIC (mm)	*260*	*29*	*58*	*75*	*49*	*70*	*8.5*	
IMPERIAL (ins)	*10.2*	*1.14*	*2.28*	*2.95*	*1.93*	*2.76*	*0.34*	

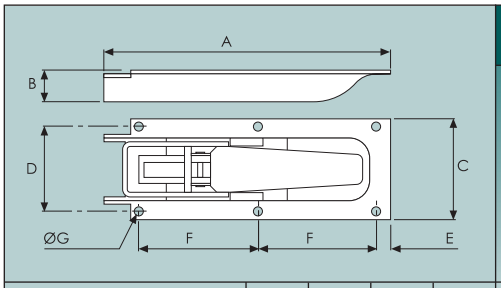

RECESSED TAILBOARD CATCH

Overcentre action.
Pressed steel mechanism with a forged steel tongue.
Zinc plated finish.
Supplied with a self colour, pressed steel keeper (refer 5484/010 below).

	A	B	C	D	E	F	G	H
5484/011	**Catch**				**Weight 1.4kg/3.1lb**			
METRIC (mm)	*330*	*25.4*	*120*	*100*	*7.5*	*137*	*5*	
IMPERIAL (ins)	*13*	*1.00*	*4.72*	*3.94*	*0.30*	*5.39*	*0.20*	

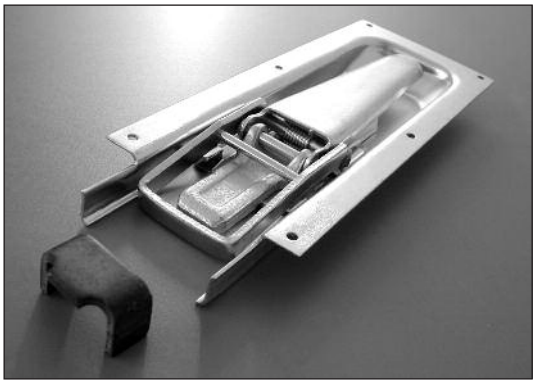

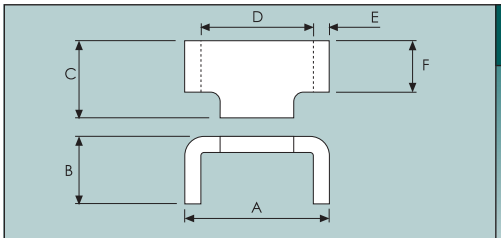

KEEPER

Self colour, pressed mild steel.
For use with tailboard catches 5482/011 & 5484/011.

	A	B	C	D	E	F	G	H
5484/010	**keeper**				**Weight 70g/2.5oz**			
METRIC (mm)	*48*	*27*	*27*	*38*	*5*	*20*		
IMPERIAL (ins)	*1.90*	*1.06*	*1.06*	*1.50*	*0.20*	*0.79*		

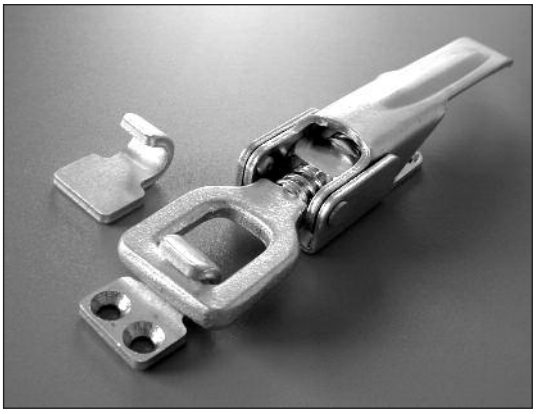

Left: 1103/001 Right: 1103/011

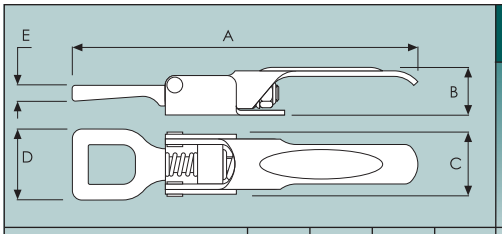

'UNI-LOK' OVERCENTRE FASTENER

Adjustable spring tensioner.
Zinc plated steel.
Fixing via 4 x Ø6mm c'sunk screws (not supplied).
NB. Dimension A is adjustable from 215 to 225mm.
See below for hook details.

	A	B	C	D	E	F	G	H
0650/001					**Weight 510g/1.1lb**			
METRIC (mm)	*225*	*32.0*	*42.0*	*46.0*	*10.0*			
IMPERIAL (ins)	*8.86*	*1.26*	*1.65*	*1.81*	*0.39*			

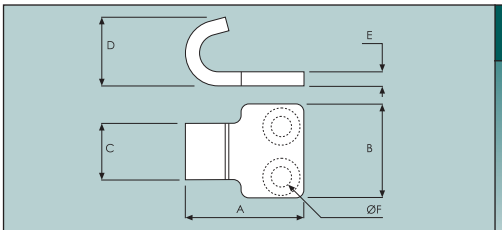

HOOK

Zinc plated steel.
For use with 0650/001 fastener.

	A	B	C	D	E	F	G	H
0650/021	**Screw on**				**Weight 40g/1.4oz**			
0650/022	**Weld on**				**Weight 40g/1.4oz**			
METRIC (mm)	*38.0*	*30.0*	*18.0*	*22.0*	*5.00*	*6.50*		
IMPERIAL (ins)	*1.50*	*1.18*	*0.71*	*0.87*	*0.20*	*0.26*		

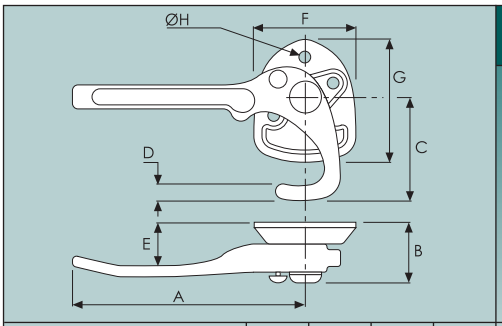

TAILBOARD FASTENER

Galvanised finish.

	A	B	C	D	E	F	G	H
1103/001	**Left hand (shown)**				**Weight 750g/1.7lb**			
1103/002	**Right hand**							
METRIC (mm)	*170*	*45*	*80*	*13.5*	*36*	*76*	*95*	*8.6*
IMPERIAL (ins)	*6.69*	*1.77*	*3.15*	*0.53*	*1.42*	*2.99*	*3.74*	*0.34*

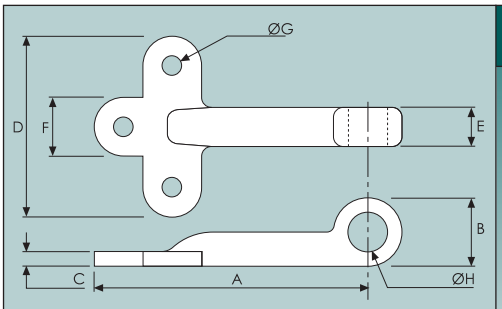

KEEPER

Galvanised finish.
For use with 1103/001 & 002.

	A	B	C	D	E	F	G	H
1103/011					**Weight 220g/7.8oz**			
METRIC (mm)	*121*	*28*	*6*	*74*	*16*	*24*	*8*	*16*
IMPERIAL (ins)	*4.76*	*1.10*	*0.24*	*2.91*	*0.63*	*0.95*	*0.32*	*0.63*

Side & Tailboard Fittings

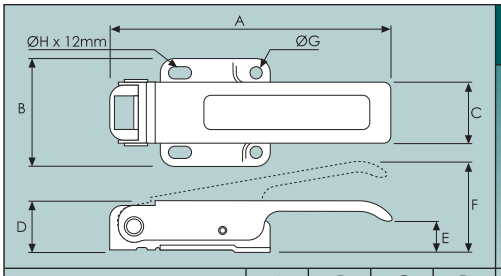

'SNAPFAST' TAILBOARD FASTENER

Zinc-plated pressed steel. A double spring system, which automatically locks the retainer in position when the handle is pushed down. Raising the handle releases the keeper. A choice of two keepers are available, see below.

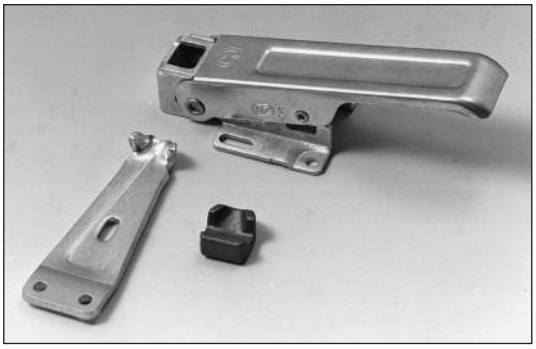

	A	B	C	D	E	F	G	H
9827/6200					**Weight 370g/13oz**			
METRIC (mm)	*181*	*70*	*40*	*32*	*25*	*52*	*6.5*	*6.5*
IMPERIAL (ins)	*7.13*	*2.76*	*1.58*	*1.26*	*0.98*	*2.05*	*0.26*	*0.26*

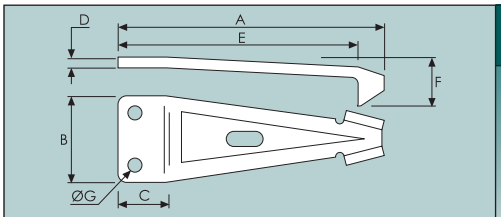

BOLT-ON KEEPER

Pressed, mild steel with a zinc-plated finish. For use with 9827/6200.

	A	B	C	D	E	F	G	H
9827/6201					**Weight 150g/5.3oz**			
METRIC (mm)	*123*	*40*	*18*	*5*	*110*	*27*	*6.5*	
IMPERIAL (ins)	*4.84*	*1.58*	*0.71*	*0.20*	*4.33*	*1.06*	*0.26*	

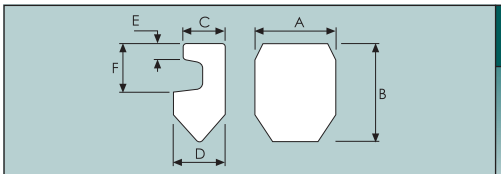

WELD-ON KEEPER

Self colour, cast iron. For use with 9827/6200.

	A	B	C	D	E	F	G	H
9827/6203					**Weight 40g/1.4oz**			
METRIC (mm)	*25*	*30*	*13*	*17*	*5*	*16*		
IMPERIAL (ins)	*0.98*	*1.18*	*0.51*	*0.67*	*0.20*	*0.63*		

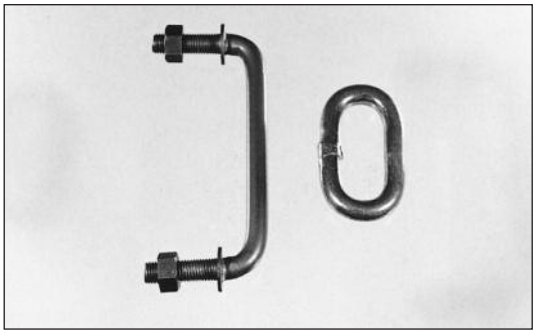

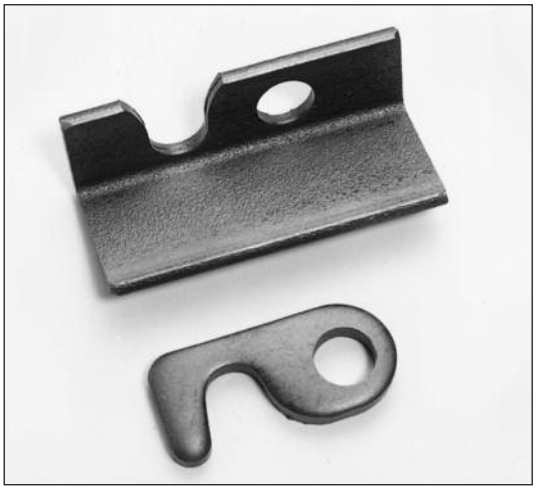

Top: 0142/001 Bottom: 0143/001

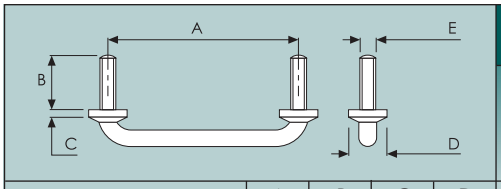

LOCKING BAR FASTENER (STAPLE)

Zinc plated steel.
Supplied with two M10 nuts.

	A	B	C	D	E	F	G	H
1078/001					**Weight 150g/5.3oz**			
METRIC (mm)	*115*	*32*	*2*	*23*	*M10*			
IMPERIAL (ins)	*4.53*	*1.26*	*0.08*	*0.91*				

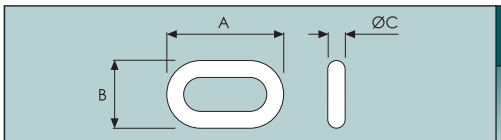

LOCKING BAR FASTENER (RING)

For use with 1078/001.

	A	B	C	D	E	F	G	H
1078/002	**Zinc plated**				**Weight 80g/2.8oz**			
METRIC (mm)	*68*	*38*	*9.5*					
IMPERIAL (ins)	*2.68*	*1.50*	*0.37*					
1078/003	**Zinc plated**				**Weight 140g/5oz**			
METRIC (mm)	*103*	*46*	*10*					
IMPERIAL (ins)	*4.10*	*1.81*	*0.4*					

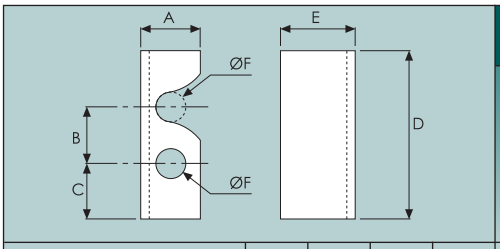

TAILBOARD CAM BRACKET

Pressed, self-colour steel.

	A	B	C	D	E	F	G	H
0142/001	**Left hand (shown)**				**Weight 410g/14.5oz**			
0142/002	**Right hand**							
METRIC (mm)	*40*	*38*	*39*	*116*	*40*	*20*		
IMPERIAL (ins)	*1.60*	*1.50*	*1.54*	*4.57*	*1.58*	*0.80*		

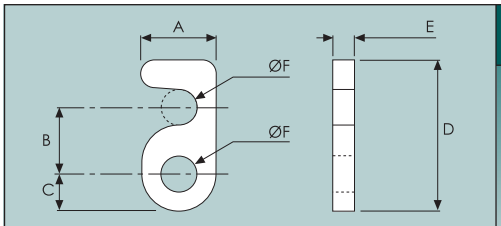

TAILBOARD CAM

Pressed, self-colour steel.
For use with 0142/001 & 2.

	A	B	C	D	E	F	G	H
0143/001					**Weight 170g/6oz**			
METRIC (mm)	*40*	*38*	*17*	*82*	*10*	*20*		
IMPERIAL (ins)	*1.60*	*1.50*	*0.70*	*3.20*	*0.39*	*0.80*		

Side & Tailboard Fittings

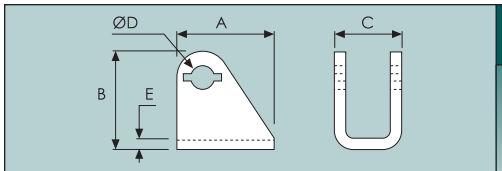

RETAINING BRACKET

Pressed, self-colour steel.

	A	B	C	D	E	F	G	H
3987/001	**For 20mm bar**				**Weight 180g/6.4oz**			
METRIC (mm)	*50*	*52*	*35*	*11*	*5*			
IMPERIAL (ins)	*2.00*	*2.05*	*1.40*	*0.43*	*0.20*			
3987/003	**For 25mm bar**				**Weight 180g/6.4oz**			
METRIC (mm)	*50*	*49*	*39*	*11*	*5*			
IMPERIAL (ins)	*2.00*	*1.93*	*1.54*	*0.43*	*0.20*			

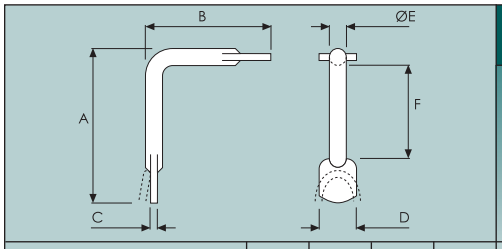

RETAINING PIN

Zinc plated pin, complete with 191mm (7.5"), zinc plated, straight link chain.

	A	B	C	D	E	F	G	H
3987/002					**Weight 110g/3.9oz**			
METRIC (mm)	*82*	*72*	*5*	*14*	*9.5*	*57*		
IMPERIAL (ins)	*3.20*	*2.80*	*0.20*	*0.60*	*0.37*	*2.24*		

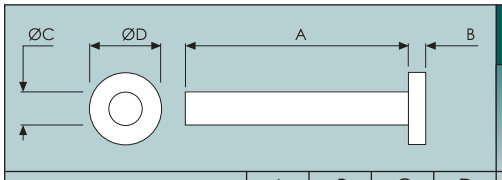

SHOULDER PIN

Self colour steel.

	A	B	C	D	E	F	G	H
1073/002					**Weight 300g/10.6oz**			
METRIC (mm)	*90*	*11*	*20*	*38*				
IMPERIAL (ins)	*3.54*	*0.43*	*0.80*	*1.50*				

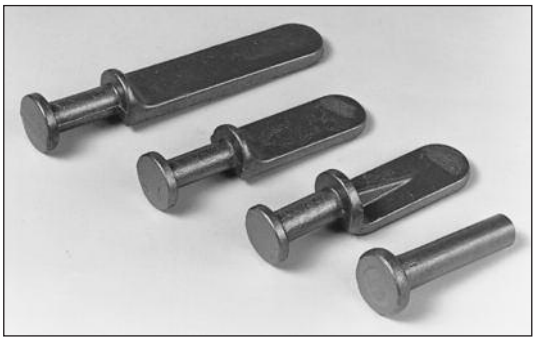

Left to right:
4048/003, 4048/006, 4048/001, 1073/002.

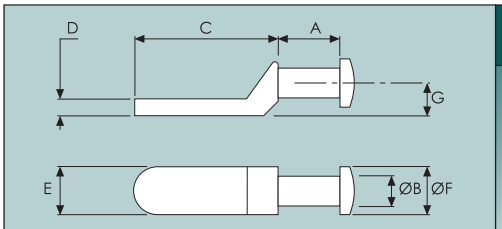

TAILBOARD LUGS

Self colour steel, to weld-on.

	A	B	C	D	E	F	G	H
4048/001					**Weight 840g/1.9lb**			
METRIC (mm)	*49*	*26*	*101*	*13*	*45*	*45*	*25*	
IMPERIAL (ins)	*1.90*	*1.02*	*4.00*	*0.51*	*1.77*	*1.77*	*0.98*	
4048/004					**Weight 320g/11.3oz**			
METRIC (mm)	*38*	*19*	*94*	*7*	*32*	*32*	*20*	
IMPERIAL (ins)	*1.50*	*0.75*	*3.70*	*0.26*	*1.26*	*1.26*	*0.79*	
4048/007					**Weight 530g/1.2lb**			
METRIC (mm)	*46*	*25*	*89*	*10*	*38*	*38*	*19*	
IMPERIAL (ins)	*1.81*	*0.98*	*3.50*	*0.39*	*1.50*	*1.50*	*0.75*	

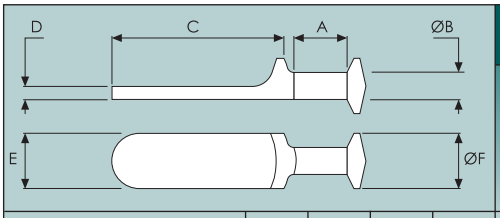

TAILBOARD LUGS

Self colour steel, to weld-on.

	A	B	C	D	E	F	G	H
4048/003					**Weight 620g/1.4lb**			
METRIC (mm)	*45*	*18*	*150*	*9.5*	*36*	*24*		
IMPERIAL (ins)	*1.77*	*0.71*	*5.91*	*0.37*	*1.42*	*1.34*		

Left to right:
4051/001, 4051/003, 4051/004, 2582/002.

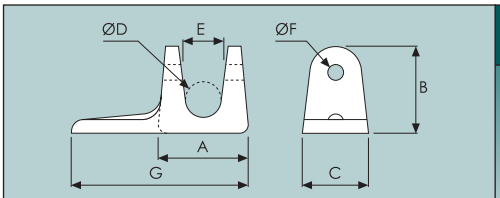

TAILBOARD FORKETS

Self colour, forged steel.
For retaining pin see page a13.

	A	B	C	D	E	F	G	H
4051/001					**Weight 760g/1.7lb**			
METRIC (mm)	*58*	*59*	*40*	*27*	*30*	*11*	*130*	
IMPERIAL (ins)	*2.30*	*2.32*	*1.60*	*1.06*	*1.20*	*0.43*	*5.12*	
4051/003					**Weight 450g/1lb**			
METRIC (mm)	*54*	*48*	*35*	*21*	*25*	*11*	*108*	
IMPERIAL (ins)	*2.13*	*1.89*	*1.40*	*0.83*	*0.98*	*0.43*	*4.25*	
4051/004					**Weight 310g/11oz**			
METRIC (mm)	*54*	*48*	*35*	*21*	*25*	*11*		
IMPERIAL (ins)	*2.13*	*1.89*	*1.40*	*0.83*	*0.98*	*0.43*		
4051/005	**Short pattern**				**Weight 310g/10.9oz**			
METRIC (mm)	*51*	*49*	*32*	*21*	*25*	*11*	*90*	
IMPERIAL (ins)	*2.01*	*1.93*	*1.26*	*0.83*	*0.98*	*0.43*	*3.54*	
4051/007	**Short pattern**				**Weight 390g/13.8oz**			
METRIC (mm)	*62*	*54*	*32*	*26*	*31*	*11*	*110*	
IMPERIAL (ins)	*2.44*	*2.13*	*1.26*	*1.02*	*1.22*	*0.43*	*4.33*	

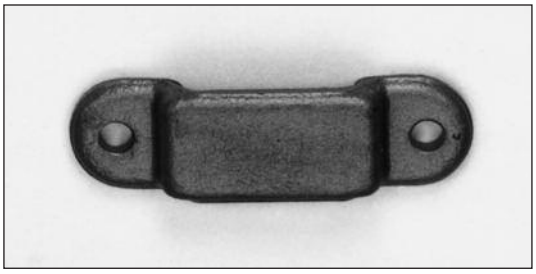

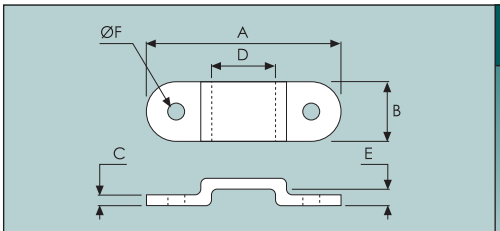

STAPLE

Self colour steel, to bolt-on.

	A	B	C	D	E	F	G	H
7024/001					**Weight 290g/10oz**			
METRIC (mm)	*124*	*37*	*8*	*40*	*8*	*10.3*		
IMPERIAL (ins)	*4.90*	*1.50*	*0.32*	*1.60*	*0.32*	*0.41*		

Side & Tailboard Fittings

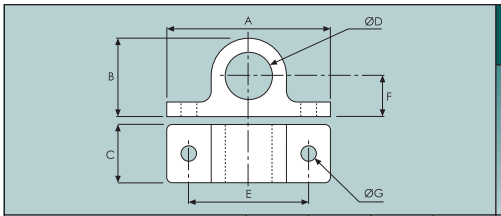

LOCKING BAR BRACKET

Self-colour, forged steel.
Bolt-on.

	A	B	C	D	E	F	G	H
4050/002	**To suit 25mm bar**				**Weight 365g/12.9oz**			
METRIC (mm)	*90*	*42*	*32*	*26*	*67*	*24*	*8.5*	
IMPERIAL (ins)	*3.54*	*1.65*	*1.26*	*1.02*	*2.64*	*0.95*	*0.34*	

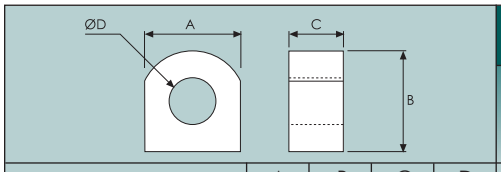

LOCKING BAR BRACKETS

Self-colour, forged steel.
Weld-on.

	A	B	C	D	E	F	G	H
4109/001	**To suit 20mm bar**				**Weight 270g/9.5oz**			
METRIC (mm)	*45*	*45*	*27*	*21*				
IMPERIAL (ins)	*1.80*	*1.80*	*1.06*	*0.83*				
4109/002	**To suit 25mm bar.**				**Weight 230g/8.1oz**			
METRIC (mm)	*45*	*45*	*27*	*26*				
IMPERIAL (ins)	*1.80*	*1.80*	*1.06*	*1.02*				

Left: 4109/002 *Right: 4109/001*

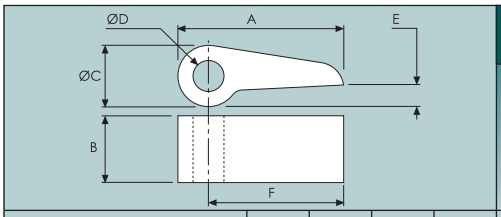

LOCKING BAR TABS

Self-colour, forged steel.

	A	B	C	D	E	F	G	H
4044/004	**To suit 20mm bar.**				**Weight 330g/11.6oz**			
METRIC (mm)	*80*	*38*	*36*	*21*	*6*	*62*		
IMPERIAL (ins)	*3.15*	*1.50*	*1.42*	*0.83*	*0.24*	*2.44*		
4044/005	**To suit 25mm bar**				**Weight 325g/11.5oz**			
METRIC (mm)	*80*	*38*	*36*	*26*	*6*	*62*		
IMPERIAL (ins)	*3.15*	*1.50*	*1.42*	*1.02*	*0.24*	*2.44*		
4150/003	**To suit 20mm bar.**				**Weight 370g/13oz**			
METRIC (mm)	*96*	*36*	*36*	*21*	*28*	*78*		
IMPERIAL (ins)	*3.78*	*1.42*	*1.42*	*0.83*	*1.10*	*3.07*		
4150/004	**To suit 25mm bar**				**Weight 365g/12.9oz**			
METRIC (mm)	*96*	*36*	*36*	*26*	*28*	*78*		
IMPERIAL (ins)	*3.78*	*1.42*	*1.42*	*1.02*	*1.10*	*3.07*		

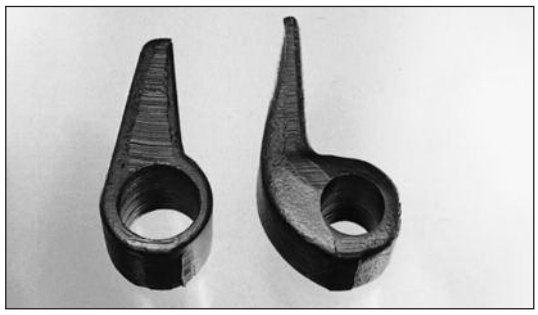

Left: 4044/005 *Right: 4150/003*

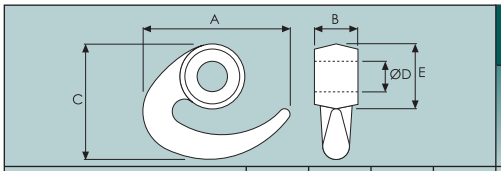

LOCKING BAR HOOKS

Self-colour, forged steel.

	A	B	C	D	E	F	G	H
4047/001	**To suit 20mm bar.**				**Weight 300g/10.6oz**			
METRIC (mm)	*78*	*25.4*	*73*	*21*	*39*			
IMPERIAL (ins)	*3.10*	*1.00*	*2.90*	*0.83*	*1.54*			
4047/002	**To suit 25mm bar**				**Weight 240g/8.5oz**			
METRIC (mm)	*86*	*26*	*68*	*26*	*36*			
IMPERIAL (ins)	*3.39*	*1.02*	*2.68*	*1.02*	*1.41*			

Rope Hooks

Left - 2125/002 Right - 1022/001

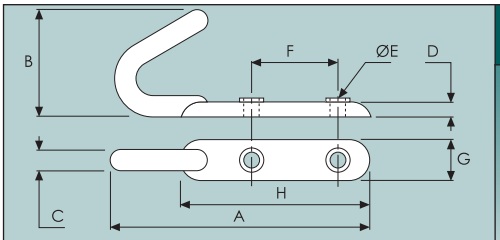

ROPE HOOKS

Bolt-on.

	A	B	C	D	E	F	G	H
2125/001 2125/002	**Self-colour steel Zinc-plated**				**Weight 210g/7.4oz**			
METRIC (mm)	*138*	*74*	*13*	*8*	*8.5*	*48*	*23*	*94*
IMPERIAL (ins)	*5.43*	*2.91*	*0.51*	*0.32*	*0.33*	*1.89*	*0.91*	*3.70*
2125/003 2125/013	**Self-colour steel Zinc-plated**				**Weight 110g/3.8oz**			
METRIC (mm)	*99*	*58*	*10*	*8*	*8.5*	*38*	*23*	*69*
IMPERIAL (ins)	*3.89*	*2.28*	*0.39*	*0.32*	*0.33*	*1.50*	*0.91*	*2.72*
1022/001	**Aluminium**				**Weight 60g/2.1oz**			
METRIC (mm)	*128*	*52*	*11*	*9*	*8.5*	*49*	*23*	*84*
IMPERIAL (ins)	*5.04*	*2.05*	*0.43*	*0.35*	*0.33*	*1.93*	*0.91*	*3.31*

2127/001

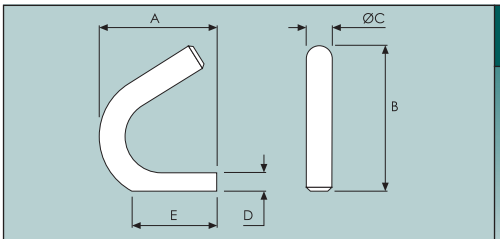

ROPE HOOKS

Weld-on.

	A	B	C	D	E	F	G	H
2127/001	**Self-colour steel**				**Weight 170g/6oz**			
METRIC (mm)	*75*	*77*	*14*	*13*	*45*			
IMPERIAL (ins)	*2.95*	*3.03*	*0.55*	*0.51*	*1.77*			
2127/002	**Self-colour steel**				**Weight 120g/4.2oz**			
METRIC (mm)	*67*	*79*	*12*	*10*	*45*			
IMPERIAL (ins)	*2.64*	*3.11*	*0.47*	*0.39*	*1.77*			
2127/102					**Weight 250g/8.8oz**			
METRIC (mm)	*86*	*83*	*16*	*13*	*60*			
IMPERIAL (ins)	*3.39*	*3.27*	*0.63*	*0.51*	*2.36*			
2116/001	**Aluminium**				**Weight 50g/1.8oz**			
METRIC (mm)	*74*	*77*	*13*	*12*	*48*			
IMPERIAL (ins)	*2.91*	*3.03*	*0.51*	*0.47*	*1.89*			

Rope Hooks

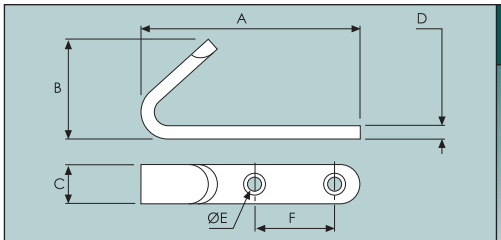

ROPE HOOK

Pressed, mild steel.

	A	B	C	D	E	F	G	H
1021/001	**Self colour**				**Weight 73g/2.6oz**			
METRIC (mm)	*89.0*	*40.0*	*20.0*	*5.00*	*7.00*	*32.0*		
IMPERIAL (ins)	*3.50*	*1.58*	*0.79*	*0.20*	*0.28*	*1.26*		
1021/011	**Zinc Plated**				**Weight 68g/2.4oz**			
METRIC (mm)	*86.0*	*40.0*	*20.0*	*5.50*	*7.00*	*32.0*		
IMPERIAL (ins)	*3.39*	*1.58*	*0.79*	*0.20*	*0.28*	*1.26*		

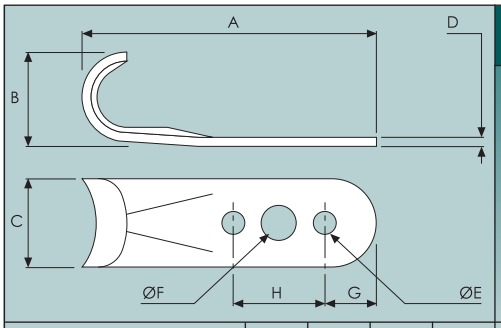

ROPE HOOK

Screw fixing.
Zinc-plated, pressed mild steel.

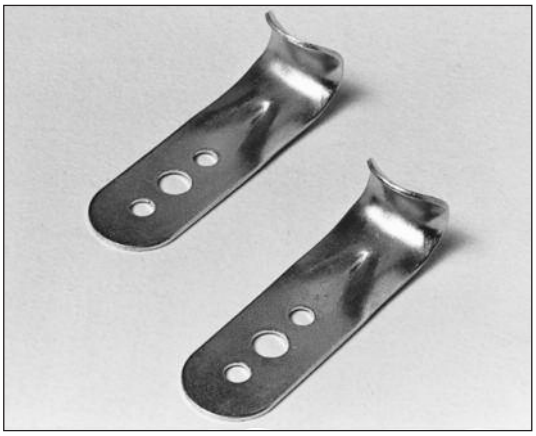

	A	B	C	D	E	F	G	H
1021/101					**Weight 10g/0.4oz**			
METRIC (mm)	*62.5*	*20.0*	*19.0*	*1.20*	*5.00*	*7.00*	*11.0*	*19.0*
IMPERIAL (ins)	*2.46*	*0.79*	*0.75*	*0.05*	*0.20*	*0.28*	*0.43*	*0.75*

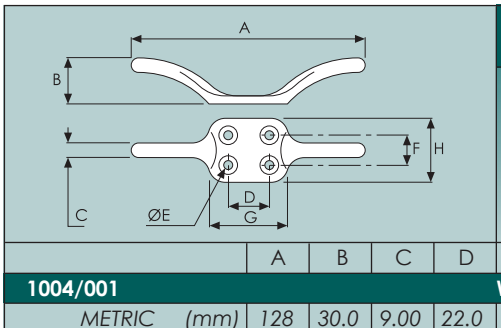

DOUBLE ROPE HOOK

Screw fixing.
Self-colour, mild steel.

	A	B	C	D	E	F	G	H
1004/001					**Weight 100g/3.5oz**			
METRIC (mm)	*128*	*30.0*	*9.00*	*22.0*	*5.50*	*17.0*	*43.0*	*32.0*
IMPERIAL (ins)	*5.04*	*1.18*	*035*	*0.87*	*0.22*	*0.67*	*1.69*	*1.26*

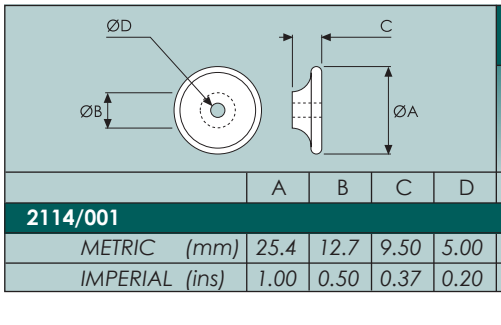

LASHING CLEAT

Single screw fixing.
Black plastic.

	A	B	C	D	E	F	G	H
2114/001								
METRIC (mm)	*25.4*	*12.7*	*9.50*	*5.00*				
IMPERIAL (ins)	*1.00*	*0.50*	*0.37*	*0.20*				

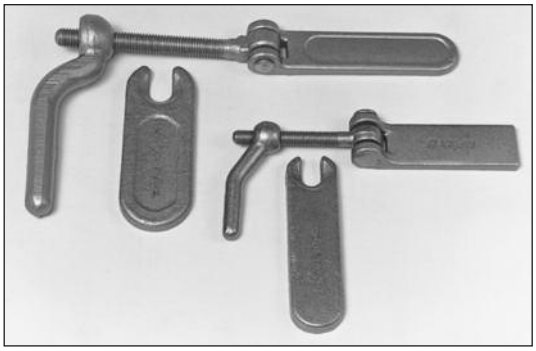

Top left - 2094/201
Centre left - 2094/330
Centre right - 2056/100
Bottom right - 2056/101

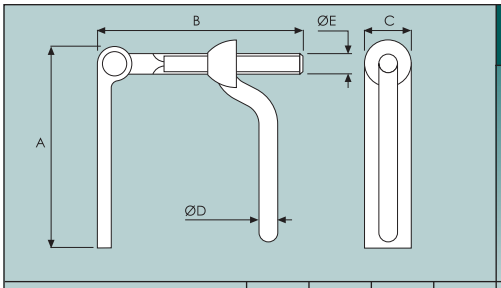

RAMP FASTENERS

		A	B	C	D	E	F	G	H
2056/100		**M12, self-colour**				**Weight 543g/1.2lb**			
METRIC	*(mm)*	*127*	*112.5*	*38*	*12.7*	*M12*			
IMPERIAL	*(ins)*	*5.00*	*4.43*	*1.50*	*0.50*				
2056/201		**Acme, self-colour**				**Weight 1.2kg/2.7lb**			
2056/221		**Acme, zinc-plated**							
METRIC	*(mm)*	*165*	*170*	*38*	*20*	*acme*			
IMPERIAL	*(ins)*	*6.5*	*6.69*	*1.50*	*0.79*	*0.625*			
2094/201		**M16, self-colour**				**Weight 1.2kg/2.7lb**			
METRIC	*(mm)*	*165*	*170*	*38*	*20*	*M16*			
IMPERIAL	*(ins)*	*6.5*	*6.69*	*1.50*	*0.79*				

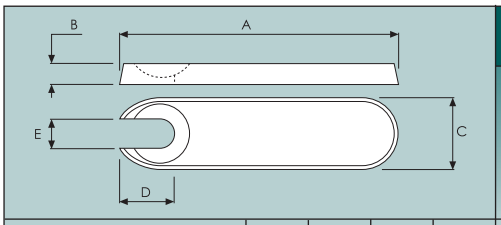

FASTENING PLATES

		A	B	C	D	E	F	G	H
2056/101		**Self-colour**				**Weight 360g/13oz**			
METRIC	*(mm)*	*150*	*9.5*	*38*	*28*	*14*			
IMPERIAL	*(ins)*	*6.00*	*0.37*	*1.50*	*1.10*	*0.55*			
2094/330		**Self-colour**				**Weight 470g/1.04lb**			
2094/340		**Zinc-plated**							
METRIC	*(mm)*	*145*	*10*	*52.5*	*38*	*17*			
IMPERIAL	*(ins)*	*5.71*	*0.39*	*2.07*	*1.50*	*0.67*			

COMPLETE ASSEMBLY	THREAD	FINISH	FASTENER (NO PLATE)	PLATE ONLY
2056/0003	M12	Self colour	2056/100	2056/101
2056/200	Acme	Self-colour	2056/201	2094/330
2056/220	Acme	Zinc-plated	2056/221	2094/340
2094/200	M16	Self-colour	2094/201	2094/330

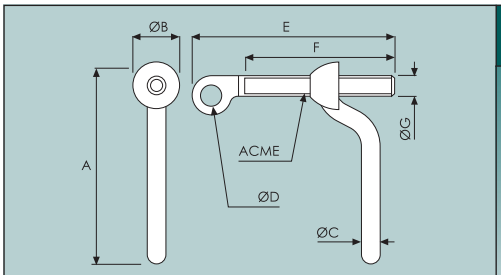

RAMP FASTENERS

Zinc plated steel.
Acme thread.
Supplied as individual items.

		A	B	C	D	E	F	G	H
2056/223		**Shank only**				**Weight 242g/8.5oz**			
2056/224		**Handle only**				**Weight 434g/15.3oz**			
METRIC	*(mm)*	*175*	*38.0*	*18.0*	*13.0*	*175*	*142*	*15.5*	
IMPERIAL	*(ins)*	*6.89*	*1.50*	*0.71*	*0.51*	*6.89*	*5.59*	*0.61*	

Ramp Springs

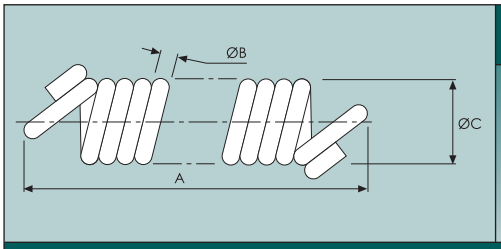

FOULGER RAMP SPRING	
2103/001	3cwt, lightweight spring
	A = 1240mm (4'1")
	B = Ø11.1mm (0.44")
	C = Ø55mm (2.2")
2103/002	4cwt, heavyweight spring
	A = 1210mm (4')
	B = Ø12.5mm (0.5")
	C = Ø69mm (2.72")
2104/001	Left hand, tensioner unit (blue)
	c/w top spring hook
2104/002	Right hand, tensioner unit (red)
	c/w top spring hook
2104/003	Adjusting hook
2104/005	Right hand, spring retainer hook
2104/006	Left hand, spring retainer hook

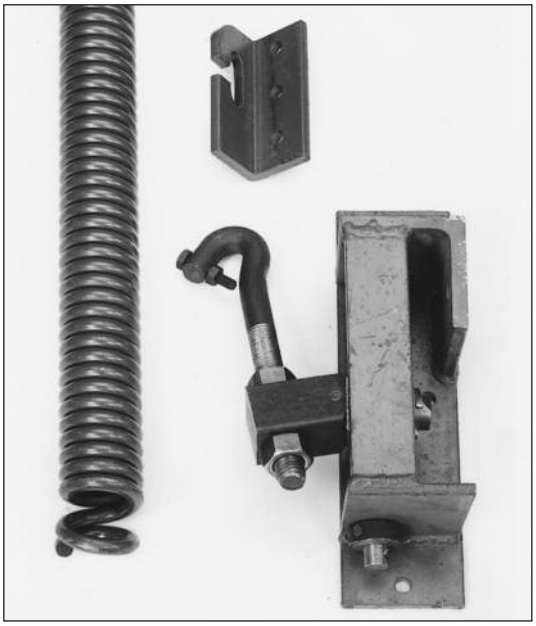

• FITTING INSTRUCTIONS • FITTING INSTRUCTIONS • FITTING INSTRUCTIONS • FITTING INSTRUCTIONS •

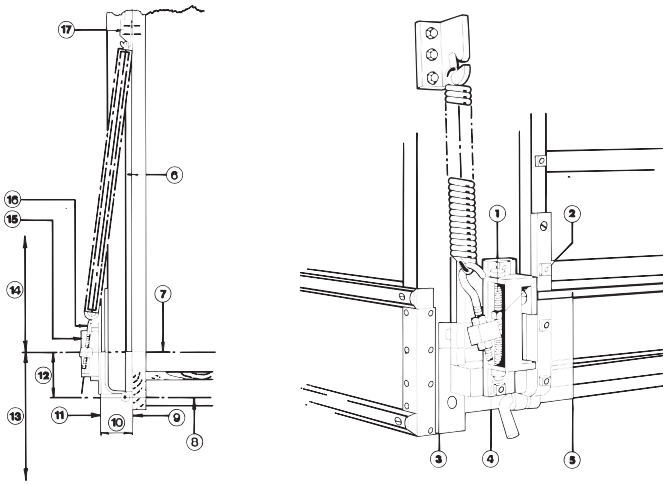

1. *Adjusting screw.*
2. *Locking nut.*
3. *Hook nuts.*
4. *Adjusting nuts.*
5. *Ø12.7mm (.5") tension bar.*
6. *Ramp.*
7. *Centre line of pivot.*
8. *Centre line of hinge.*
9. *Face of bearer.*
10. *76-125mm (3-5").*
11. *Face of pivot block assembly.*
12. *178mm (7").*
13. *Down for weaker.*
14. *Up for stronger.*
15. *Pivot block assembly.*
16. *Hook.*
17. *Hook.*

Bolt pivot bearing block assemblies (15) to each edge of ramp with centre line of pivot joint (7) approximately 178mm (7") from centre line of hinge (8).

To move pivot, slack off locking nut (2) and turn adjusting nut (4) in required direction.

Fit ends of spring to hooks (16) and (17) and bolt in position. When pivot bearing block is correctly placed, take up about 4 turns on bottom hook nut (3) to ensure sufficient spring tension to hold ramp vertical.

It is advantageous, but not essential, to fix the pivot block assemblies as illustrated, ie. 76-125mm (3-5") between faces (9) and (11).

If pivot block assemblies are not on bearers, a wooden block of appropriate thickness can be inserted to make up the 76-125mm (3-5").

IMPORTANT: A Ø12.5mm (0.5") tension bar (5) should be fitted, as shown, between the two assemblies. Two Ø13.5mm (0.53") holes are provided in the 76mm (3") x 76mm (3") angle iron (at the top of the mechanism) for the tension bar.

Ramp Springs

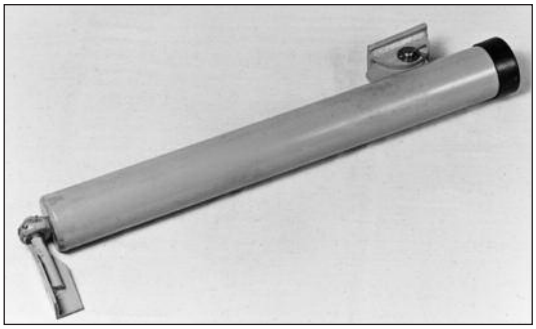

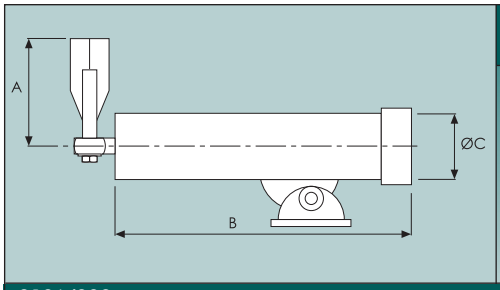

SIDE MOUNTED RAMP SPRING

Capacity 136kg (300lb) per pair, aprox.

2106/002	
	A = 145mm (5.7"), B = 780mm (31"), C = 89mm (3.5")
2106/003	**Replacement Spring**

• FITTING INSTRUCTIONS • FITTING INSTRUCTIONS • FITTING INSTRUCTIONS • FITTING INSTRUCTIONS •

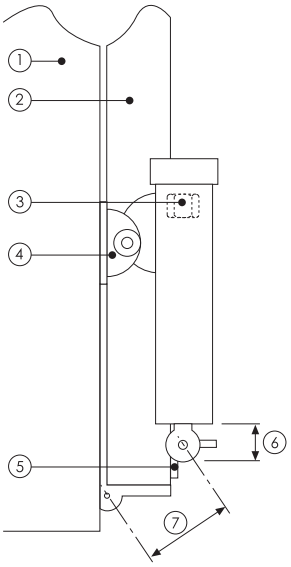

1. *Rear of vehicle.*
2. *Ramp.*
3. *Adjuster nut.*
4. *Top pin pivot assembly.*
5. *Ramp pin bracket.*
6. *70mm (2.75")*
7. *95mm (3.75")*

Clamp ramp pin bracket in position as shown, (5). ***NB. DIMENSIONS VERY IMPORTANT.***

Put ramp in closed position.

Check that end of rod is protruding 70mm (2.75"), as shown (6).

Connect compression spring unit to ramp bracket, hold up against body and mark position for top pin pivot assembly (4).

Fix top pin pivot assembly and ramp pin bracket securely into position with the ramp in the closed position.

*While in this position, screw adjuster nut down (inside main body) to remove all slack. Then tension the spring by 1.5 turns of the adjuster nut. T****HIS IS VERY IMPORTANT!***

Lower ramp with caution.

Should any final adjustment be required, always do so with ramp in ***CLOSED*** *position.*

NB. The above recommended instructions are for ramps approximately 136kg (300lb) in weight. If the ramp is lighter, centres (7) should be approximately 90mm (3.5"), or if heavier approximately 102mm (4").

Ramp Springs

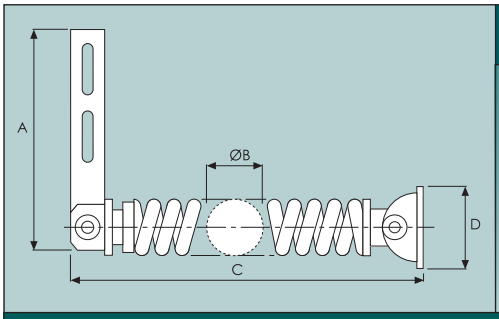

UNDER-FLOOR RAMP SPRING

Capacity approx. 136kg (300lb) per pair.

2106/001 **Weight 14kg/31lb**

A = 317mm (12.5"), B = Ø77mm (3"),
C = 920mm (36"), D = 102mm (4")

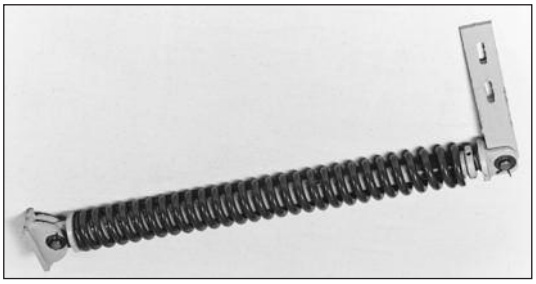

• FITTING INSTRUCTIONS • FITTING INSTRUCTIONS • FITTING INSTRUCTIONS • FITTING INSTRUCTIONS •

Screw adjusting nut hard up to flange.

Clamp flat bar with slotted holes on to back of ramp with the centre of the lower hole 102mm (4") away from the centre of the ramp pivot point, (6).

Mark the centre of both slotted holes on to the ramp frame, drill Ø12.7mm (0.5") holes and fit nuts, bolts and washers. Remove the clamps.

Swing rest of assembly up under the body as high as possible.

IF NECESSARY, lower the end nearest the ramp 12.7mm (0.5") to clear body-work of wagon, using slotted holes.

Fix a short length of 150mm (6") x 75mm (3") x 6mm (0.25") channel between main frame of wagon and fix brackets an end of spring assembly to it, (7).

Now, tension the adjusting nut, (5) approximately 25.4mm (1") and standing at the side of the vehicle, lower the ramp carefully. Should the ramp fall too quickly, continue to tension spring until the ramp falls at required rate.

When more than 76mm (3") of adjustment is required, screw the nut back to the flange, then slacken 12.5mm (0.5") bolts in slots and increase centre of spring and ramp pin (6) by 12.7mm (0.5").
Re-tighten nuts and tension adjusting nut again.

Various combinations of adjustment can be made, according to weight of ramp.

NB. The above recommended instructions are for ramps approximately 136kg(300lb) in weight.

1. *Steel chassis.*
2. *Wooden runners on top of steel chassis.*
3. *Wooden cross-member inside box.*
4. *Ramp pivot point.*
5. *Adjusting nut for spring tension.*
6. *102mm (4").*
7. *This end to be 25.4mm (1") higher if possible.*
   NEVER LOWER!

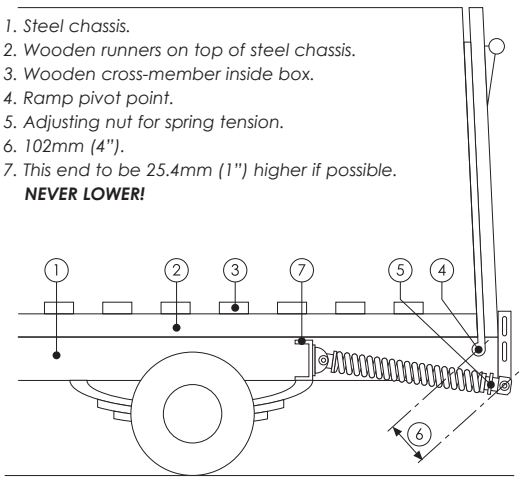

Ramp Springs

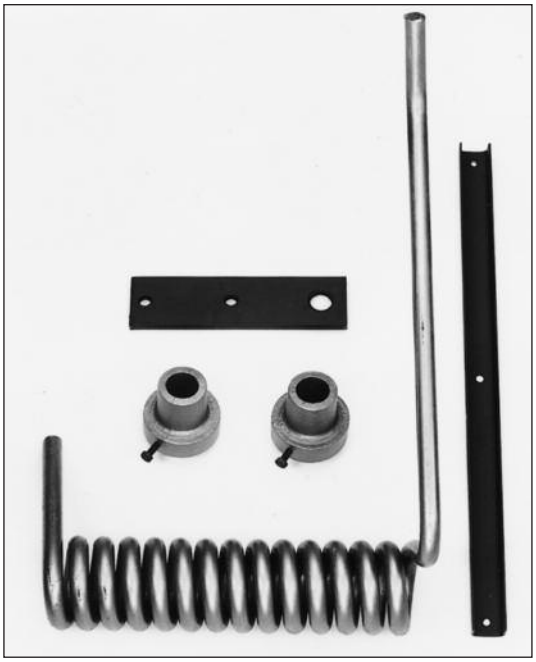

Right hand shown.

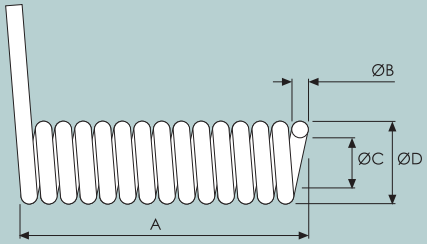

RAMP SPRING

Capacity of 0.75cwts per spring when used with conventional ramps.
Right hand shown.

2096/0001	**Complete ramp assistor, left hand**	
2096/0002	**Complete ramp assistor, right hand (shown)**	
	with short spring. Weight = 7.4kg/16.3lb	
2096/002	**Short spring, left hand**	**Weight 5.1kg/11.3lb**
2096/003	**Short spring, right hand (shown)**	
	A = 305mm (12"), B = Ø16mm (0.63"),	
	C = Ø43mm (1.69"), D = 75mm (2.95")	
2097/002	**Long spring, left hand**	**Weight 8.7kg/19.2lb**
2097/003	**Long spring, right hand**	
	A = 508mm (20"), B = Ø17.5mm (0.69"),	
	C = Ø43mm (1.69"), D = 78mm (3.07")	
2096/004	**Reaction plate**	**Weight 650g/1.4lb**
	Zinc-plated, mild steel with a gold passivated finish.	
2096/005	**Channel guide**	
	Zinc-plated, mild steel with a gold passivated finish. 460mm (18") long	

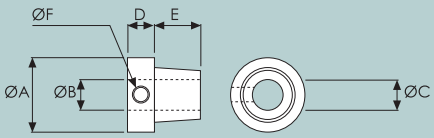

SPACER BUSH

Self-colour, cast iron complete with screw.

		A	B	C	D	E	F	G	H
2096/006	**Bush**					**Weight 650g/1.4lb**			
2096/007	**Screw**								
METRIC	*(mm)*	*62.5*	*26*	*40.5*	*21*	*38.5*	*M6*		
IMPERIAL	*(ins)*	*2.46*	*1.02*	*1.60*	*0.83*	*1.52*			

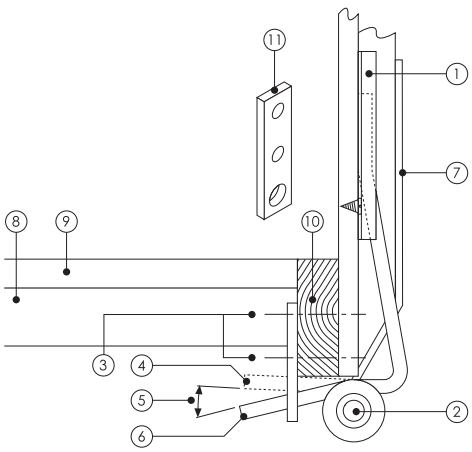

• *FITTING INSTRUCTIONS* • *FITTING INSTRUCTIONS* •

Fit channel guides to ramp, space evenly and use countersunk screws. Insert spacer bushes in both ends of springs and pass ramp hinge bar through, engaging long arm in channel guides. The short arm of the spring, which is now free under rear bearer, should be fitted with reaction plate and lowered down to give a suitable amount of 'pre-set' to spring. Reaction plates should be secured while tension is applied. A length of steel tubing can be used to apply sufficient 'pre-set' (usually 10°) to exert slight pressure on the ramp when closed.

1. *Channel guide screwed to ramp.*
2. *Spacer bush, one each end of springs.*
3. *Reaction plate bolted to rear bearer.*
4. *Before torsion applied.*
5. *10° angle.*
6. *After torsion applied.*
7. *Ramp hinge.*
8. *Floor bearer.*
9. *Floor.*
10. *Rear bearer.*
11. *Reaction plate.*

Trailer Fittings

TOOL BOX HINGE

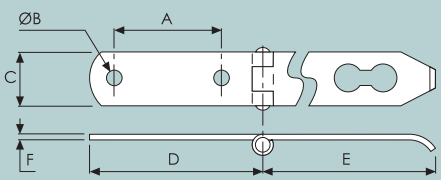

Self colour, mild steel.

	A	B	C	D	E	F	G	H
0892/001					**Weight 160g/5.6oz**			
METRIC (mm)	*70*	*6.5*	*32*	*108*	*108*	*3*		
IMPERIAL (ins)	*2.76*	*0.26*	*1.26*	*4.25*	*4.25*	*0.12*		

TURNBUCKLE ASSEMBLY

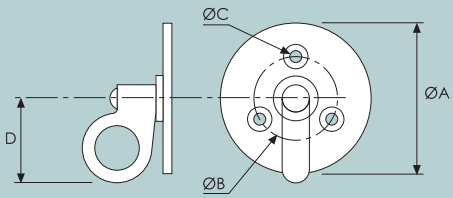

Zinc-plated, mild steel.

	A	B	C	D	E	F	G	H
0892/006					**Weight 50g/1.8oz**			
METRIC (mm)	*45.5*	*32*	*6.6*	*25.4*				
IMPERIAL (ins)	*1.79*	*1.25*	*0.26*	*1.00*				

AGRICULTURAL TRAILER HITCH

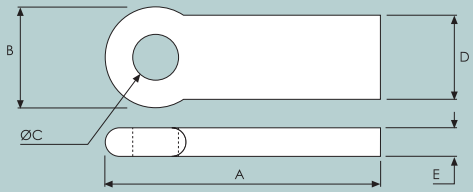

Self-colour, forged steel with a straight shank.
NB: Not designed for road going vehicles.

	A	B	C	D	E	F	G	H
1079/001					**Weight 5.8kg/12.8lb**			
METRIC (mm)	*311*	*110*	*50.8*	*90*	*30*			
IMPERIAL (ins)	*12.2*	*4.3*	*2.00*	*3.54*	*1.18*			

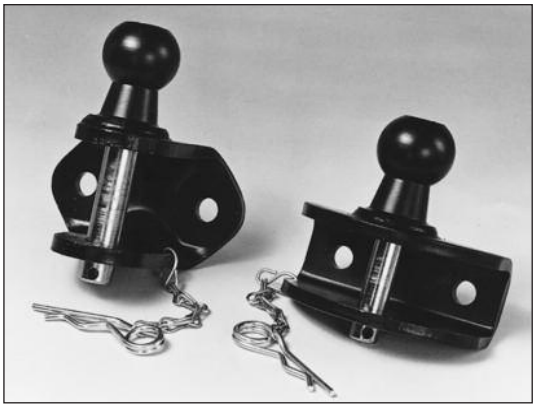

Left - 1074/0071 Right - 1074/007

NB. Not for use on cars or car derived light vans registered on or after 1st August 1998

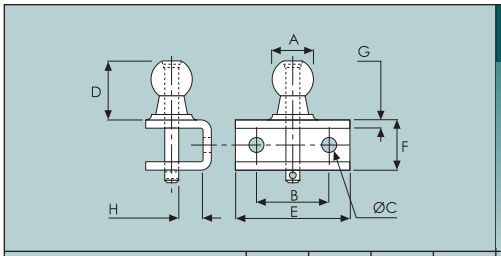

STANDARD TOWING HITCH

Black, phoshpate finish on hitch. Zinc-plated, Integral 'thumb-press', safety lock-pin
Max static load :
3300lb/1500kg on ball
6600lb/3000kg on pin.
NB: not to be used without the integra lock pin in position.

	A	B	C	D	E	F	G	H
1074/007					**Weight 2.6kg/5.7lb**			
METRIC (mm)	50.0	89.0	16.0	75.0	140	65.0	9.00	32.0
IMPERIAL (ins)	1.97	3.50	0.63	2.95	5.50	2.56	0.35	1.26

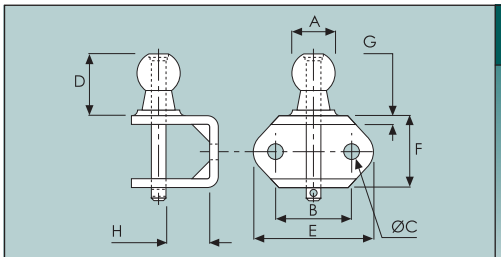

HEAVY DUTY TOWING HITCH

Black, phoshpate finish on hitch. Zinc-plated, Integral 'thumb-press', safety lock-pin
Max static load :
3300lb/1500kg on ball
8800lb/4000kg on pin.
NB: not to be used without the integra lock pin in position.

	A	B	C	D	E	F	G	H
1074/0071					**Weight 2.7kg/6lb**			
METRIC (mm)	50.0	89.0	16.0	75.0	140	87.0	11.0	55.0
IMPERIAL (ins)	1.97	3.50	0.63	2.95	5.50	3.43	0.43	2.17

NB. Not for use on cars or car derived light vans registered on or after 1st August 1998

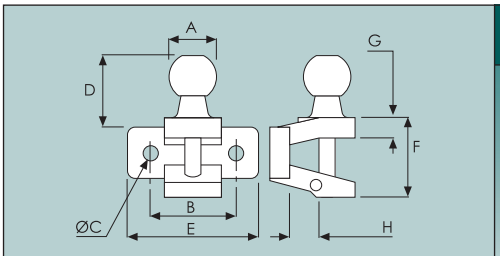

HEAVY DUTY TOWING HITCH

Black phosphate finish on hitch. Zinc-plated, integral thumb- press, safety lock-pin.
Max static load :
7700lb/3500kg on ball
7700lb/3500kg on pin.
NB: not to be used without the integra lock pin in position.

	A	B	C	D	E	F	G	H
1074/0072					**Weight 3kg/6.6lb**			
METRIC (mm)	50.0	90.0	16.0	58.0	138	89.0	21.0	30.0
IMPERIAL (ins)	1.97	3.54	0.63	2.28	5.43	3.50	0.83	1.18

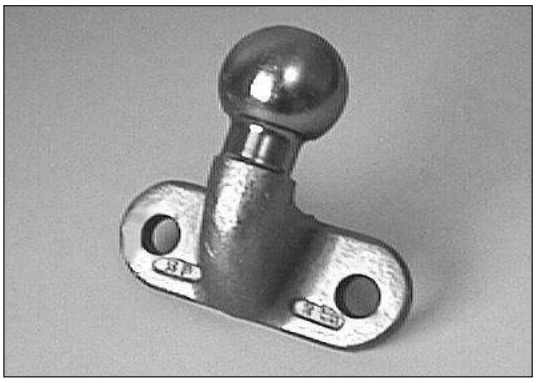

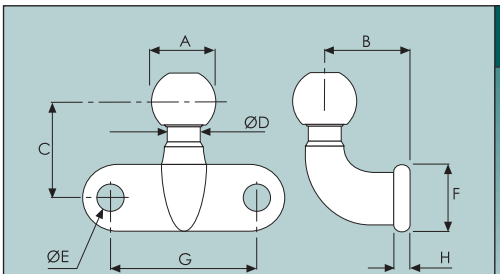

TOWING BALL

Zinc-plated, forged steel with a gold passivated finish.
Suitable for most M1 passenger vehicles. Approved to E.E.C. directive 94/20/E.C.
Max. static nose weight ("S" value) = 75kg/165lb.
Trailer/vehicle weight combination value ("D") = 12kN

	A	B	C	D	E	F	G	H
1074/005					**Weight 1.8kg/4lb**			
METRIC (mm)	50	53	95	28	17	51	90	14.5
IMPERIAL (ins)	1.97	2.09	3.74	1.10	0.67	2.00	3.54	0.57

Skip Fittings

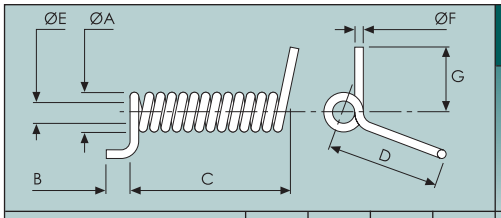

SKIP SPRING

Self-colour, steel.

	A	B	C	D	E	F	G	H
2098/001	**Left hand (shown)**				**Weight 2.1kg/4.6lb**			
2098/002	**Right hand**							
METRIC (mm)	*54*	*90*	*260*	*155*	*32*	*11*	*115*	
IMPERIAL (ins)	*2.10*	*3.50*	*10.2*	*6.10*	*1.30*	*0.43*	*4.53*	

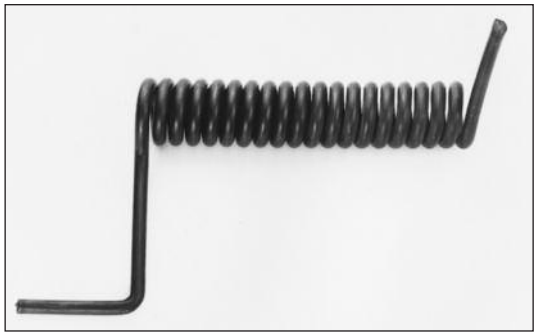

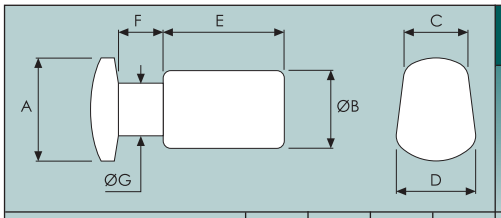

LIFTING LUGS

Self-colour, forged steel.

	A	B	C	D	E	F	G	H
1067/001					**Weight 1.4kg/3.1lb**			
METRIC (mm)	*70*	*50*	*40*	*57*	*50*	*30*	*38*	
IMPERIAL (ins)	*2.80*	*2.00*	*1.58*	*2.24*	*2.00*	*1.18*	*1.50*	

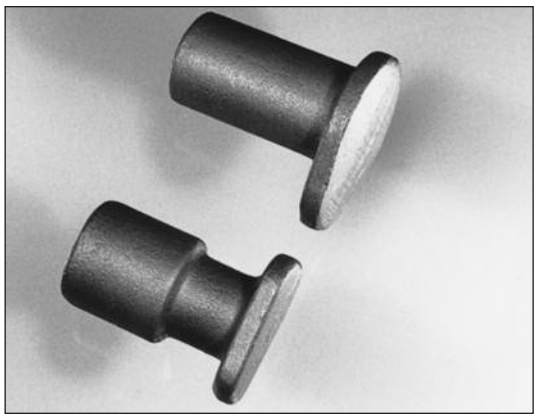

Top - 1068/002 *Bottom - 1067/001*

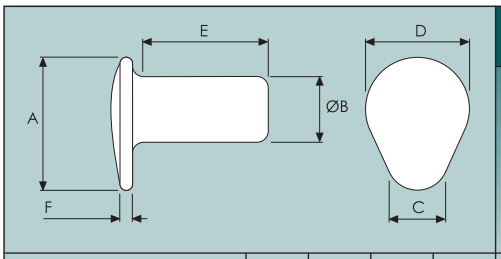

LIFTING LUGS

Self-colour, forged steel.

	A	B	C	D	E	F	G	H
1068/001					**Weight 1.6kg/3.5lb**			
METRIC (mm)	*89*	*47*	*40*	*70*	*80*	*8*		
IMPERIAL (ins)	*3.50*	*1.85*	*1.60*	*2.80*	*3.15*	*0.32*		
1068/002					**Weight 1kg/2.2lb**			
METRIC (mm)	*70*	*37*	*38*	*50*	*90*	*11*		
IMPERIAL (ins)	*2.80*	*1.40*	*1.50*	*2.00*	*3.50*	*0.40*		

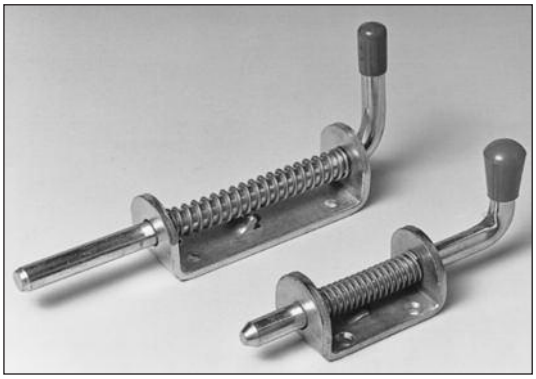

Left: 0841/001 Right: 0840/001

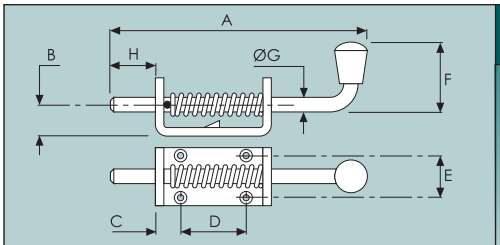

SPRING BOLT

Base retaining.

	A	B	C	D	E	F	G	H
0839/001	**Zinc plated**				**Weight 210g/7.4oz**			
METRIC (mm)	*144*	*12*	*13*	*46*	*24*	*48*	*10*	*44*
IMPERIAL (ins)	*5.67*	*0.47*	*0.51*	*1.81*	*0.95*	*1.90*	*0.39*	*1.73*
35 mm stroke - 4 x Ø6.7 thru fixing holes								
0839/002	**304 Stainless steel**				**Weight 200g/7.1oz**			
METRIC (mm)	*145*	*12*	*12*	*46*	*24*	*49*	*10*	*42*
IMPERIAL (ins)	*5.71*	*0.47*	*0.47*	*1.81*	*0.95*	*1.93*	*0.39*	*1.65*
40 mm stroke - 4 x Ø6.7 thru fixing holes								
0840/001	**Zinc plated**				**Weight 360g/12.7oz**			
0843/001	**304 Stainless steel**							
METRIC (mm)	*165*	*17*	*16*	*41*	*28*	*46.3*	*12.5*	*30*
IMPERIAL (ins)	*6.5*	*0.67*	*0.63*	*1.61*	*1.10*	*1.82*	*0.50*	*1.18*
27 mm stroke - 4 x Ø6 c'sunk fixing holes								
0840/002	**Zinc plated**				**Weight 920g/2lb**			
0842/001	**Self colour**				**Weight 920g/2lb**			
METRIC (mm)	*265*	*28*	*23*	*94*	*29*	*145*	*16*	*80*
IMPERIAL (ins)	*10.4*	*1.10*	*0.91*	*3.70*	*1.14*	*5.71*	*0.63*	*3.15*
60 mm stroke - 4 x Ø6 c'sunk fixing holes								
0841/001	**Zinc plated**				**Weight 550g/1.2lb**			
METRIC (mm)	*218*	*22*	*18*	*84*	*21*	*82.8*	*12.5*	*70*
IMPERIAL (ins)	*8.58*	*0.87*	*0.71*	*3.31*	*0.83*	*3.26*	*0.50*	*2.76*
46 mm stroke - 4 x Ø6.7 thru fixing holes								
0839/100	**316 Stainless Steel**				**Weight 126g/4.4oz**			
METRIC (mm)	*124*	*11*	*14*	*30*	*21*	*47*	*10*	*40*
IMPERIAL (ins)	*4.88*	*0.43*	*0.55*	*1.18*	*0.83*	*1.85*	*0.39*	*1.58*
29 mm stroke - 4 x Ø5 thru fixing holes								

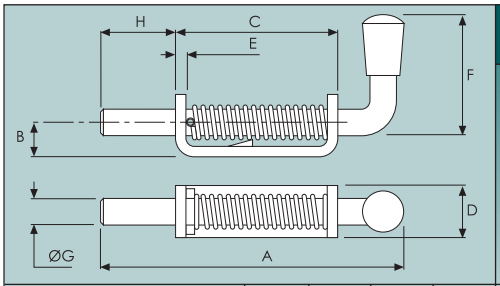

SPRING BOLT

Base retaining with narrow base to weld-on.
Zinc-plated bolt with a self-colour bracket.

	A	B	C	D	E	F	G	H
0836/001					**Weight 280g/9.9oz**			
METRIC (mm)	*142*	*16*	*76*	*25*	*5*	*56*	*12.7*	*36*
IMPERIAL (ins)	*5.59*	*0.63*	*2.99*	*0.98*	*0.20*	*2.21*	*0.50*	*1.42*
33 mm stroke								

Spring Bolts

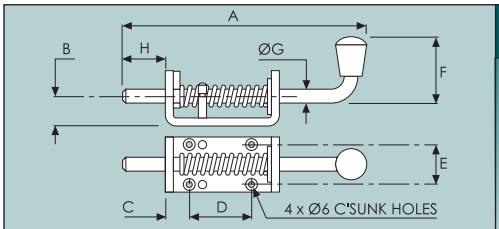

SPRING BOLT

Peg retaining.
27 mm stroke.

		A	B	C	D	E	F	G	H
0837/001		**Zinc plated**				**Weight 380g/13.4oz**			
METRIC	*(mm)*	*160*	*20*	*17.5*	*40*	*28*	*50*	*12*	*30*
IMPERIAL	*(ins)*	*6.30*	*0.79*	*0.70*	*1.58*	*1.10*	*1.97*	*0.47*	*1.18*
0837/020		**304 Stainless Steel**				**Weight 380g/13.4oz**			
METRIC	*(mm)*	*165*	*17*	*16*	*41*	*28*	*46*	*12.5*	*30*
IMPERIAL	*(ins)*	*6.50*	*0.67*	*0.63*	*1.61*	*1.10*	*1.81*	*0.49*	*1.18*

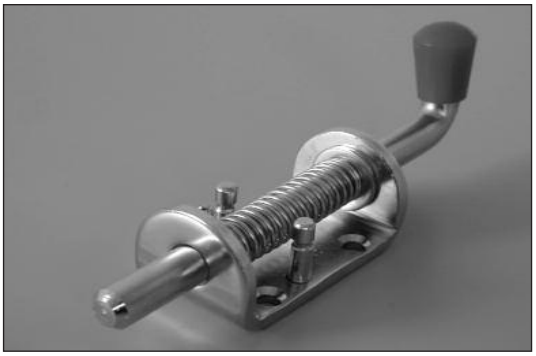

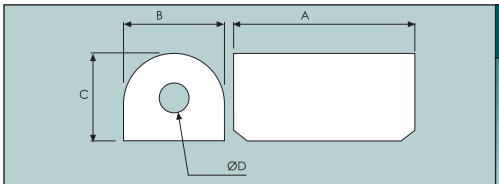

SPRING BOLT COVER

Plasticised PVC, which is UV stable. 75° shore hardness. Compatible with spring bolts 0837/001 -zinc plated & 0837/020 - stainless steel.

		A	B	C	D	E	F	G	H
0837/010		**Black**				**Weight 20g/0.8oz**			
0837/011		**Red**							
METRIC	*(mm)*	*79*	*44*	*37*	*13*				
IMPERIAL	*(ins)*	*3.11*	*1.73*	*1.46*	*0.51*				

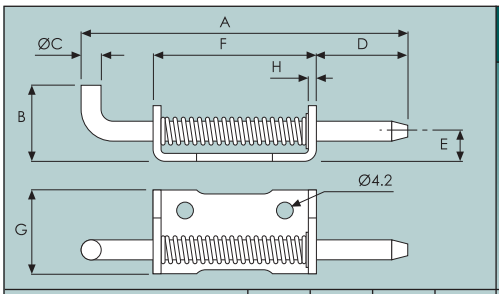

SPRING BOLT

12mm stroke.
Right hand shown.

		A	B	C	D	E	F	G	H
0486/3860		**Zinc plated (RH)**				**Weight 40g/1.4oz**			
0486/3861		**Zinc plated (LH)**							
0486/3862		**304 Stainless steel (RH)**							
0486/3863		**304 Stainless steel (LH)**							
METRIC	*(mm)*	*82.0*	*20.0*	*5.00*	*23.0*	*8.00*	*41.0*	*21.0*	*2.00*
IMPERIAL	*(ins)*	*3.23*	*0.79*	*0.20*	*0.91*	*0.32*	*1.61*	*0.83*	*0.08*

Left: 0486/3863 (left hand) Right: 0486/3862 (right hand)

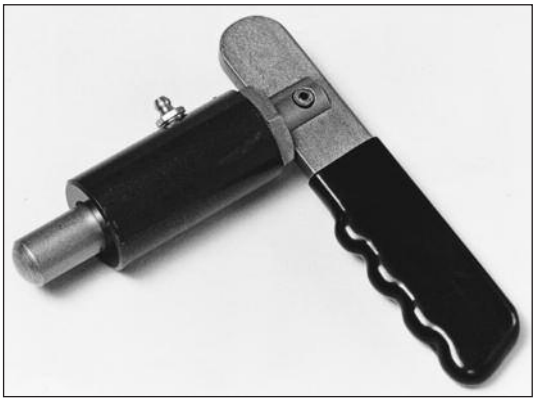

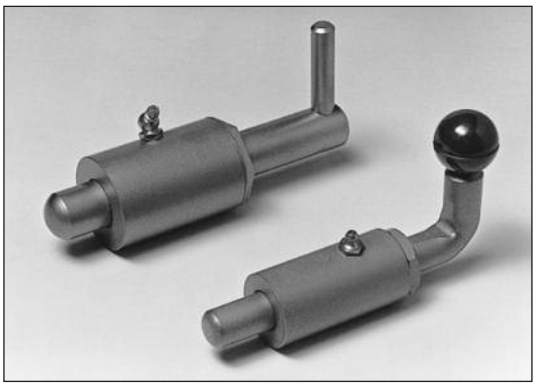

Top: 0838/004 Bottom: 0838/002

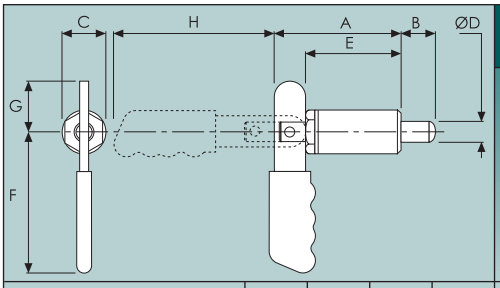

HEAVY DUTY SPRING BOLT

With cam action handle.
Self-colour steel body & bolt with a zinc plated handle.
25 mm stroke.

	A	B	C	D	E	F	G	H
0838/0021					**Weight 960g/2.1lb**			
METRIC (mm)	110	31	38	19	80	130	44	138
IMPERIAL (ins)	4.33	1.22	1.50	0.75	3.15	5.11	1.73	5.43

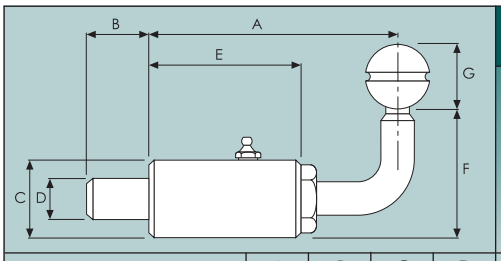

HEAVY DUTY SPRING BOLTS

Self-colour steel to weld on.

	A	B	C	D	E	F	G	H
0838/002					**Weight 540g/1.2lb**			
METRIC (mm)	116	30	38	19	73.5	62.5	32	
IMPERIAL (ins)	4.57	1.18	1.50	0.75	2.89	2.46	1.26	
27 mm stroke								
0838/004					**Weight 1.4kg/3.1lb**			
METRIC (mm)	137	30	50.8	25.4	73	90		
IMPERIAL (ins)	5.39	1.18	2.00	1.00	2.87	3.54		
30 mm stroke								

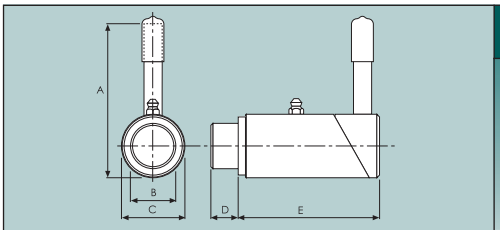

'ROTALOCK' SPRING BOLTS

Zinc plated steel with integral grease nipple.
To weld on.

	A	B	C	D	E	F	G	H
0834/010					**Weight 220g/7.8oz**			
METRIC (mm)	57	19	30	13	63			
IMPERIAL (ins)	2.24	0.75	1.18	0.51	2.48			
0834/020					**Weight 600g/1.3lb**			
METRIC (mm)	85	25.4	35	14	79			
IMPERIAL (ins)	3.35	1.00	1.38	0.55	3.11			

Spring Bolts

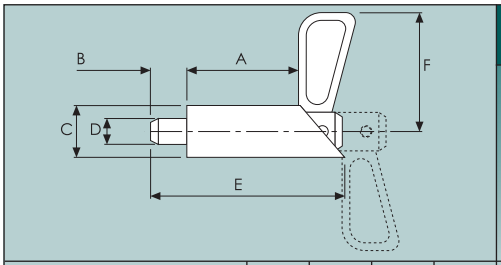

SHOOT BOLT

Twist lever operation.
Self-colour, steel body with a zinc plated lever.

	A	B	C	D	E	F	G	H
0838/001					**Weight 140g/5oz**			
METRIC (mm)	*41*	*14*	*20*	*10*	*70*	*45*		
IMPERIAL (ins)	*1.61*	*0.55*	*0.79*	*0.39*	*2.76*	*1.77*		

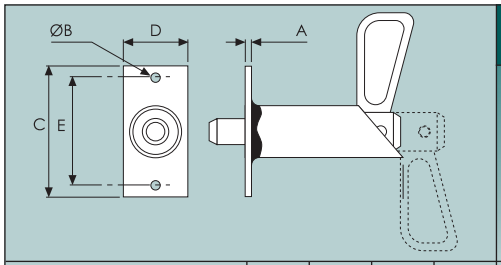

SHOOT BOLT WITH FRONT PLATE

Twist lever operation.
Zinc-plated body & handle.
See 0838/001 for further dimensions.

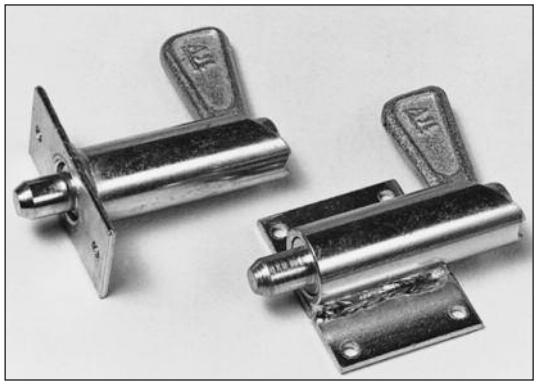

Top: 0838/0011 *Bottom: 0838/0012*

	A	B	C	D	E	F	G	H
0838/0011					**Weight 150g/5.3oz**			
METRIC (mm)	*2*	*4*	*50*	*25*	*40*			
IMPERIAL (ins)	*0.08*	*0.16*	*1.97*	*0.98*	*1.60*			

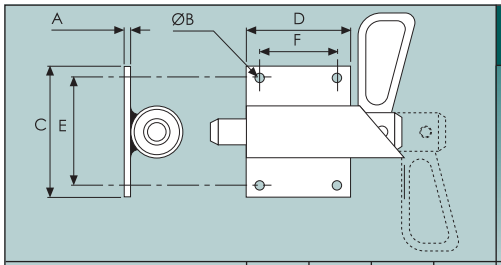

SHOOT BOLT WITH SIDE PLATE

Twist lever operation.
Zinc-plated body & handle.
See 0838/001 for further dimensions.

	A	B	C	D	E	F	G	H
0838/0012	**Left hand (shown)**				**Weight 180g/6.4oz**			
0838/0013	**Right hand**							
METRIC (mm)	*2*	*4*	*50*	*40*	*40*	*30*		
IMPERIAL (ins)	*0.08*	*0.16*	*1.97*	*1.60*	*1.60*	*1.18*		

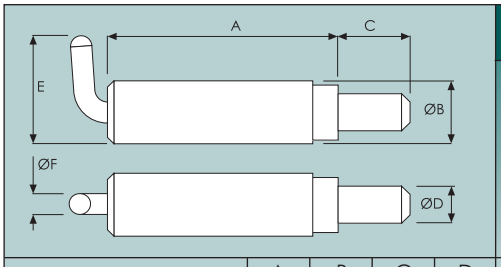

WELD ON SPRING BOLT

Self colour, mild steel casing with yellow passivated bolt.
15mm stroke.

	A	B	C	D	E	F	G	H
0832/1030					**Weight 80g/2.8oz**			
METRIC (mm)	*53.0*	*15.0*	*15.0*	*9.00*	*26.0*	*5.00*		
IMPERIAL (ins)	*2.09*	*0.59*	*0.59*	*0.35*	*1.02*	*0.20*		

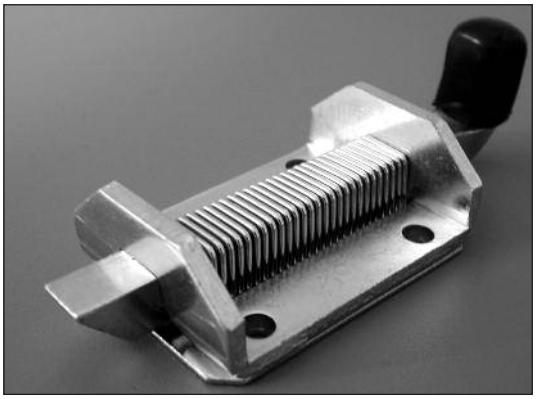

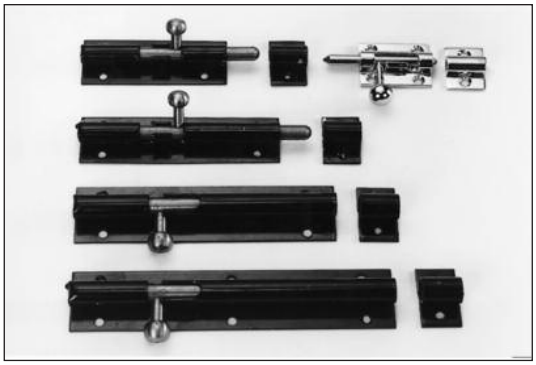

Left, top to bottom: *0853/001*
0853/002
0853/003
0853/004

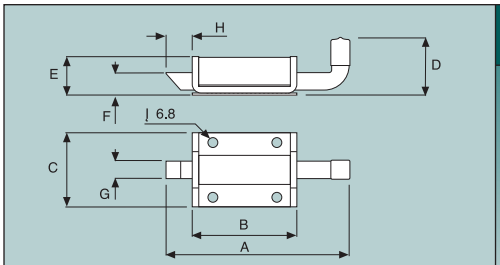

SPRING BOLT

Mild steel assembly with a zinc plate finish.
Slam action.
No hold-back facility.

		A	B	C	D	E	F	G	H
0833/001						**Weight 362g/12.8oz**			
METRIC	*(mm)*	*128*	*73*	*51*	*40*	*27*	*15*	*12*	*17*
IMPERIAL	*(ins)*	*5.04*	*2.87*	*22.00*	*1.58*	*1.06*	*0.59*	*0.47*	*0.67*

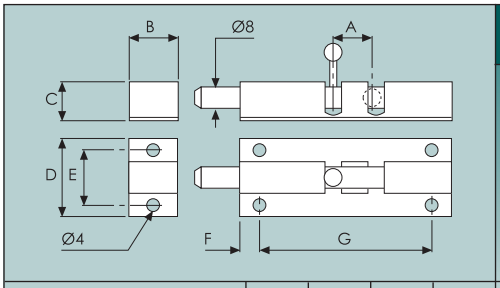

LIGHT DUTY SPRING BOLTS

Spring loaded action.
Pressed steel casing with a solid steel bolt.

		A	B	C	D	E	F	G	H
0853/001		**3", black enamelled**				**Weight 80g/2.8oz**			
0853/011		**3", zinc plated**							
METRIC	*(mm)*	*16*	*19*	*15*	*29*	*19*	*11.5*	*54*	
IMPERIAL	*(ins)*	*0.63*	*0.75*	*0.60*	*1.14*	*0.75*	*0.45*	*2.13*	
0853/002		**4", black enamelled**				**Weight 110g/3.9oz**			
METRIC	*(mm)*	*16*	*19*	*15*	*29*	*19*	*11.5*	*80*	
IMPERIAL	*(ins)*	*0.63*	*0.75*	*0.60*	*1.14*	*0.75*	*0.45*	*3.15*	

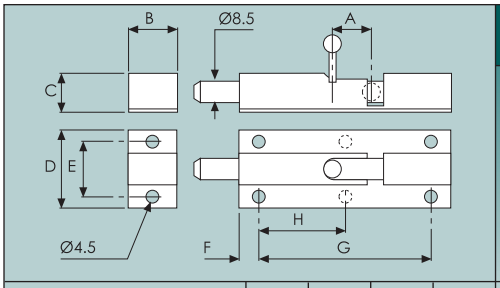

LIGHT DUTY SPRING BOLTS

Spring loaded action.
Pressed steel casing with a solid steel bolt.

		A	B	C	D	E	F	G	H
0853/003		**5", black enamelled**				**Weight 160g/5.7oz**			
METRIC	*(mm)*	*15*	*19*	*16*	*32*	*21*	*13.5*	*102*	
IMPERIAL	*(ins)*	*0.60*	*0.75*	*0.63*	*1.26*	*0.83*	*0.53*	*4.02*	
0853/004		**6", black enamelled**				**Weight 190g/6.7oz**			
METRIC	*(mm)*	*15*	*19*	*16*	*32*	*21*	*13.5*	*128*	*66*
IMPERIAL	*(ins)*	*0.60*	*0.75*	*0.63*	*1.26*	*0.83*	*0.53*	*5.04*	*2.60*

Metal Profiles

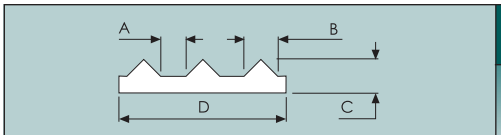

TREAD-PLATE

Self-colour, mild steel.

	A	B	C	D	E	F	G	H
2927/004	**3m (9'8") lengths**				**Weight 2.4kg/5.2lb**			
METRIC (mm)	*5*	*6*	*5*	*32*				
IMPERIAL (ins)	*0.20*	*0.24*	*0.20*	*1.30*				

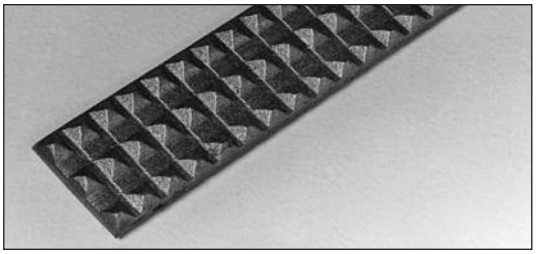

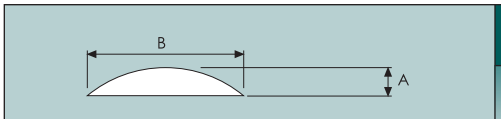

HALF-ROUND SECTION

Self-colour aluminium.

	A	B	C	D	E	F	G	H
2813/001	**5m (16'5") lengths**				**Weight 612g/1.4lb**			
METRIC (mm)	*4.7*	*25.4*						
IMPERIAL (ins)	*0.19*	*1.00*						

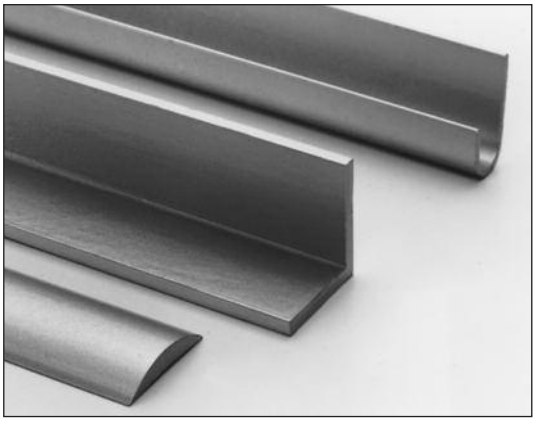

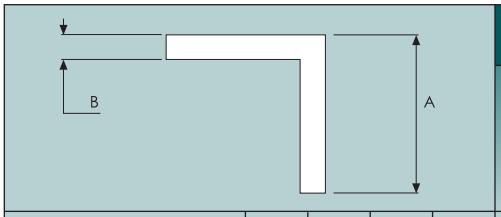

ANGLE SECTION

Self-colour aluminium.

	A	B	C	D	E	F	G	H
2869/001	**5m (16'5") lengths**				**Weight 1.6kg/3.5lb**			
METRIC (mm)	*26*	*4*						
IMPERIAL (ins)	*1.02*	*0.16*						

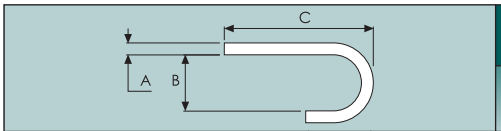

'J' SECTION

Self-colour aluminium.

	A	B	C	D	E	F	G	H
2880/001	**5m (16'5") lengths**				**Weight 1kg/2.2lb**			
METRIC (mm)	*2*	*9*	*25.4*					
IMPERIAL (ins)	*0.08*	*0.35*	*1.00*					

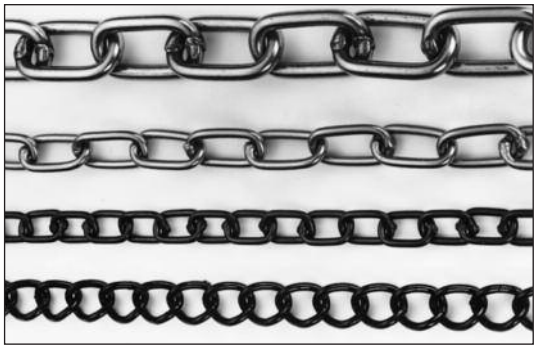

SIZE				WEIGHT	LOAD	PART NUMBERS			
METRIC		IMPERIAL				0896/...	0897/...	0898/...	0899/...
WIRE Ø (mm)	INSIDE LENGTH (mm)	WIRE Ø (SWG)	LINKS PER FOOT	PER 10 METRES (kg)	MAX. REC.LOAD (kg)	SELF COLOUR	BLACK JAPANNED	HOT DIP GALVANISED	BRIGHT ZINC PLATED
STRAIGHT LINKS									
2.5	14	12	24	1.2	37	12514*	12514*	12514*	12514
2.5	19	12	18	1.1	37	12519*	12519*	12519*	12519*
3	16	10	20	1.8	56	1316*	1316	1316*	1316
3	21	10	16	1.6	56	1321*	1321	1321*	1321
3	26	10	12	1.5	56	1326*	1326*	1326*	1326*
4	19	8	18	3.2	100	1419*	1419*	1419*	1419*
4	26	8	13	2.8	100	1426	1426*	1426*	1426
5	21	6	16	5.1	157	1521*	1521*	1521*	1521*
5	28	6	12	4.6	157	1528	1528*	1528*	1528
6	24	4	12	7.6	225	1624*	1624*	1624*	1624
6	33	4	10	6.7	225	1633*	1633*	1633*	1633*
6	42	4	8	6.2	225	1642*	1642*	1642*	1642*
6.5	36	3	8	7.8	265	16536	16536*	16536*	16536
7	38	2	8	9.1	300	1738*	1738*	1738*	1738*
8	42	5/16"	7.5	12.1	400	1842	1842*	1842*	1842
TWISTED LINKS									
2.5	14	12	24	1.2	37	22514*	22514*	22514*	22514*
3	16	10	20	1.8	56	2316*	2316*	2316*	2316*
4	19	8	18	3.2	100	2419*	2419*	2419*	2419*
5	21	6	16	5.1	157	2521*	2521*	2521*	2521*
OVAL LINKS									
2.5	17	12	20	1.1	37	32517*	32517*	32517*	32517*
3	21	10	16	1.6	56	3321*	3321*	3321*	3321*

** Non stock items subject ot lead time & minimum order quantities - please call for details.*
Other types & sizes available on request

Chains & Accessories

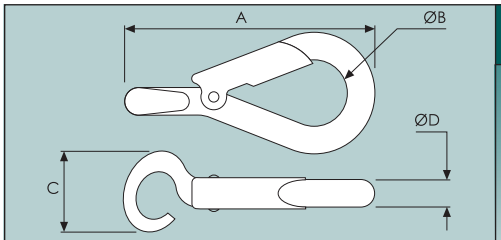

SPRING HOOKS

	A	B	C	D	E	F	G	H
2614/014	**Zinc plated**				**Weight 23g/0.8oz**			
2614/0141	**Electro-black**				**Weight 23g/0.8oz**			
METRIC (mm)	*65*	*13*	*18*	*6*				
IMPERIAL (ins)	*2.56*	*0.51*	*0.71*	*0.24*				
2614/001	**Electro-black**				**Weight 40g/1.4oz**			
2614/004	**Zinc-plated**				**Weight 40g/1.4oz**			
METRIC (mm)	*68*	*17*	*22*	*7*				
IMPERIAL (ins)	*2.80*	*0.67*	*0.87*	*0.28*				
2614/002	**Electro-black**				**Weight 60g/2.1oz**			
2614/005	**Zinc plated**				**Weight 60g/2.1oz**			
2614/006	**Zinc plated**				**Weight 90g/3.2oz**			
METRIC (mm)	*77*	*21*	*25*	*8*				
IMPERIAL (ins)	*3.03*	*0.83*	*1.00*	*0.32*				
2614/006 complete with 203mm (8") chain.								
2614/003	**Electro-black**				**Weight 90g/3.2oz**			
METRIC (mm)	*91*	*23*	*30*	*9.5*				
IMPERIAL (ins)	*3.60*	*0.91*	*1.18*	*0.37*				
2614/019	**Zinc plated**				**Weight 99g/3.5oz**			
METRIC (mm)	*100*	*24*	*30*	*10*				
IMPERIAL (ins)	*3.94*	*0.95*	*1.18*	*0.39*				
2614/007	**Zinc plated**				**Weight 180g/6.4oz**			
METRIC (mm)	*105*	*28*	*30*	*10*				
IMPERIAL (ins)	*4.13*	*1.10*	*1.18*	*0.39*				
Complete with 305mm (12") chain.								
2614/017	**Zinc plate**				**Weight 129oz/4.6oz**			
2614/018	**Electro-black**				**Weight 129oz/4.6oz**			
METRIC (mm)	*105*	*29*	*34*	*10*				
IMPERIAL (ins)	*4.13*	*1.14*	*1.34*	*0.39*				

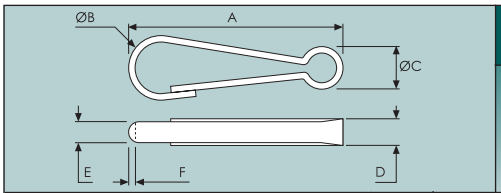

LIGHTWEIGHT SPRING HOOK

Single length of zinc-plated, mild steel.

	A	B	C	D	E	F	G	H
2660/001					**Weight 20g/0.7oz**			
METRIC (mm)	*51*	*11*	*11*	*6*	*4*	*2*		
IMPERIAL (ins)	*2.00*	*0.43*	*0.43*	*0.24*	*0.16*	*0.08*		
Complete with 152mm (6") chain.								

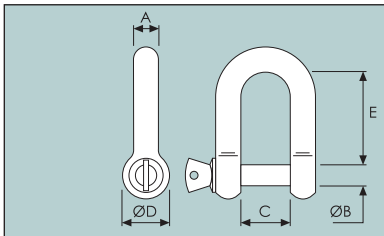

'D' SHACKLES

Galvanised steel.
Other sizes available on request.

	A	B	C	D	E	F	G	H
0111/004					**Weight 110g/3.8oz**			
METRIC (mm)	*9.5*	*9.5*	*20*	*20*	*38*			
IMPERIAL (ins)	*0.38*	*0.38*	*0.79*	*0.79*	*1.50*			
0111/006					**Weight 220g/7.8oz**			
METRIC (mm)	*12.7*	*12.7*	*24*	*26*	*51*			
IMPERIAL (ins)	*0.50*	*0.50*	*0.95*	*1.02*	*2.00*			
0111/008					**Weight 590g/1.3lb**			
METRIC (mm)	*16*	*19.1*	*32*	*38*	*65*			
IMPERIAL (ins)	*0.63*	*0.75*	*1.30*	*1.50*	*2.60*			
0111/009					**Weight 1.04kg/2.3lb**			
METRIC (mm)	*19.1*	*22.2*	*38*	*44*	*74*			
IMPERIAL (ins)	*0.75*	*0.87*	*1.50*	*1.73*	*2.91*			

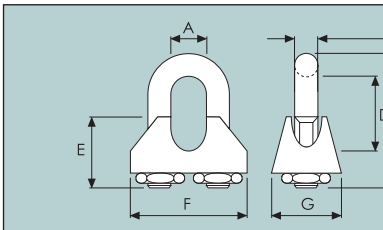

WIRE ROPE GRIPS

Zinc-plated, steel.
Other sizes available on request.

	A	B	C	D	E	F	G	H
2035/001					**Weight 10g/0.4oz**			
METRIC (mm)	*5*	*4*	*24*	*12*	*10*	*23*	*11*	
IMPERIAL (ins)	*0.20*	*0.16*	*0.95*	*0.47*	*0.40*	*0.91*	*0.43*	
2035/002					**Weight 20g/0.8oz**			
METRIC (mm)	*6.5*	*4*	*27*	*15*	*11*	*26*	*13*	
IMPERIAL (ins)	*0.26*	*0.16*	*1.06*	*0.60*	*0.43*	*1.02*	*0.51*	
2035/003					**Weight 40g/1.4oz**			
METRIC (mm)	*8*	*5.5*	*33*	*18*	*14*	*31*	*14*	
IMPERIAL (ins)	*0.32*	*0.22*	*1.30*	*0.71*	*0.55*	*1.22*	*0.55*	

Body Mounting Brackets

Scania

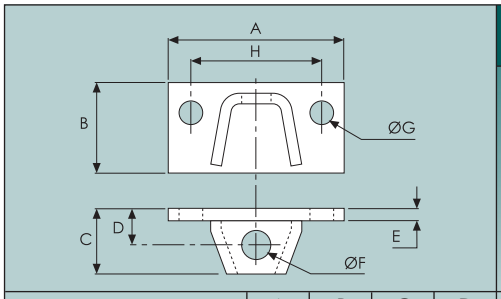

UPPER MOUNTING BRACKET

Fabricated steel with a black finish.
For flexible fixing on Scania chassis'.

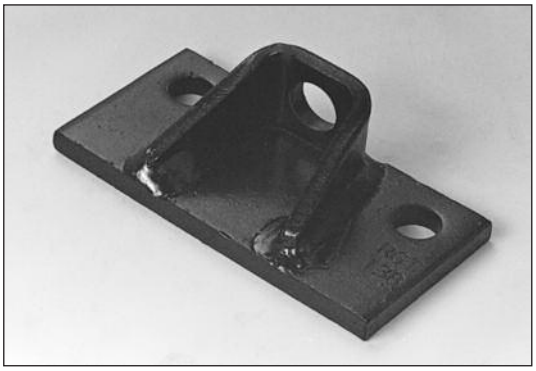

	A	B	C	D	E	F	G	H
6033/138					**Weight 560g/1.2lb**			
METRIC (mm)	*120*	*60*	*40*	*24*	*8*	*17*	*14.3*	*88*
IMPERIAL (ins)	*4.72*	*2.36*	*1.58*	*0.98*	*0.32*	*0.67*	*0.56*	*3.47*

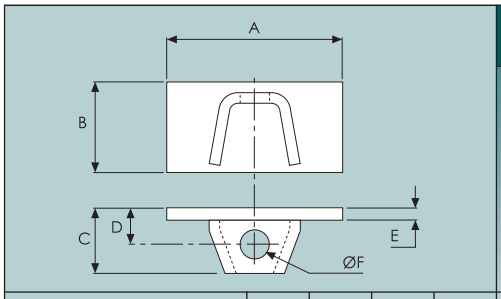

UPPER MOUNTING BRACKET

Pressed steel with a black finish.
To suit weld-on flexible fixing on Scania chassis'.

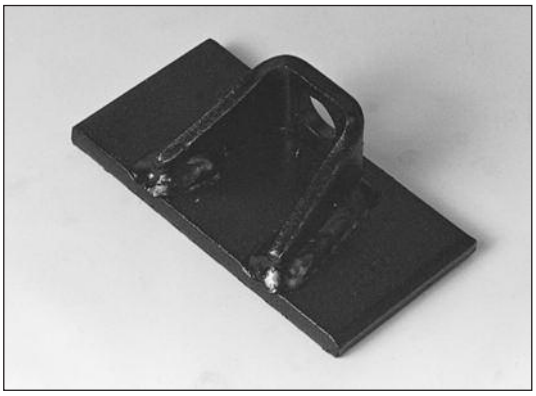

	A	B	C	D	E	F	G	H
6033/141					**Weight 580g/1.3lb**			
METRIC (mm)	*120*	*60*	*40*	*24*	*8*	*17*		
IMPERIAL (ins)	*4.72*	*2.36*	*1.58*	*0.95*	*0.32*	*0.67*		

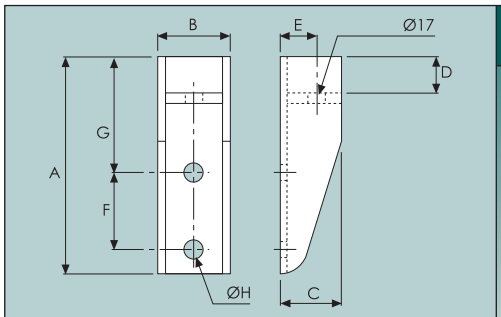

LOWER MOUNTING BRACKET

Fabricated steel with a black finish.
For flexible fixing on Scania chassis'.

	A	B	C	D	E	F	G	H
6033/1375					**Weight 830g/1.8lb**			
METRIC (mm)	*170*	*50*	*45*	*30*	*24*	*50*	*90*	*14.3*
IMPERIAL (ins)	*6.69*	*1.97*	*1.77*	*1.18*	*0.95*	*1.97*	*3.54*	*0.56*

Scania

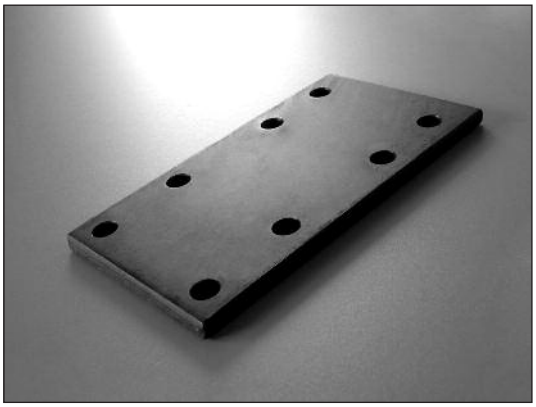

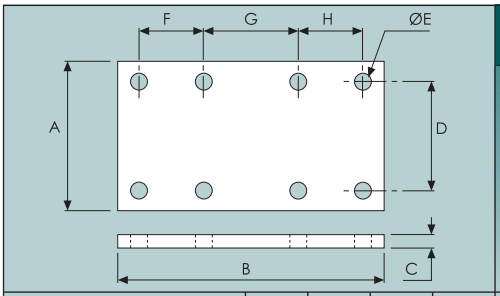

CHASSIS PLATE

Steel with a black finish. For bolt-on runner on Scania series 4.

	A	B	C	D	E	F	G	H
6033/1395					**Weight 3.1kg/6.8lb**			
METRIC (mm)	*140*	*245*	*12*	*100*	*14.3*	*50*	*85*	*60*
IMPERIAL (ins)	*5.51*	*9.65*	*0.47*	*3.94*	*0.56*	*1.97*	*3.35*	*2.36*

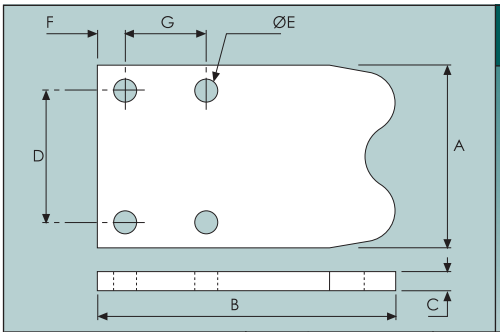

CHASSIS PLATE

Steel with a black finish. To suit weld-on runner on Scania series 4.

	A	B	C	D	E	F	G	H
6033/1405					**Weight 2.6kg/5.7lb**			
METRIC (mm)	*140*	*220*	*12*	*100*	*14.3*	*20*	*50*	
IMPERIAL (ins)	*5.51*	*8.66*	*0.47*	*3.94*	*0.56*	*0.79*	*1.97*	

Body Mounting Brackets

Volvo

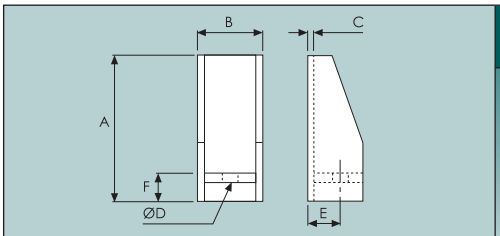

UPPER MOUNTING BRACKET

Fabricated steel with a black finish.
For use with rigid type bodies with steel sub-fames.
Models FL4, FL6, FL7 & FL10.

	A	B	C	D	E	F	G	H
6033/126A					**Weight 650g/1.4lb**			
METRIC (mm)	*125*	*54*	*5*	*18.5*	*27.5*	*20*		
IMPERIAL (ins)	*4.92*	*2.13*	*0.20*	*0.73*	*1.08*	*0.79*		

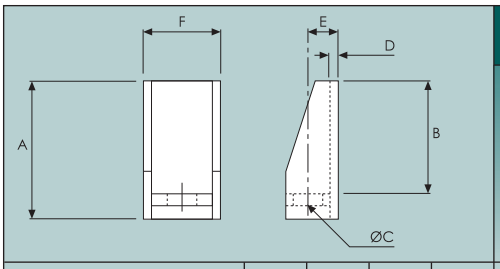

UPPER MOUNTING BRACKET

Fabricated steel with a black finish.
For use with flexible bodies with aluminium subframes.
Models FL4, FL6, FL7 and FL10.

	A	B	C	D	E	F	G	H
6033/126F					**Weight 880g/1.9lb**			
METRIC (mm)	*125*	*105*	*18.5*	*5*	*27.5*	*82*		
IMPERIAL (ins)	*4.92*	*4.13*	*0.73*	*0.2*	*1.08*	*3.23*		

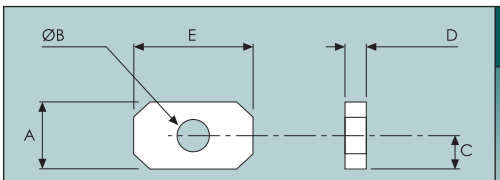

WASHER

Mild-steel with a black finish.
For use with 6033/126F bracket & 6033/126J (734) rubber pad.

	A	B	C	D	E	F	G	H
6033/733					**Weight 120g/4.2oz**			
6033/126I					**Weight 130g/4.6oz**			
METRIC (mm)	*36*	*18*	*15*	*8*	*63*			
IMPERIAL (ins)	*1.42*	*0.71*	*0.59*	*0.32*	*2.48*			

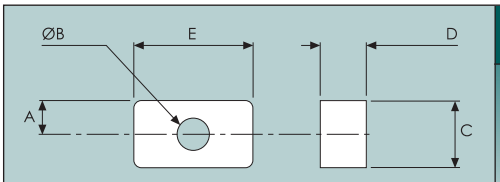

RUBBER PAD

For use with 6033/126F bracket & 6033/126I (733) washer.

	A	B	C	D	E	F	G	H
6033/734					**Weight 80g/2.8oz**			
6033/126J					**Weight 80g/2.8oz**			
METRIC (mm)	*15*	*17.5*	*36*	*30*	*63*			
IMPERIAL (ins)	*0.59*	*0.69*	*1.42*	*1.18*	*2.48*			

Volvo

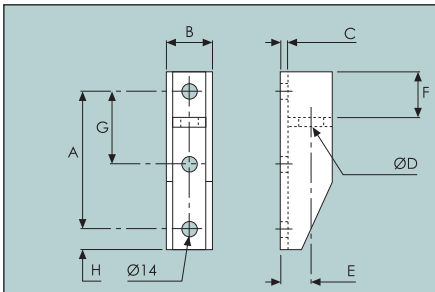

LOWER MOUNTING BRACKET

Fabricated steel with a black finish.
For use with all body types, models FL616, FL7 & FL10.

	A	B	C	D	E	F	G	H
6033/729	**3 fixing holes**				**Weight 930g/2.1lb**			
METRIC (mm)	*155*	*50.0*	*5.00*	*18.5*	*27.5*	*52.0*	*96.0*	*19.0*
IMPERIAL (ins)	*6.10*	*1.97*	*0.20*	*0.73*	*1.08*	*2.10*	*3.78*	*0.75*

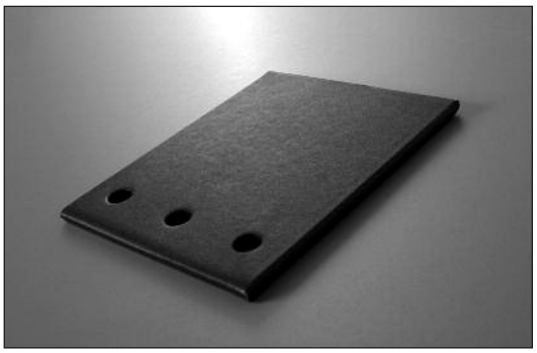

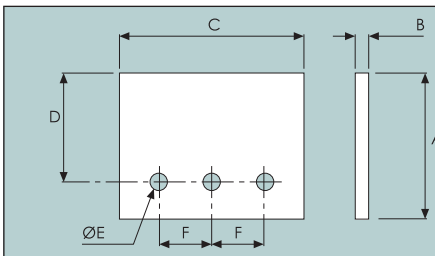

ATTACHMENT PLATE

Mild-steel with a black finish.
For use on all body types with steel subframes.
Models FL4 and FL6.

	A	B	C	D	E	F	G	H
6033/735					**Weight 1.6kg/3.5lb**			
METRIC (mm)	*184*	*8.00*	*150*	*156*	*14.2*	*50.0*		
IMPERIAL (ins)	*7.24*	*0.32*	*5.91*	*6.14*	*0.56*	*1.97*		

Body Mounting Brackets

Mercedes

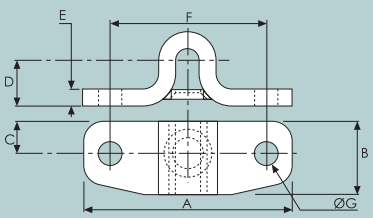

MERCEDES ATEGO CHASSIS BRACKET

To suit models:
815-1107 & 1217-1523.
Mild steel with a black paint finish.
Supplied with Ø30mm zinc-plated washer, 3mm thick.

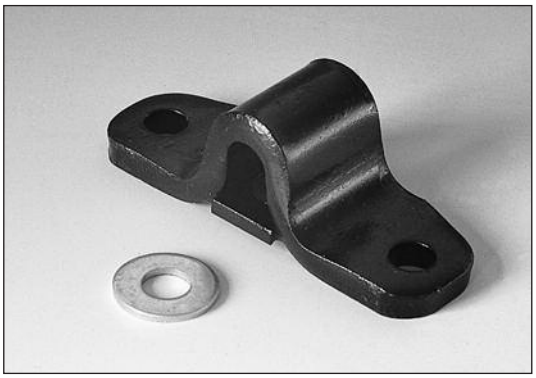

	A	B	C	D	E	F	G	H
6033/150					**Weight 560g/1.2lb**			
METRIC (mm)	*130*	*45*	*20*	*29*	*10*	*100*	*14*	
IMPERIAL (ins)	*5.12*	*1.77*	*0.79*	*1.14*	*0.39*	*3.94*	*0.55*	

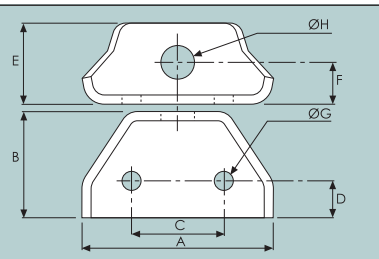

MERCEDES ATEGO CHASSIS BRACKET

To suit models:
815-1107, 1217-1523, 1823, 1828, 2523, 2528, 2628B & cab with 'Actross' chassis.
Mild steel with a black paint finish.

	A	B	C	D	E	F	G	H
6033/151					**Weight 330g/11.6oz**			
METRIC (mm)	*104*	*55*	*50*	*20*	*45*	*25*	*12.5*	*19*
IMPERIAL (ins)	*4.09*	*2.17*	*1.97*	*0.79*	*1.77*	*0.98*	*0.49*	*0.75*
6033/158					**Weight 330g/11.6oz**			
METRIC (mm)	*104*	*55*	*50*	*20*	*45*	*25*	*14.5*	*19*
IMPERIAL (ins)	*4.09*	*2.17*	*1.97*	*0.79*	*1.77*	*0.98*	*0.57*	*0.75*

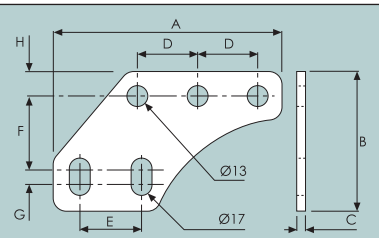

MERCEDES ATEGO CHASSIS PLATE

To suit models:
815-1107.
Mild steel with a black paint finish.

	A	B	C	D	E	F	G	H
6033/152					**Weight 800g/1.8lb**			
METRIC (mm)	*188*	*119*	*8.0*	*50*	*50*	*66*	*13*	*20*
IMPERIAL (ins)	*7.40*	*4.61*	*0.32*	*1.97*	*1.97*	*2.60*	*0.51*	*0.79*

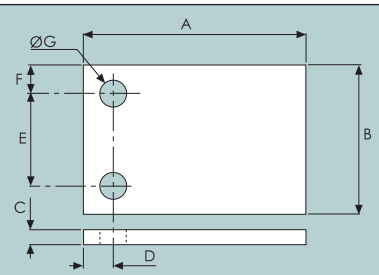

MERCEDES ATEGO CHASSIS PLATE

To suit models:
815-1107.
Mild steel with a black paint finish.

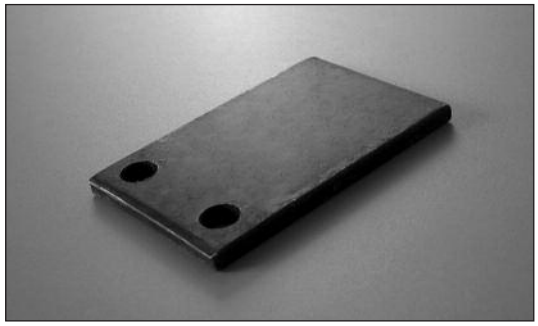

	A	B	C	D	E	F	G	H
6033/153					**Weight 570g/1.3lb**			
METRIC (mm)	*120*	*80*	*8.0*	*16*	*50*	*15*	*14*	
IMPERIAL (ins)	*4.72*	*3.15*	*0.32*	*0.63*	*1.97*	*0.59*	*0.55*	

Mercedes

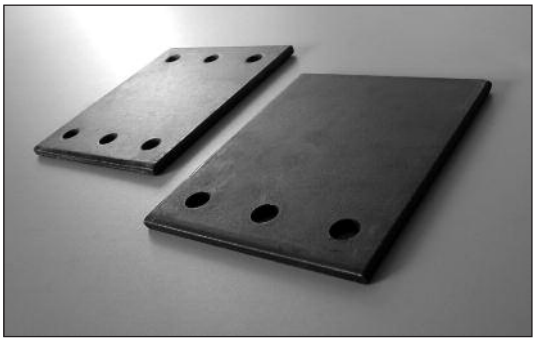

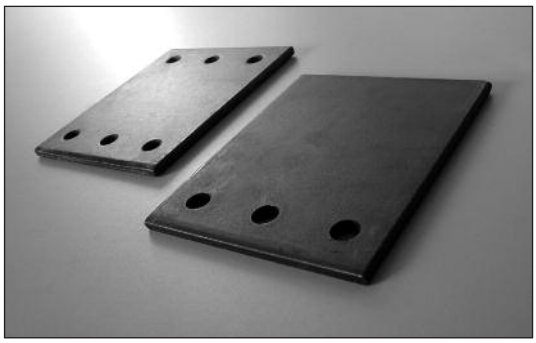

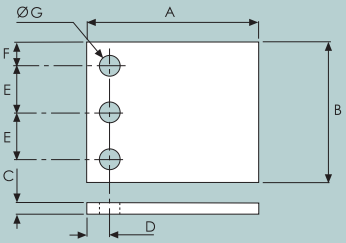

MERCEDES ATEGO CHASSIS PLATE

To suit models: 1217-1523. Mild steel with a black paint finish.

	A	B	C	D	E	F	G	H
6033/154						**Weight 1.6kg/3.5lb**		
METRIC (mm)	185	150	8.0	25	50	25	14.5	
IMPERIAL (ins)	7.28	5.91	0.32	0.98	1.97	0.98	0.57	

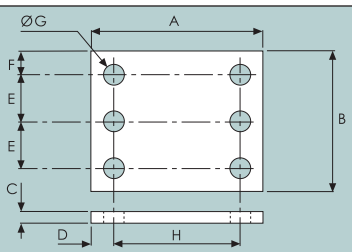

MERCEDES ATEGO CHASSIS PLATE

To suit models: 1217-1523. Mild steel with a black paint finish.

	A	B	C	D	E	F	G	H
6033/155						**Weight 1.6kg/3.5lb**		
METRIC (mm)	185	150	8.0	25	50	25	14.5	135
IMPERIAL (ins)	7.28	5.91	0.32	0.98	1.97	0.98	0.57	5.32

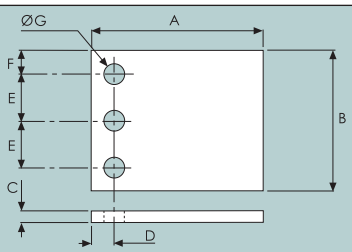

MERCEDES ATEGO CHASSIS PLATE

To suit models: 1823, 1828, 2523, 2528, 2628B & cab with 'Actross' chassis. Mild steel with a black paint finish.

	A	B	C	D	E	F	G	H
6033/156						**Weight 1.3kg/2.9lb**		
METRIC (mm)	155	150	8.0	25	50	25	14.5	
IMPERIAL (ins)	6.10	5.91	0.32	0.98	1.97	0.98	0.57	

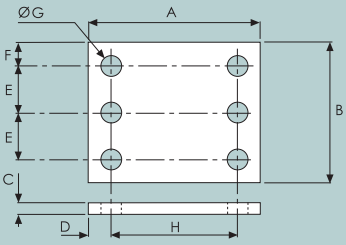

MERCEDES ATEGO CHASSIS PLATE

To suit models: 1823, 1828, 2523, 2528, 2628B & cab with 'Actross' chassis. Mild steel with a black paint finish.

	A	B	C	D	E	F	G	H
6033/157						**Weight 1.3kg/2.9lb**		
METRIC (mm)	155	150	8.0	25	50	25	14.5	105
IMPERIAL (ins)	6.10	5.91	0.32	0.98	1.97	0.98	0.57	4.13

Body Mounting Brackets

Mercedes

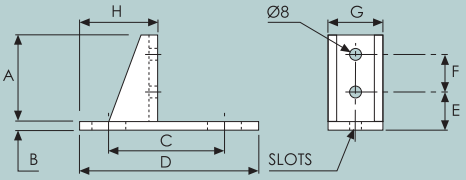

PEDESTAL MOUNTING BRACKET

Fabricated mild steel with a black paint finish. Suitable for Mercedes Sprinter chassis'.

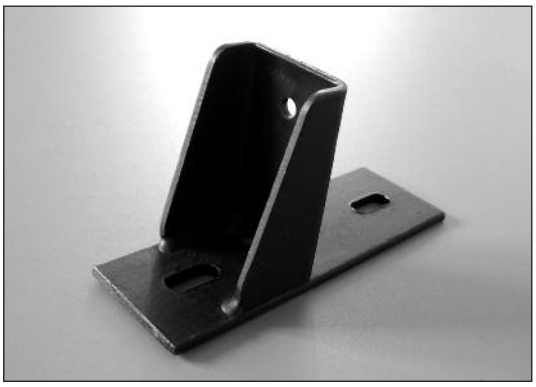

	A	B	C	D	E	F	G	H
6033/113GA					**Weight 610g/1.4lb**			
METRIC (mm)	*90*	*6.0*	*116*	*178*	*25*	*50*	*60*	*78*
IMPERIAL (ins)	*3.54*	*0.24*	*4.57*	*7.0*	*0.98*	*1.97*	*2.36*	*3.07*
Slots = Ø10mm x 25mm								

General Purpose

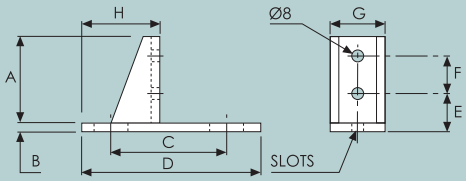

PEDESTAL MOUNTING BRACKET

Fabricated, mild-steel with a black finish. Previously used on pre-Oct '91 chassis on Ford Cargo. Also used on Mercedes (307, 308 & 207 Series) and the VW, LT range.

	A	B	C	D	E	F	G	H
6033/024	**For 4" runners**				**Weight 610g/1.4lb**			
METRIC (mm)	*90*	*6*	*116*	*178*	*36.5*	*40*	*55*	*77*
IMPERIAL (ins)	*3.54*	*0.24*	*4.57*	*7*	*1.44*	*1.58*	*2.12*	*3.03*
Slots = Ø10 mm x 30 mm								

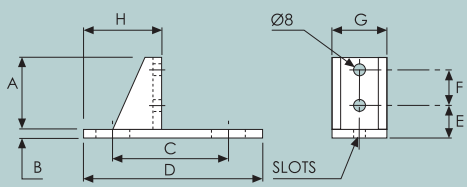

PEDESTAL MOUNTING BRACKET

Fabricated, mild-steel with a black finish. Previously used on pre-Oct '91 chassis on Ford Cargo. Also used on Mercedes (307, 308 & 207 Series) and the VW, LT range.

	A	B	C	D	E	F	G	H
6033/026	**For 3" runners**				**Weight 590g/1.3lb**			
METRIC (mm)	*70*	*6*	*116*	*178*	*25*	*36*	*55*	*77*
IMPERIAL (ins)	*2.76*	*0.24*	*4.57*	*7*	*0.98*	*1.42*	*2.12*	*3.03*
Slots = Ø10 mm x 30 mm								

General Purpose

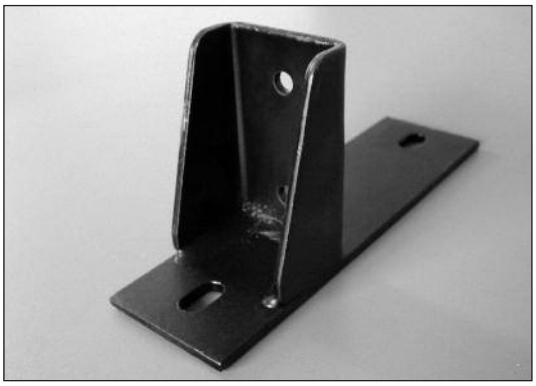

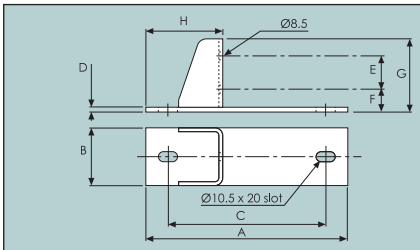

BODY MOUNTING BRACKETS

Fabricated mild steel. Brackets are black paint finish, with chassis plate left self colour to weld on. Suitable for Renault Master & Vauxhall Movano.

	A	B	C	D	E	F	G	H
6033/113MA	**Bracket for 4" runners.**				**Weight 820g/1.8lb**			
METRIC (mm)	*210*	*60.0*	*164*	*5.00*	*50.0*	*26.0*	*96.0*	*80.0*
IMPERIAL (ins)	*8.27*	*2.36*	*6.46*	*0.20*	*1.97*	*1.02*	*3.78*	*3.15*

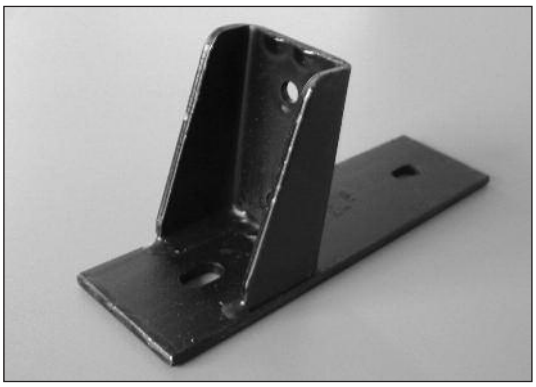

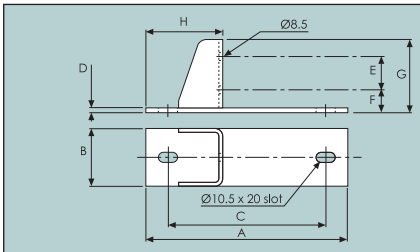

BODY MOUNTING BRACKETS

Fabricated mild steel. Brackets are black paint finish, with chassis plate left self colour to weld on. Suitable for Citroen 3.5 tonne & Fiat Relay, Boxer & Duccato.

	A	B	C	D	E	F	G	H
6033/113NA	**Bracket for 4" runners.**				**Weight 890g/1.9lb**			
METRIC (mm)	*225*	*60.0*	*145*	*5.00*	*50.0*	*26.0*	*96.0*	*83.0*
IMPERIAL (ins)	*8.86*	*2.36*	*5.71*	*0.20*	*1.97*	*1.02*	*3.78*	*3.27*

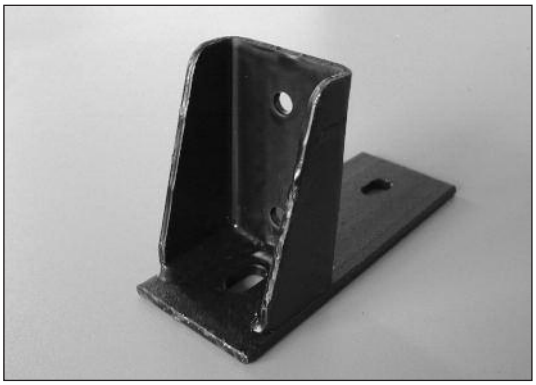

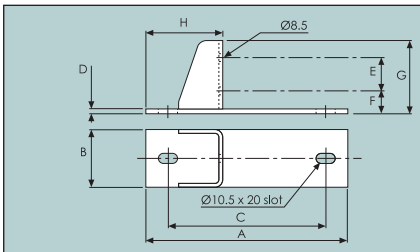

BODY MOUNTING BRACKETS

Fabricated mild steel. Brackets are black paint finish, with chassis plate left self colour to weld on. Suitable for Ford Transit.

	A	B	C	D	E	F	G	H
6033/113Y	**Bracket for 4" runners.**				**Weight 720g/1.6lb**			
METRIC (mm)	*164*	*60.0*	*100*	*5.00*	*50.0*	*20.0*	*90.0*	*57.0*
IMPERIAL (ins)	*6.46*	*2.36*	*3.94*	*0.20*	*1.97*	*0.79*	*3.54*	*2.24*

Body Mounting Brackets

General Purpose

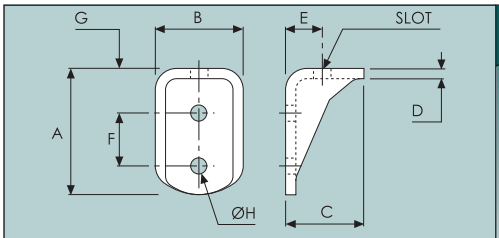

PEDESTAL MOUNTING BRACKET

Pressed, mild-steel with a black finish.
For 4" and 5" runners.
Slot = Ø16 x 19mm.

	A	B	C	D	E	F	G	H
6033/023					**Weight 350g/12.4oz**			
6033/113S					**Weight 320g/11.3oz**			
METRIC (mm)	*96*	*62*	*58*	*5*	*36*	*45*	*30*	*11*
IMPERIAL (ins)	*3.78*	*2.44*	*2.28*	*0.2*	*1.42*	*1.77*	*1.18*	*0.43*
Pressed alternative to 6033/113A								

Left - 6033/113A *Right - 6033/023*

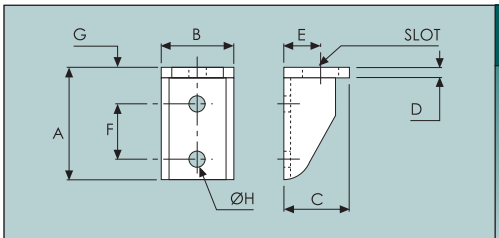

PEDESTAL MOUNTING BRACKET

Fabricated, mild-steel with a black finish.
For 4" and 5" runners.
Slot = Ø12.5 x 23mm.

	A	B	C	D	E	F	G	H
6033/113A					**Weight 550g/1.2lb**			
METRIC (mm)	*98*	*60*	*54*	*8*	*32*	*45*	*32*	*11.4*
IMPERIAL (ins)	*3.78*	*2.36*	*2.13*	*0.32*	*1.26*	*1.77*	*1.26*	*0.45*
Fabricated alternative to 6033/023 & 113S								

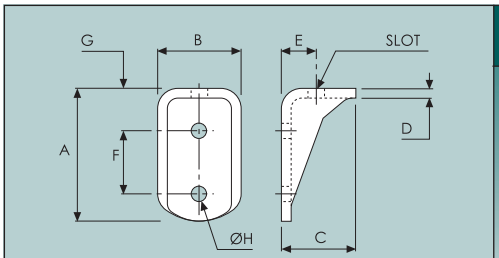

PEDESTAL MOUNTING BRACKET

Pressed, mild-steel with a black finish.
For runners 5" and over.
Used previously on Ford Cargo with pre-Oct.'91 chassis.
Slot = Ø16 x 19 mm.

	A	B	C	D	E	F	G	H
6033/028					**Weight 380g/13.4oz**			
METRIC (mm)	*110*	*62.0*	*58.0*	*5.00*	*38.0*	*58.0*	*29.0*	*12.5*
IMPERIAL (ins)	*4.33*	*2.44*	*2.28*	*0.20*	*1.50*	*2.28*	*1.14*	*0.49*

General Purpose

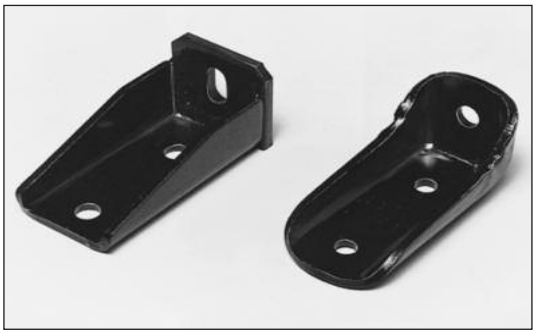

Left - 6033/111 Right - 6033/007

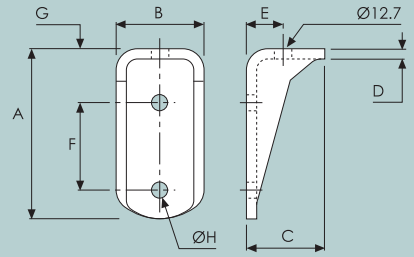

PEDESTAL MOUNTING BRACKET

Pressed, mild-steel with a black finish.
For runners 5" and over.

	A	B	C	D	E	F	G	H
6033/007					**Weight 450g/1lb**			
METRIC (mm)	124	62	58	5	32	65	38	11
IMPERIAL (ins)	4.88	2.44	2.28	0.20	1.26	2.56	1.50	0.43
Pressed alternative to 6033/111								

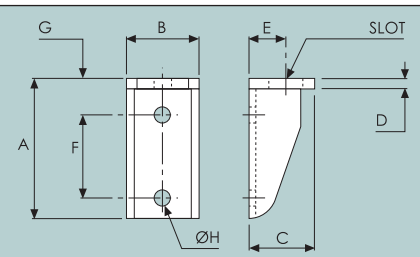

PEDESTAL MOUNTING BRACKET

Pressed, mild-steel with a black finish.
Slot = Ø12.7 x 24 mm.

	A	B	C	D	E	F	G	H
6033/111					**Weight 640g/1.4lb**			
METRIC (mm)	120	60	38	8	32	65	40	12.5
IMPERIAL (ins)	4.72	2.36	1.50	0.32	1.26	2.56	1.58	0.49
Fabricated alternative to 6033/007								

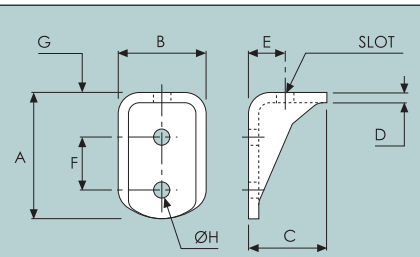

PEDESTAL MOUNTING BRACKET

Pressed, mild-steel with a black finish.
A general purpose bracket primarily used on the Mercedes.
Slot = Ø12.5 x 16mm.

	A	B	C	D	E	F	G	H
6033/113T					**Weight 340g/12oz**			
METRIC (mm)	92	60	58	5	22	45	28	11
IMPERIAL (ins)	3.62	2.36	2.28	0.20	0.87	1.77	1.10	0.43

Body Mounting Brackets

General Purpose

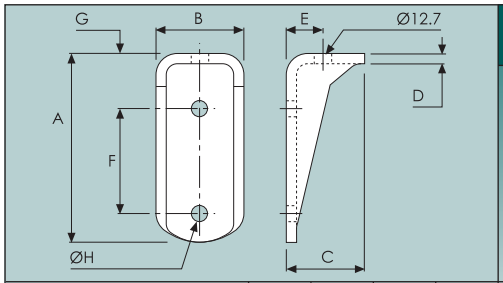

BODY MOUNTING BRACKET

Pressed steel, with a black finish.
To suit Leyland Roadrunner.

	A	B	C	D	E	F	G	H
6033/030					**Weight 430g/15.2oz**			
METRIC (mm)	132	62	56	5	32	85	32	12.5
IMPERIAL (ins)	5.20	2.44	2.21	0.20	1.26	3.35	1.26	0.50

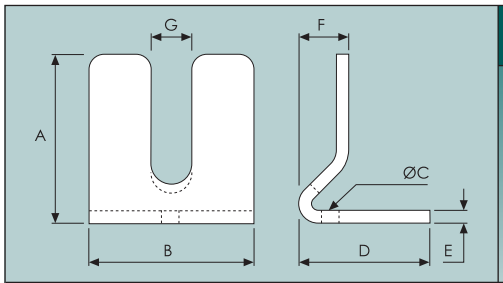

BODY MOUNTING BRACKET

Pressed steel, with a black finish.
To suit 1300 Series Leyland Roadrunner.
For use with 6033/753 plate & 6033/755 tie-rod.

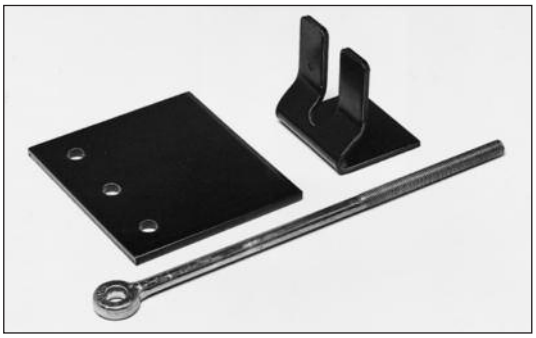

	A	B	C	D	E	F	G	H
6033/751					**Weight 460g/1lb**			
METRIC (mm)	90.0	80.0	13.0	76.0	5.00	25.0	20.0	
IMPERIAL (ins)	3.54	3.15	0.51	2.99	0.20	0.98	0.79	

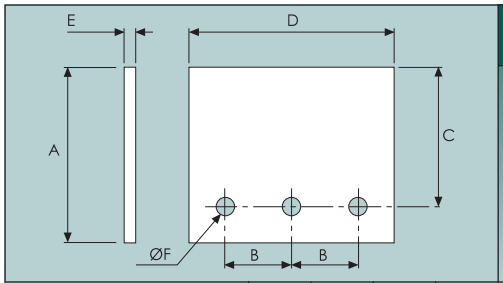

RETAINER PLATE

Black finish.
To suit Leyland Roadrunner.
For use with 6033/751 bracket & 6033/755 tie-rod.

	A	B	C	D	E	F	G	H
6033/753					**Weight 1.2kg/2.7lb**			
METRIC (mm)	135	50.0	110	150	8.00	13.0		
IMPERIAL (ins)	5.32	1.97	4.33	5.91	0.32	0.51		

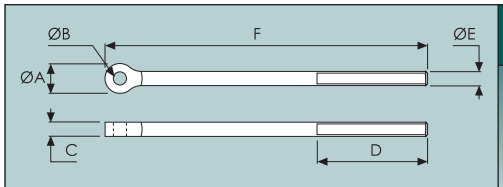

BOLT-ON,TIE-BAR

Electro zinc-plated.
To suit Leyland Freighter.

	A	B	C	D	E	F	G	H
6033/755					**Weight 260g/9.2oz**			
METRIC (mm)	30.0	13.0	13.0	145	M12	350		
IMPERIAL (ins)	1.18	0.51	0.51	5.71		13.8		
6033/754					**Weight 580g/1.3lb**			
METRIC (mm)	38.0	17.0	16.5	175	M16	450		
IMPERIAL (ins)	1.50	0.67	0.65	6.89		17.7		

General Purpose

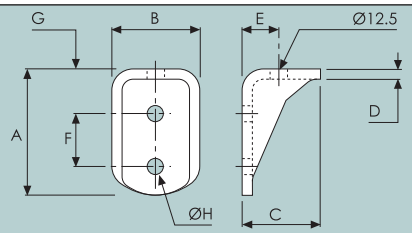

PEDESTAL MOUNTING BRACKET

Pressed steel with a black finish.
To suit Iveco/Ford Cargo.

	A	B	C	D	E	F	G	H
6033/022	**For 4" & 5" runners**				**Weight 360g/12.7oz**			
METRIC (mm)	*96*	*62*	*60*	*5*	*32*	*45*	*29*	*11*
IMPERIAL (ins)	*3.78*	*2.44*	*2.36*	*0.20*	*1.26*	*1.77*	*1.10*	*0.43*

Pressed alternative to 6033/113AA

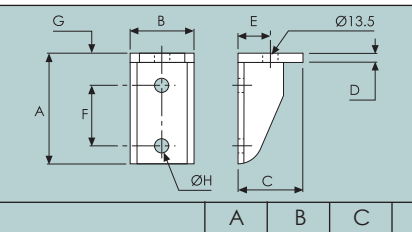

PEDESTAL MOUNTING BRACKET

Fabricated steel with a black finish.
To suit Iveco/Ford Cargo.

	A	B	C	D	E	F	G	H
6033/113AA	**For 4" & 5" runners**				**Weight 550g/1.2lb**			
METRIC (mm)	*98*	*60*	*54*	*8*	*32*	*45*	*32*	*11.4*
IMPERIAL (ins)	*3.86*	*2.36*	*2.13*	*0.32*	*1.26*	*1.77*	*1.26*	*0.45*

Fabricated alternative to 6033/022

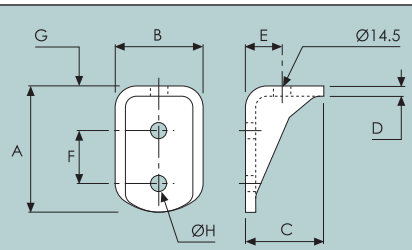

PEDESTAL MOUNTING BRACKET

Pressed steel with a black finish.
To suit Cargo 60E - 100E.

	A	B	C	D	E	F	G	H
6033/113U					**Weight 330g/11.7oz**			
METRIC (mm)	*92*	*60*	*58*	*5*	*32*	*45*	*28*	*11.5*
IMPERIAL (ins)	*3.62*	*2.36*	*2.28*	*0.20*	*1.26*	*1.77*	*1.10*	*0.45*

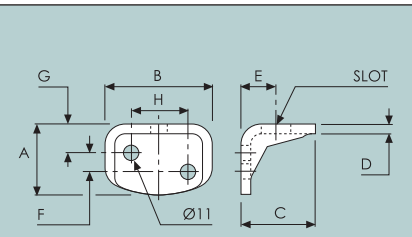

PEDESTAL MOUNTING BRACKET

Pressed, mild-steel with a black finish.
For 3" and 4" runners.

	A	B	C	D	E	F	G	H
6033/113V	**Slot = Ø12.5 x 24mm**				**Weight 430g/15.2oz**			
METRIC (mm)	*73.0*	*85.0*	*64.0*	*5.00*	*32.0*	*24.0*	*30.0*	*40.0*
IMPERIAL (ins)	*2.87*	*3.35*	*2.52*	*0.20*	*1.26*	*0.95*	*1.18*	*1.58*

Body Mounting Brackets

General Purpose

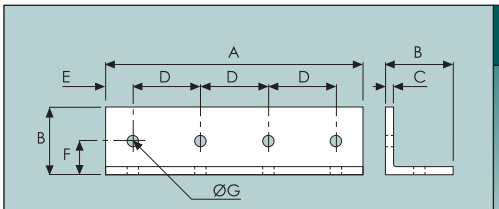

ANGLE BEARER BRACKET

Galvanised steel angle.

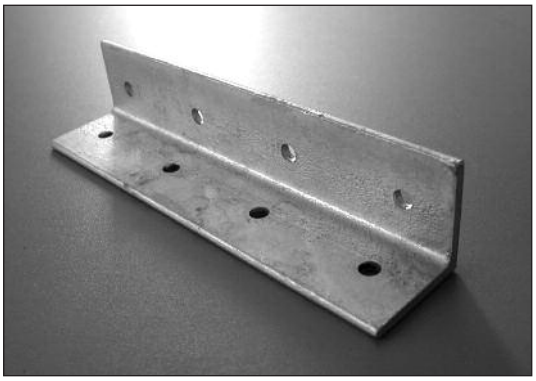

	A	B	C	D	E	F	G	H
6033/4040					**Weight 413g/14.5oz**			
METRIC (mm)	*190*	*40*	*4.0*	*50*	*20*	*20*	*6.75*	
IMPERIAL (ins)	*7.48*	*1.58*	*0.16*	*1.97*	*0.79*	*0.79*	*0.27*	
6033/5050					**Weight 778g/1.7lb**			
METRIC (mm)	*190*	*50*	*6.0*	*50*	*20*	*25*	*8.4*	
IMPERIAL (ins)	*7.48*	*1.97*	*0.24*	*1.97*	*0.79*	*0.98*	*0.33*	

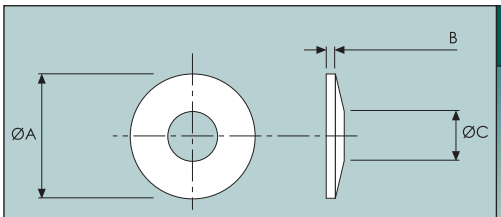

DISC WASHER

Zinc-plated steel.

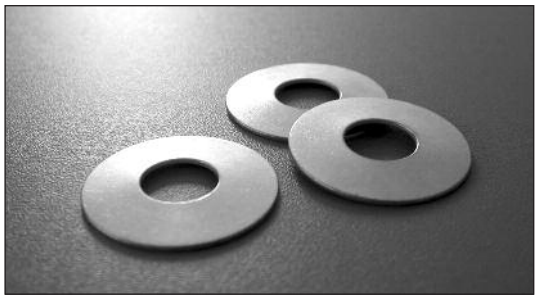

	A	B	C	D	E	F	G	H
6035/001					**Weight 5g/0.2oz**			
METRIC (mm)	*31.3*	*2.00*	*12.3*					
IMPERIAL (ins)	*1.23*	*0.08*	*0.48*					
6035/002					**Weight 5g/0.2oz**			
METRIC (mm)	*31.5*	*1.50*	*16.3*					
IMPERIAL (ins)	*1.24*	*0.06*	*0.64*					

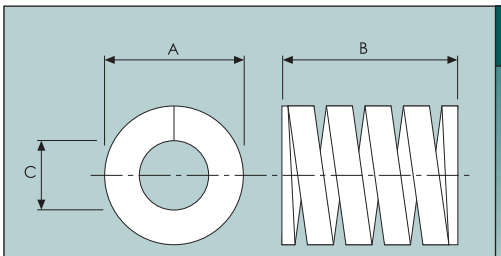

MOUNTING BRACKET SPRING

Yellow paint finish.
Suitable for Iveco/Ford.

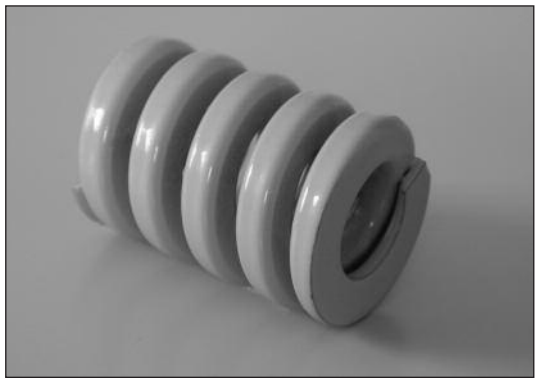

	A	B	C	D	E	F	G	H
6033/113J					**Weight 110g/3.9oz**			
METRIC (mm)	*32*	*44*	*16*					
IMPERIAL (ins)	*1.26*	*1.73*	*0.63*					

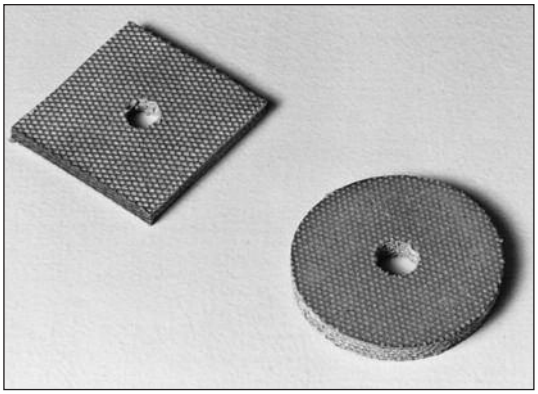

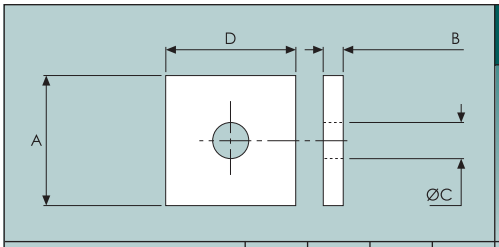

BALATA PACKING WASHER

3 ply.

	A	B	C	D	E	F	G	H
6031/015					**Weight 20g/0.7oz**			
METRIC (mm)	*60*	*4*	*11.5*	*50*				
IMPERIAL (ins)	*2.36*	*0.16*	*0.45*	*1.97*				

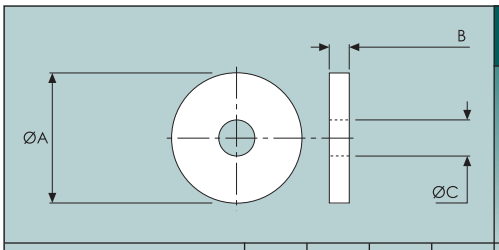

BALATA PACKING WASHER

4 ply.

	A	B	C	D	E	F	G	H
6031/016					**Weight 20g/0.7oz**			
METRIC (mm)	*55*	*5.5*	*11.5*					
IMPERIAL (ins)	*2.17*	*0.22*	*0.45*					

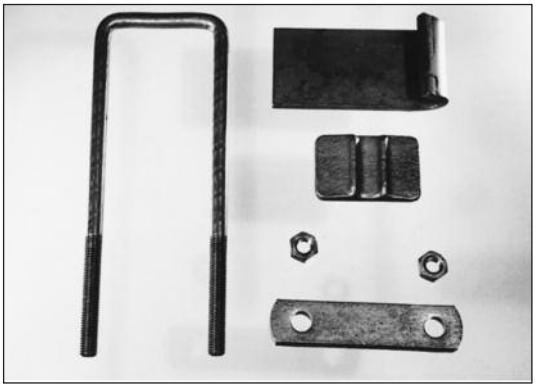

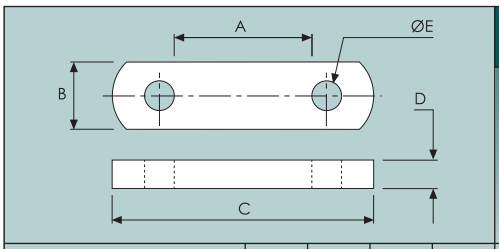

U-BOLT PLATES

Self colour, mild steel.

	A	B	C	D	E	F	G	H
2619/001					**Weight 310g/11oz**			
METRIC (mm)	*77*	*30*	*129*	*12*	*13*			
IMPERIAL (ins)	*3.00*	*1.20*	*5.10*	*0.47*	*0.51*			
2619/002					**Weight 340g/12oz**			
METRIC (mm)	*89*	*30*	*140*	*12*	*13*			
IMPERIAL (ins)	*3.50*	*1.20*	*5.50*	*0.47*	*0.51*			
2619/004					**Weight 340g/12oz**			
METRIC (mm)	*89*	*30*	*142*	*12*	*17*			
IMPERIAL (ins)	*3.50*	*1.20*	*5.60*	*0.47*	*0.67*			

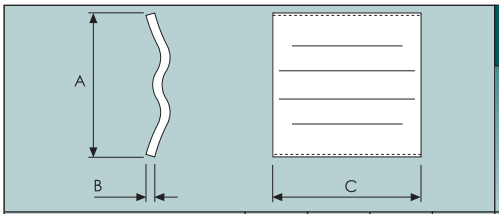

'U' BOLT BEARER PLATE

Self-colour, mild steel.

	A	B	C	D	E	F	G	H
4031/001					**Weight 150g/5.3oz**			
METRIC (mm)	*75*	*5*	*50*					
IMPERIAL (ins)	*3.00*	*0.20*	*2.00*					

2622/013 M12 Self colour nut
4034/001 'J' clip, self colour

continued overleaf . . .

U Bolts

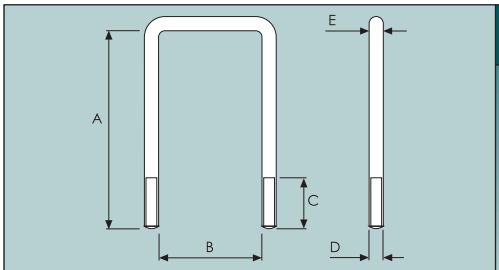

'U' BOLTS

Self colour steel.
Complete with nuts.

	A	B	C	D	E	F	G	H
2622/002					**Weight 530g/1.2lb**			
METRIC (mm)	*254*	*76.2*	*82.5*	*M12*	*12*			
IMPERIAL (ins)	*10*	*3.00*	*3.25*		*0.47*			
2622/003					**Weight 620g/1.4lb**			
METRIC (mm)	*305*	*76.2*	*82.5*	*M12*	*12*			
IMPERIAL (ins)	*12*	*3.00*	*3.25*		*0.47*			
2622/004					**Weight 700g/1.5lb**			
METRIC (mm)	*356*	*76.2*	*82.5*	*M12*	*12*			
IMPERIAL (ins)	*14*	*3.00*	*3.25*		*0.47*			
2622/005					**Weight 780g/1.7lb**			
METRIC (mm)	*406*	*76.2*	*76.2*	*M12*	*12*			
IMPERIAL (ins)	*16*	*3.00*	*3.00*		*0.47*			
2622/006					**Weight 920g/2lb**			
METRIC (mm)	*457*	*76.2*	*76.2*	*M12*	*12*			
IMPERIAL (ins)	*18*	*3.00*	*3.00*		*0.47*			
2622/007					**Weight 970g/2.1lb**			
METRIC (mm)	*508*	*76.2*	*82.5*	*M12*	*12*			
IMPERIAL (ins)	*20*	*3.00*	*3.25*		*0.47*			
2622/008					**Weight 620g/1.4lb**			
METRIC (mm)	*305*	*89*	*82.5*	*M12*	*12*			
IMPERIAL (ins)	*12*	*3.50*	*3.25*		*0.47*			
2622/009					**Weight 700g/1.5lb**			
METRIC (mm)	*356*	*89*	*76.2*	*M12*	*12*			
IMPERIAL (ins)	*14*	*3.50*	*3.00*		*0.47*			
2622/010					**Weight 800g/1.8lb**			
METRIC (mm)	*406*	*89*	*76.2*	*M12*	*12*			
IMPERIAL (ins)	*16*	*3.50*	*3.00*		*0.47*			
2622/011					**Weight 900g/2lb**			
METRIC (mm)	*457*	*89*	*76.2*	*M12*	*12*			
IMPERIAL (ins)	*18*	*3.50*	*3.00*		*0.47*			
2622/012					**Weight 1kg/2.2lb**			
METRIC (mm)	*508*	*89*	*76.2*	*M12*	*12*			
IMPERIAL (ins)	*20*	*3.50*	*3.00*		*0.47*			
2622/014					**Weight 1.3kg/2.9lb**			
METRIC (mm)	*356*	*89*	*82.5*	*M16*	*16*			
IMPERIAL (ins)	*14*	*3.50*	*3.25*		*0.63*			
2622/015					**Weight 1.4kg/3.1lb**			
METRIC (mm)	*406*	*89*	*82.5*	*M16*	*16*			
IMPERIAL (ins)	*16*	*3.50*	*3.25*		*0.63*			
2622/016					**Weight 1.6kg/3.5lb**			
METRIC (mm)	*457*	*89*	*82.5*	*M16*	*16*			
IMPERIAL (ins)	*18*	*3.50*	*3.25*		*0.63*			

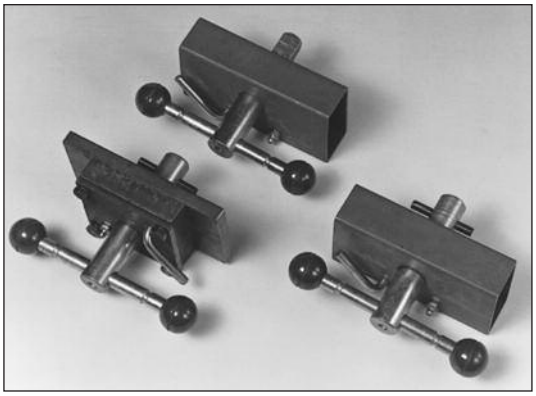

Top centre: 9212/005
Left: 9209/001 Right: 9212/001

NB. The illustration below shows positioning of left and right hand tensioners.

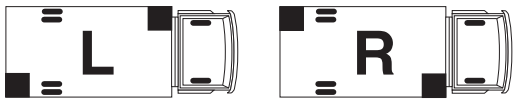

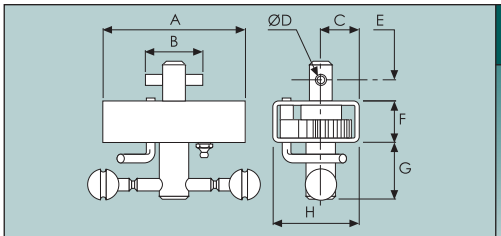

CURTAIN TENSIONER

Box type with bayonet drive.
Painted steel body.

	A	B	C	D	E	F	G	H
9212/001 **Left hand (shown)** **Weight 1.78kg/3.9lb**								
9212/002 **Right hand**								
METRIC (mm)	*150*	*61*	*33*	*8*	*21*	*40*	*55*	*80*
IMPERIAL (ins)	*5.91*	*2.40*	*1.30*	*0.32*	*0.83*	*1.58*	*2.17*	*3.15*

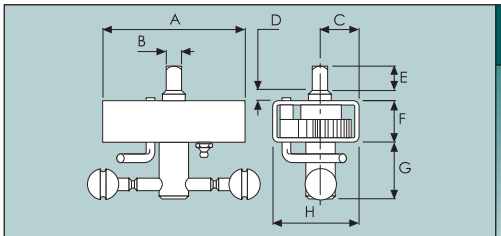

CURTAIN TENSIONER

Box type with square drive.
Painted steel body.

	A	B	C	D	E	F	G	H
9212/005 **Left hand (shown)** **Weight 1.75kg/3.8lb**								
9212/006 **Right hand**								
METRIC (mm)	*150*	*18*	*33*	*12*	*26*	*40*	*55*	*80*
IMPERIAL (ins)	*5.91*	*0.71*	*1.30*	*0.49*	*1.02*	*1.58*	*2.17*	*3.15*

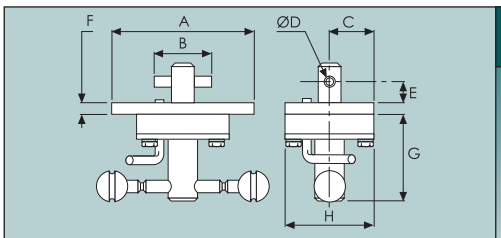

HEAVY DUTY CURTAIN TENSIONER

Bolted, mild-steel construction.

	A	B	C	D	E	F	G	H
9209/001 **Left hand (shown)** **Weight 3.14kg/6.9lb**								
9209/002 **Right hand**								
METRIC (mm)	*150*	*61*	*40*	*8*	*22*	*12*	*82*	*90*
IMPERIAL (ins)	*5.91*	*2.40*	*1.58*	*0.32*	*0.87*	*0.49*	*3.23*	*3.54*

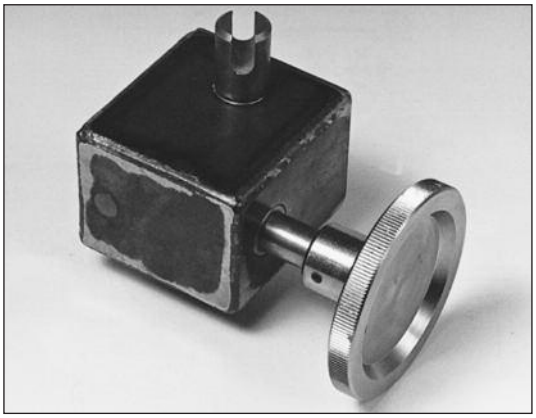

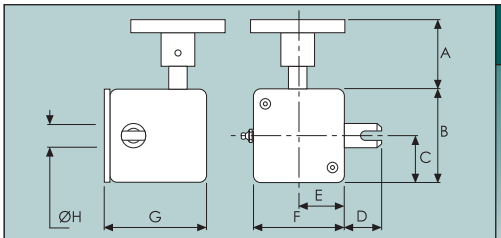

CURTAIN TENSIONER

Compact worm drive with a 14:1 ratio.
Self-colour steel.

	A	B	C	D	E	F	G	H
9212/201 **Left hand (shown)** **Weight 3.1kg/6.7lb**								
9212/202 **Right hand** **Weight 3.1kg/6.7lb**								
METRIC (mm)	*71*	*90*	*45*	*35*	*35*	*70*	*95*	*25.4*
IMPERIAL (ins)	*2.80*	*3.54*	*1.77*	*1.38*	*1.38*	*2.76*	*3.74*	*1.00*

Strap Assemblies

3000/5102	Complete assembly	Weight 3kg/6.6lb
	Comprises of:	
3000/56241	Ratchet + anchor strap + chassis hook	
3000/56260	Strap (10m) + chassis hook	
	Working length	*= 10m*
	Anchor length	*= 1500mm*
	Ultimate tensile strength	*= 5000kg*
	Load capacity	*= 2000daN*
3000/5811	305mm (12") Wear sleeve (sold seperately)	

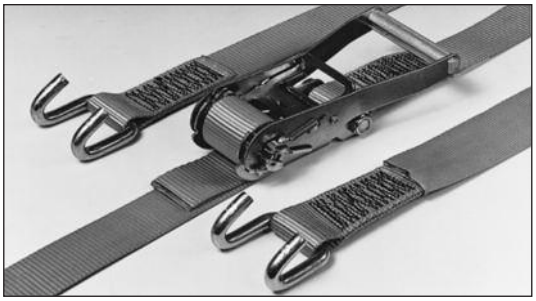

3000/5103	Complete assembly	Weight 2.72kg/6lb
	Comprises of:	
3000/56251	Ratchet + anchor strap + delta ring	
3000/56261	Strap (10m) + delta ring	
	Working length	*= 10m*
	Anchor length	*= 500mm*
	Ultimate tensile strength	*= 5000kg*
	Load capacity	*= 2000daN*
3000/5811	305mm (12") Wear sleeve (sold seperately)	

3000/5104	Complete assembly	Weight 3.1kg/6.8lb
	Comprises of:	
3000/56242	Ratchet + anchor strap + claw hook	
3000/5626	Strap (10m) + claw hook	
	Working length	*= 10m*
	Anchor length	*= 1500mm*
	Ultimate tensile strength	*= 5000kg*
	Load capacity	*= 2000daN*
3000/5811	305mm (12") Wear sleeve (sold seperately)	

3000/5180	Complete assembly	Weight 2.8kg/6.2lb
	Comprises of:	
3000/56250	Ratchet + anchor strap + claw hook	
3000/56268	Strap (8m) + claw hook	
	Working length	*= 8m*
	Anchor length	*= 500mm*
	Ultimate tensile strength	*= 5000kg*
	Load capacity	*= 2000daN*
3000/5811	305mm (12") Wear sleeve (sold seperately)	

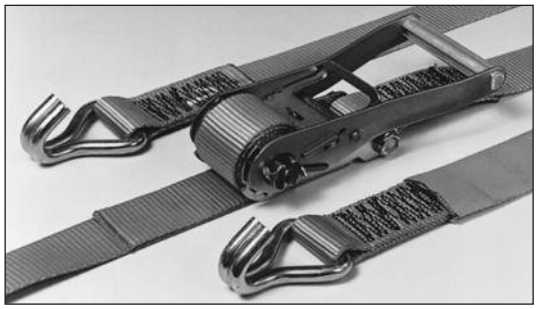

3000/5182	Complete assembly	Weight 2.5kg/5.5lb
	Comprises of:	
3000/56251	Ratchet + anchor strap + delta ring	
3000/56267	Strap (8m) + delta ring	
	Working length	*= 8m*
	Anchor length	*= 500mm*
	Ultimate tensile strength	*= 5000kg*
	Load capacity	*= 2000daN*
3000/5811	305mm (12") Wear sleeve (sold seperately)	

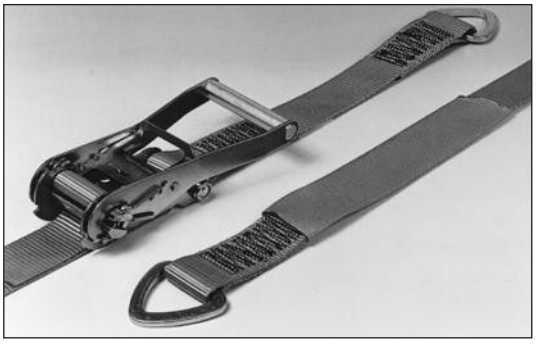

Strap Assemblies

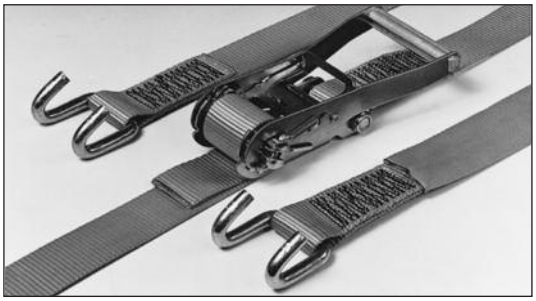

3000/5183	Complete assembly	Weight 2.5kg/5.5lb
	Comprises of:	
3000/581	Ratchet buckle	
3000/5803	Chassis hook (2 supplied)	
	Working length	*= 8m*
	Anchor length	*= 1500mm*
	Ultimate tensile strength	*= 5000kg*
	Load capacity	*= 2000daN*
3000/5811	305mm (12") Wear sleeve (sold seperately)	

3000/5331	Complete assembly	Weight 700g/1.5lb
	Comprises of:	
3000/586	Overcentre buckle	
3000/5861	Claw hook (2 supplied)	
3000/5883	Pull ring on tail	
3000/5732	Red webbing, 50mm wide	
	Working length	*= 3m*
	Anchor length	*= 900mm*
	Ultimate tensile strength	*= 700kg*
	Load capacity	*= 350daN*

3000/5332	Complete assembly	Weight 800g/1.8lb
	Comprises of:	
3000/584	Overcentre buckle c/w safety lock	
3000/5861	Claw hook (2 supplied)	
3000/5883	Pull ring on tail	
3000/5732	Red webbing, 50mm wide	
	Working length	*= 3m*
	Anchor length	*= 900mm*
	Ultimate tensile strength	*= 700kg*
	Load capacity	*= 350daN*

3000/5339	Complete assembly	Weight 620g/1.4lb
	Comprises of:	
3000/586	Overcentre buckle	
3000/5861	Claw hook (2 supplied)	
3000/573	Black webbing, 47mm wide	
	Working length	*= 2.75m*
	Anchor length	*= 900mm*
	Ultimate tensile strength	*= 700kg*
	Load capacity	*= 350daN*

CURTAIN SIDED VEHICLE STRAP		
	For vertical use:	
3000/5441	Complete assembly	Weight 1.1Kg/2.4lb
	Comprises of:	
	Overcentre buckle	
	Closed rave hook (bottom)	
	Flat snap-hook (top)	
	Black webbing, 50mm wide c/w three bar adjuster.	
	Working length	*= 4.25m*
	Anchor length	*= 3.6m*
	Ultimate tensile strength	*= 700kg*
	Load capacity	*= 350daN*
3000/5849	Ø75mm welded ring, (supplied separately).	

Strap Assemblies

CURTAIN SIDED VEHICLE STRAP		
	For vertical use:	
3000/5511	**Complete assembly**	**Weight 520g/1.2lb**
	Comprises of:	
3000/586	**Overcentre buckle**	
3000/5865	**Closed rave hook (bottom), stitched loop (top)**	
3000/573	**Black webbing, 47mm wide**	
	Working length	*= 1m*
	Anchor length	*= 150mm*
	Ultimate tensile strength	*= 700kg*
	Load capacity	*= 350daN*

REPLACEMENT TENSION END		
3000/5521	**Complete assembly**	**Weight 520g/1.2lb**
	Comprises of:	
3000/5865	**Closed rave hook**	
3000/573	**Black webbing, 47mm wide**	
	Working length	*= 1m*
	Load capacity	*= 350kg*

3000/5645	**Complete assembly**	**Weight 80g/2.8oz**
	Comprises of:	
3000/5875	**Die-cast, cam action buckle.**	
3000/5763	**Black webbing, 25mm wide**	
	Working length	*= 1m*
	Load capacity	*= 400kg*

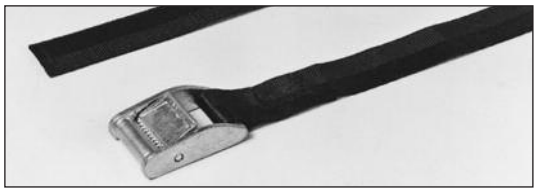

3000/56491	**Complete assembly**	**Weight 160g/5.6oz**
	Comprises of:	
3000/5876	**Die-cast, cam action buckle.**	
3000/5762	**Blue webbing, 25mm wide**	
	Working length	*= 2500mm*
	Ultimate tensile strength	*= 500kg*
	Load capacity	*= 250daN*

3000/56402	**Complete assembly**	**Weight 520g/1.2lb**
	Comprises of:	
3000/587	**Ratchet**	
3000/5762	**Blue webbing, 25mm wide**	
3000/5886	**Narrow claw hook, 25mm**	
	Working length	*= 3.0 m*
	Anchor length	*= 500mm*
	Ultimate tensile strength	*= 800kg*
	Load capacity	*= 400daN*

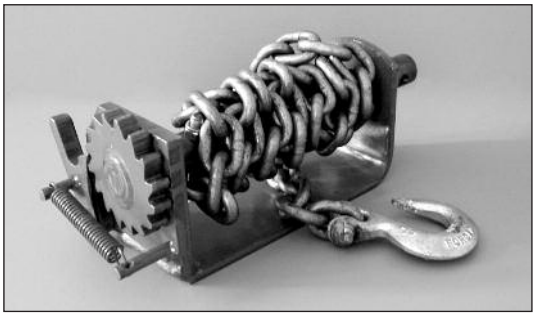

2710/004 - left hand

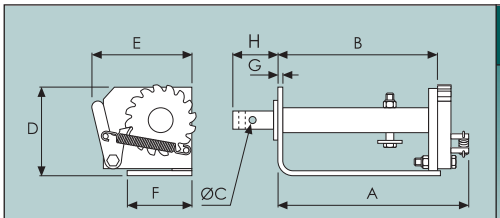

TRANSPORTER WINCH

Steel construction with 1143 mm (4'6") of 7 mm x 20 mm welded-link chain, ending with a forged hook with a 22 mm throat. S.W.L. = 500kg/1104lb.
Painted primer finish; left hand in blue; right hand in red.

	A	B	C	D	E	F	G	H
2710/004	**Left hand (shown)**				**Weight 5.4kg/11.9lb**			
2710/005	**Right hand**							
METRIC (mm)	*230*	*190*	*14*	*105*	*115*	*75*	*6*	*65*
IMPERIAL (ins)	*9.06*	*7.48*	*0.55*	*4.13*	*4.53*	*2.95*	*0.24*	*2.56*
2710/003	**Spare chain and hook**							

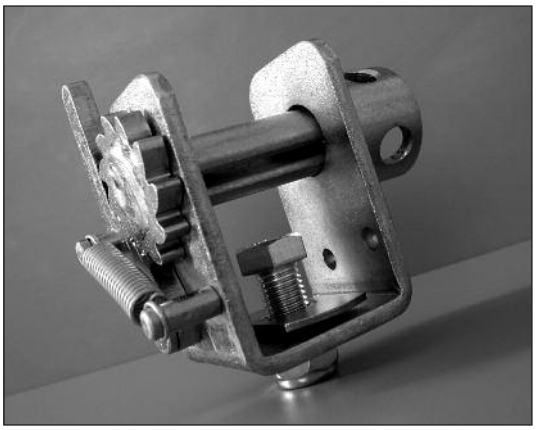

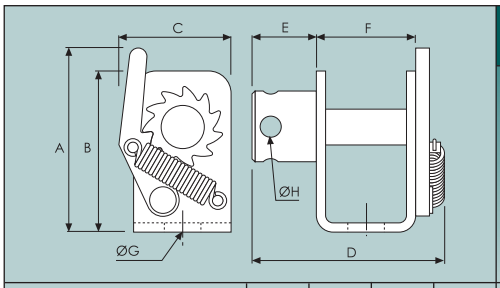

TRANSPORTER WINCH

Zinc-plated steel assembly with a gold passivated finish. Supplied with an M16 bolt and nyloc nut along with a shouldered collar to allow swivel action.
1500kg S.W.L

	A	B	C	D	E	F	G	H
2712/005	**Left hand (shown)**				**Weight 1.52kg/3.4lb**			
2712/006	**Right hand**							
METRIC (mm)	*114*	*98.0*	*60.0*	*122*	*34.0*	*66.0*	*24.5*	*13.5*
IMPERIAL (ins)	*4.49*	*3.86*	*2.36*	*4.80*	*1.34*	*2.60*	*0.97*	*0.53*

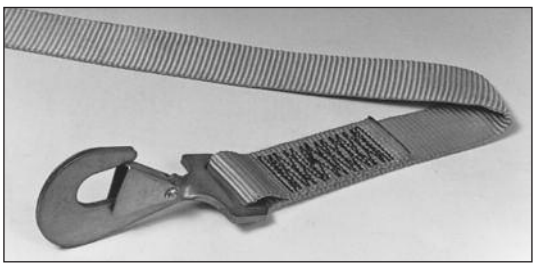

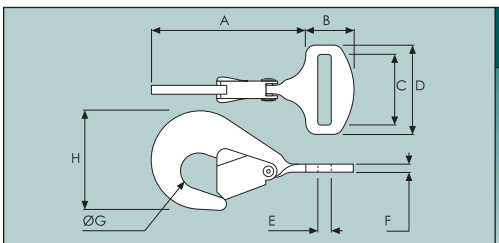

TWISTED SNAP HOOK & STRAP

Zinc-plated & gold passivated hook with 1.5m of strap.
2500kg S.W.L.

	A	B	C	D	E	F	G	H
2712/003					**Weight 450g/1lb**			
METRIC (mm)	*114*	*36*	*46*	*70*	*12*	*5.5*	*20*	*70*
IMPERIAL (ins)	*4.49*	*1.42*	*1.81*	*2.76*	*0.47*	*0.22*	*0.79*	*2.76*

Internal Tracking

3000/590	Eurotrack	Weight 6.9kg/15.2lb
	Zinc-plated, mild steel.	
	3048 mm (10') lengths.	
	For horizontal fixing.	

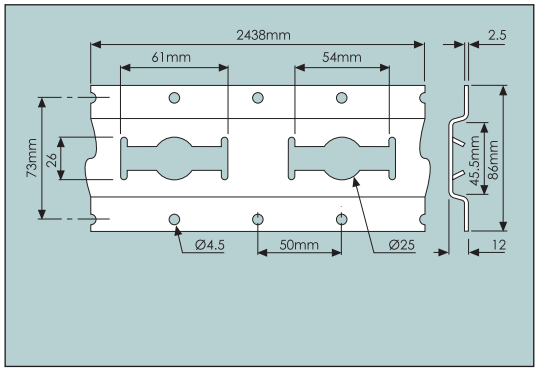

3000/591	'E' track	Weight 7.9kg/17.4lb
	Zinc-plated, mild steel.	
	3048 mm (10') lengths, Dim A = 2.5 mm	
	For horizontal fixing.	
3000/5911	**'E' track**	**Weight 3kg/6.6lb**
	Aluminium.	
	3048 mm (10') lengths, Dim A = 3 mm	
	For horizontal fixing.	

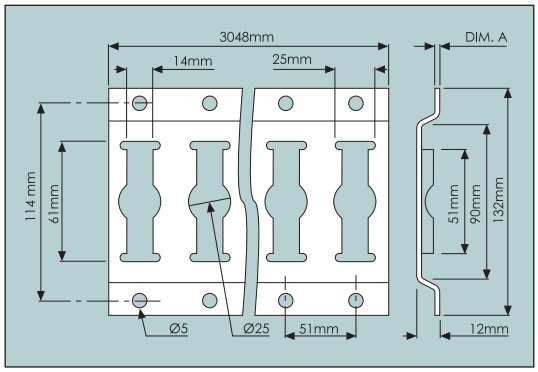

3000/5910	'E' track	Weight 6.1kg/13.5lb
	Zinc-plated, mild steel.	
	2438 mm (8') lengths.	
	For vertical fixing.	

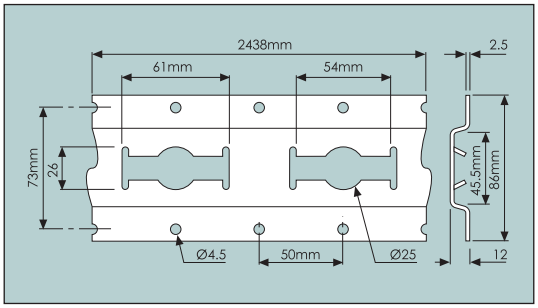

3000/594	Keyhole track	Weight 4.6kg/10.2lb
	Zinc-plated, mild steel.	
	3048 mm (10') lengths.	
	For vertical fixing.	

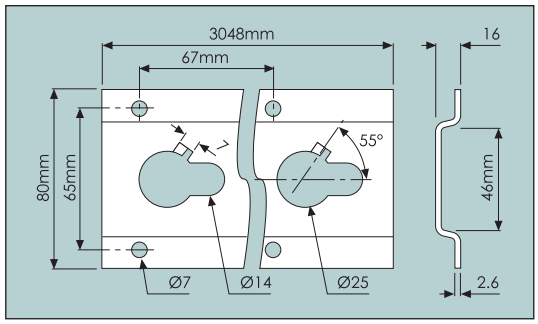

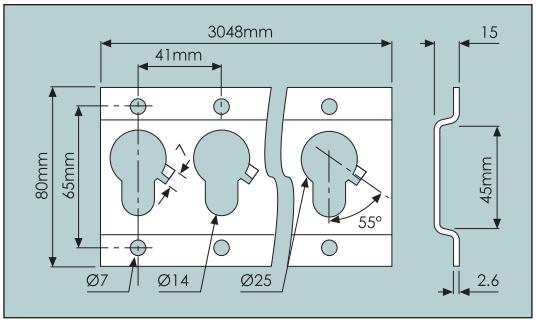

3000/5941	Keyhole track	Weight 4.6kg/10.2lb
	Zinc-plated, mild steel. *3048 mm (810) lengths.* *For horizontal fixing.*	

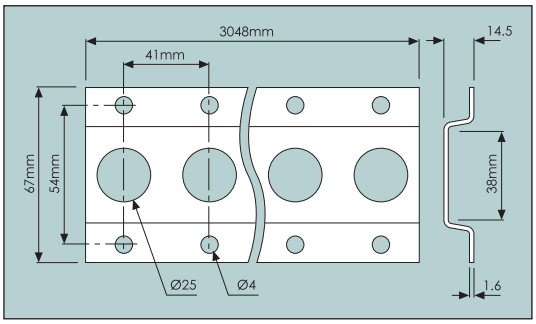

3000/595	Standard track	Weight 3.04kg/6.7lb
	Galvanised, mild steel. *3048 mm (10') lengths.* *For horizontal & vertical fixing.*	

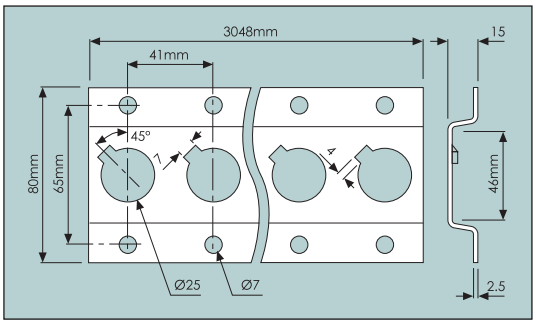

3000/596	Heavy duty track	Weight 3.7kg/8.2lb
	Zinc-plated, mild steel. *3048 mm (10') lengths.* *For horizontal & vertical fixing.*	

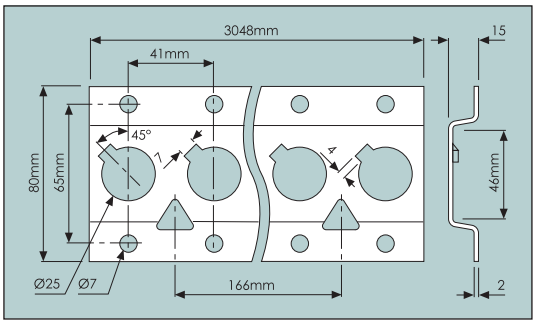

3000/597	Heavy duty track	Weight 4.8kg/10.7lb
	Stainless steel. *3048 mm (10') lengths.* *For horizontal fixing.*	

Internal Tracking

Shoring Poles

Spring loaded shoring poles	
	Zinc-plated, mild-steel construction.
	To fit Ø25.4mm (1") hole in track.
	Load rating = spot load ot centre of pole
3000/5932	**Adjustable shoring pole (round)**
	2-2.5m (78.7"-98.4") track to track
	Load rating = 230kg/508lb
3000/5933	**Pre-set width shoring pole (round)**
	2032-2108mm (80"-83") track to track
	Load rating = 230kg/508lb
3000/5934	**Pre-set width shoring pole (round)**
	2108-2184mm (83"-86") track to track
	Load rating = 230kg/508lb
3000/5935	**Pre-set width shoring pole (round)**
	2261-2336mm (89"-92") track to track
	Load rating = 230kg/508lb
3000/5936	**Pre-set width shoring pole (round)**
	2336-2413mm (92"-95") track to track
	Load rating = 230kg/508lb
3000/5983	**Adjustable shoring pole (50 mm square)**
	2080-2490mm (82"-98") track to track
	Load rating = 835kg/1843lb
3000/5984	**Adjustable shoring pole (45 mm square)**
	2080-2490mm (82"-98") track to track
	Load rating = 435kg/960lb

Heavy duty, rigid shoring bar		
	Zinc-plated, mild-steel tubing.	
	4 mm wall in 2.5 m lengths	
	Load rating = spot load at centre of bar	
3000/5988	**Rigid bar**	**Weight 13kg/28.7lb**
	60 mm x 40 mm (2.36" x 1.58")	
	Load rating = 1060kg/2340lb	

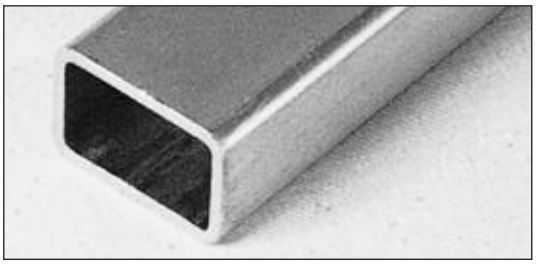

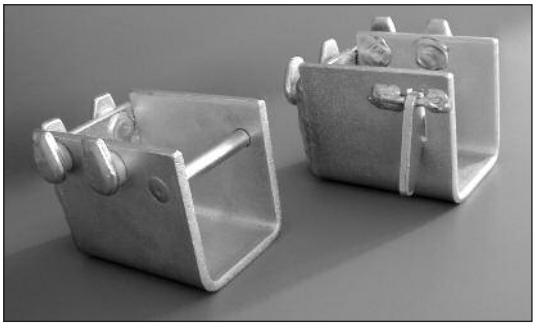

Left - 3000/5880 *Right - 3000/5879*

Heavy duty, cup brackets		
	Zinc-plated, welded-steel.	
	To fit Ø25.4 mm (1") hole in track at 41mm pitch.	
3000/5877	**Cup and catch**	**Weight 820g/1.8lb**
3000/5878	**Cup**	
	40 mm x 40 mm x 100 mm	
3000/58781	**Cup**	**Weight 1kg/2.2lb**
3000/58782	**Cup and catch**	
	40 mm x 40 mm x 75 mm	
3000/5880	**Cup**	**Weight 820g/1.8lb**
3000/5879	**Cup and catch**	
	60 mm x 40 mm x 100 mm	
	Used together to achieve parallel storage of shoring bars.	

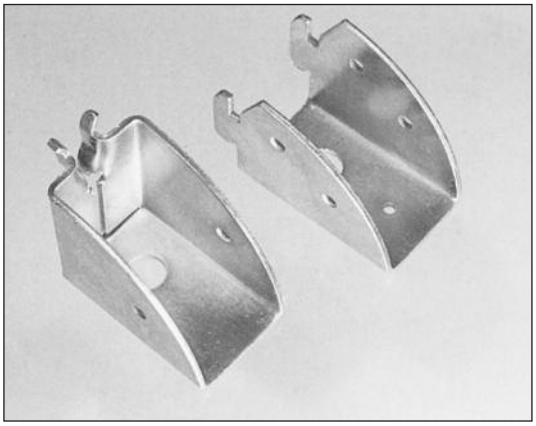

DECKING BRACKETS		
	Zinc-plated, pressed steel with a gold passivated finish.	
	To fit tracks with Ø25 holes at 41mm pitch.	
3000/5881	**41 mm wide**	**Weight 250g/8.8oz**
	To fit horizontal track 3000/596	
3000/5882	**41 mm wide**	**Weight 370g/11oz**
	To fit vertical & horizontal track 3000/590 & 596	

Lashing Rings

HEAVY DUTY LASHING RING

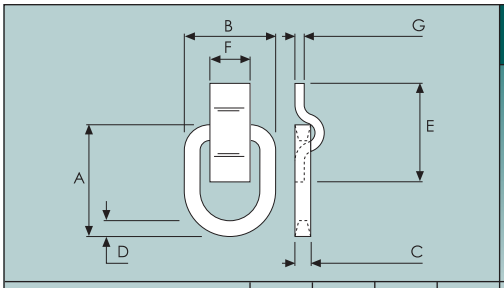

Self-colour, mild-steel cleat with a galvanised, forged steel D-ring.
5 tonne S.W.L.

	A	B	C	D	E	F	G	H
1060/001					**Weight 1.5kg/3.3lb**			
METRIC (mm)	*140*	*115*	*20*	*20*	*120*	*50*	*10*	
IMPERIAL (ins)	*5.51*	*4.53*	*0.79*	*0.79*	*4.72*	*1.97*	*0.40*	

FERRY LASHING RING

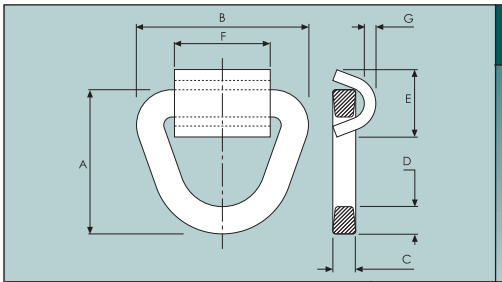

Self colour, mild steel cleat with a forged steel, galvanised triangular ring.
Conforms to EN29367 (ISO9367).

	A	B	C	D	E	F	G	H
1060/002					**Weight 2.95kg/6.5lb**			
METRIC (mm)	*151*	*176*	*25*	*28*	*70*	*100*	*12*	
IMPERIAL (ins)	*5.95*	*6.93*	*1.00*	*1.10*	*2.76*	*3.94*	*0.47*	

LASHING RING

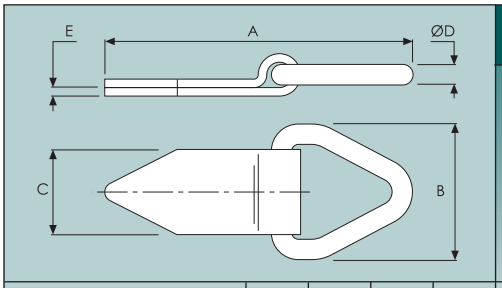

Self-colour, mild steel strap with a forged triangular ring.
1 tonne S.W.L.

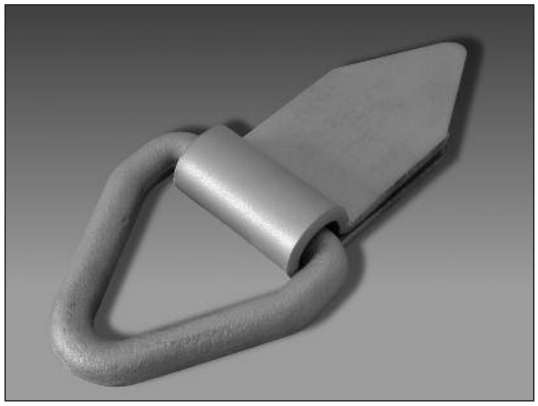

	A	B	C	D	E	F	G	H
1069/001					**Weight 640g/1.4lb**			
METRIC (mm)	*185*	*82*	*50*	*12.5*	*5*			
IMPERIAL (ins)	*7.28*	*3.23*	*1.97*	*0.49*	*0.20*			

RECESSED ROPE RING

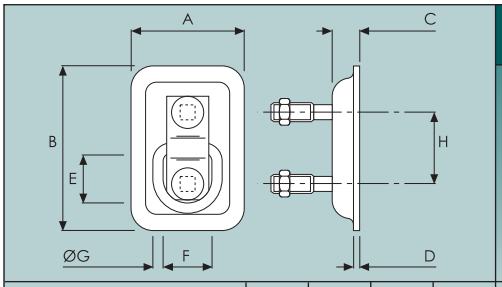

Zinc-plated, mild steel assembly, including 2 x M8 coachbolts.
Zinc plated, forged steel ring.
500kg S.W.L.

	A	B	C	D	E	F	G	H
1048/001					**Weight 330g/11.7oz**			
METRIC (mm)	*70*	*106*	*16*	*3*	*31*	*31*	*65*	*45*
IMPERIAL (ins)	*2.76*	*4.17*	*0.63*	*0.12*	*1.22*	*1.22*	*0.26*	*1.77*
1048/002	**Back-plate**				**Weight 160g/5.7oz**			

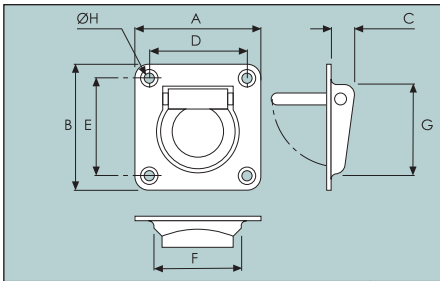

LASHING RING

Pressed steel pan with a forged steel ring.
Zinc plated finish.
500kg S.W.L.

	A	B	C	D	E	F	G	H
1057/001					**Weight 370g/13.1oz**			
METRIC (mm)	*95*	*101*	*22*	*73*	*79*	*63*	*70*	*7*
IMPERIAL (ins)	*3.74*	*3.98*	*0.87*	*2.87*	*3.11*	*2.48*	*2.76*	*0.28*

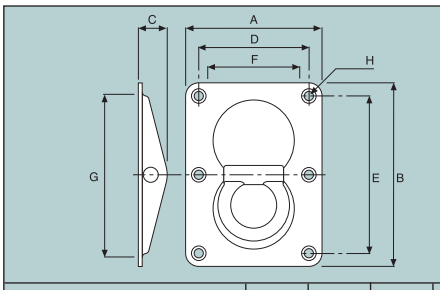

LASHING RING

Pressed steel pan with a forged steel ring.
Galvanised finish.
1000kg S.W.L.

	A	B	C	D	E	F	G	H
1057/013					**Weight 538g/1.2lb**			
METRIC (mm)	*108*	*146*	*23.8*	*88.9*	*127*	*68.8*	*123*	*7.15*
IMPERIAL (ins)	*4.25*	*5.75*	*0.94*	*3.50*	*5.00*	*2.71*	*4.84*	*0.28*

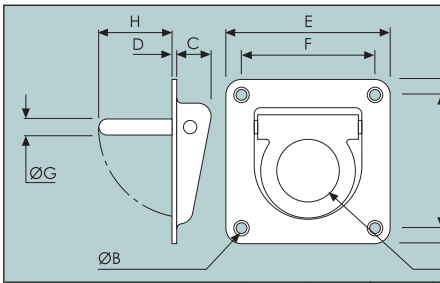

LASHING RING

Pressed steel pan with a forged steel ring.
500kg S.W.L.
* Spring loaded ring.

	A	B	C	D	E	F	G	H
1057/011	**Zinc Plated**				**Weight 470g/1.04lb**			
1057/0115	**304 Stainless Steel***				**Weight 420g/14.8oz**			
METRIC (mm)	*41*	*6.8*	*21*	*3*	*105*	*85*	*11*	*49*
IMPERIAL (ins)	*1.62*	*0.27*	*0.83*	*0.12*	*4.13*	*3.35*	*0.43*	*1.93*

Lashing Rings

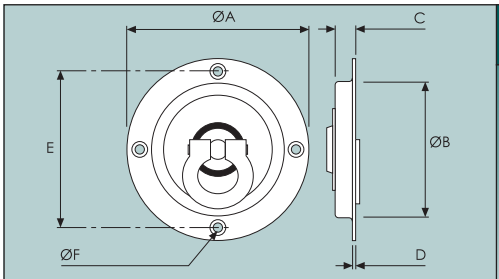

PIVOTAL LASHING RING.

Galvanised, forged steel, swivel-ring assembly.
Zinc-plated, pressed steel dish & seal plate.
Supplied with a rubber gasket.
2 tonne S.W.L.

	A	B	C	D	E	F	G	H
1057/007					**Weight 800g/1.8oz**			
METRIC (mm)	*178*	*132*	*19*	*1.7*	*158*	*7*		
IMPERIAL (ins)	*7*	*5.2*	*0.75*	*0.07*	*6.22*	*0.28*		

1. Weld pivotal ring sub-assembly to trailer cross-member, weld must be totally around the retainer dish.
2. Routter hole in timber floor to suit pan and pivotal ring.
3. Fit rubber seal over ring, then place pan over ring and fit rubber seal into hole in the pan.
4. Screw pan to floor.
5. Place seal-plates around ring, covering rubber seal and tack-weld at 4 equal positions around outside diameter of seal-plate

FITTING INSTRUCTIONS

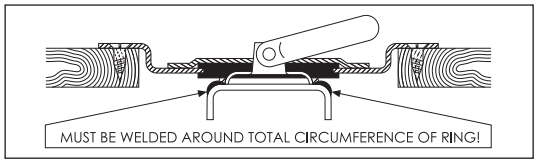

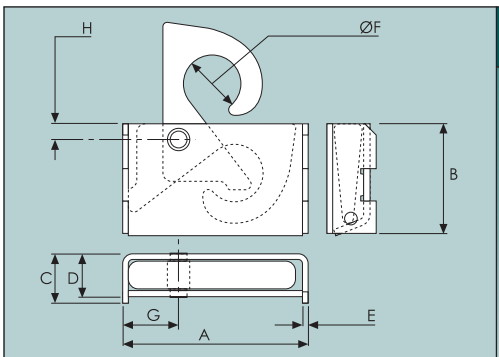

UNDER-FLOOR LASHING RING

Self-colour, mild-steel case with a zinc plated, forged-steel hook.
4000kg S.W.L.

	A	B	C	D	E	F	G	H
1061/001					**Weight 1.33kg/2.9lb**			
METRIC (mm)	*132*	*78*	*35*	*30.5*	*4*	*39*	*42*	*14*
IMPERIAL (ins)	*5.20*	*3.07*	*1.38*	*1.20*	*0.16*	*1.54*	*1.65*	*0.55*

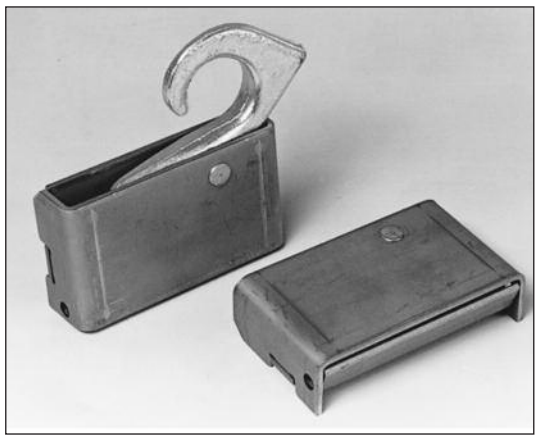

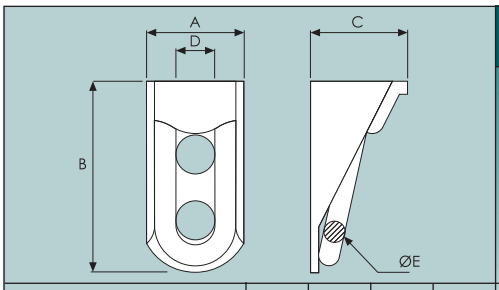

FLOOR LASHING RING

Drop forged, galvanised ring with fabricated, self-colour steel bracket.
Ring is stored below floor level when not in use.
2500kg S.W.L.

	A	B	C	D	E	F	G	H
1058/001					**Weight 920g/2lb**			
METRIC (mm)	*65*	*115*	*66*	*25*	*14*			
IMPERIAL (ins)	*2.56*	*4.53*	*2.6*	*0.98*	*0.55*			

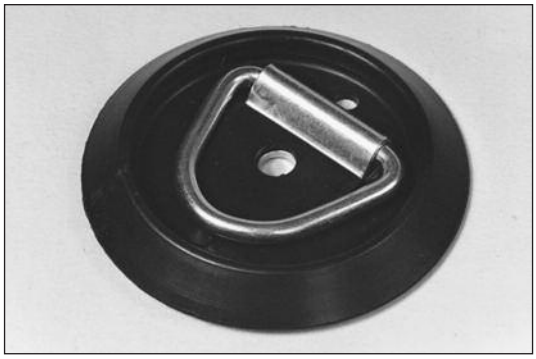

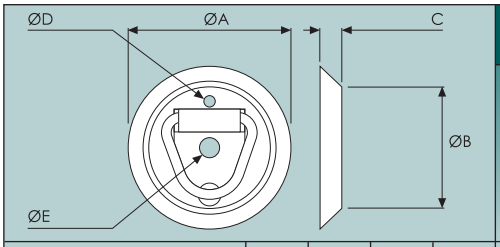

TIE-DOWN RING

Zinc plated ring and cleat with a black, polypropylene circular base.
362kg S.W.L.

	A	B	C	D	E	F	G	H
5589/515					**Weight 100g/3.5oz**			
METRIC (mm)	*104*	*73*	*12.7*	*6.5*	*11*			
IMPERIAL (ins)	*4.10*	*2.87*	*0.50*	*0.26*	*0.43*			

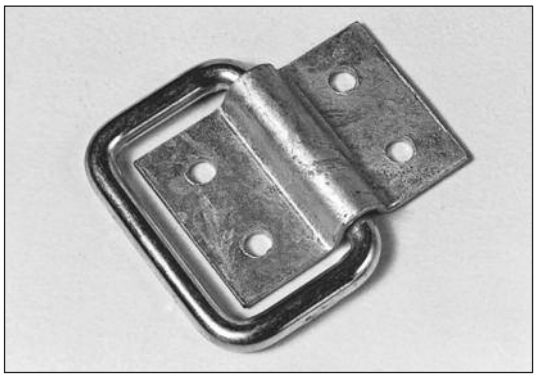

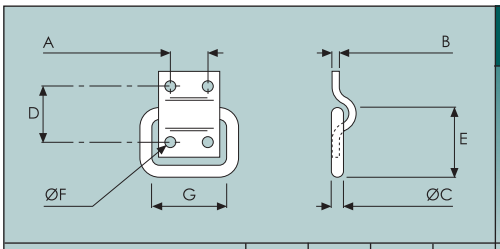

LASHING RING & CLEAT

Zinc plated ring with a galvanised cleat.

	A	B	C	D	E	F	G	H
1049/003	**Cleat**				**Weight 40g/1.4oz**			
1049/004	**Ring**				**Weight 40g/1.4oz**			
METRIC (mm)	*19*	*2*	*6.5*	*33*	*41*	*5*	*44*	
IMPERIAL (ins)	*0.75*	*0.08*	*0.26*	*1.30*	*1.61*	*0.2*	*1.73*	

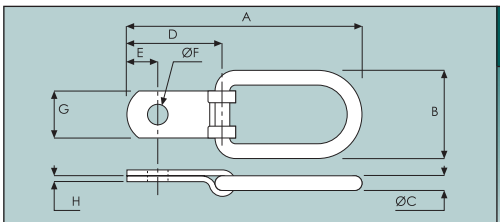

LIGHTWEIGHT LASHING RING

Zinc plated, mild steel.

	A	B	C	D	E	F	G	H
1062/001					**Weight 30g/1.1oz**			
METRIC (mm)	*79.0*	*30.0*	*5.0*	*32.0*	*10.5*	*7.0*	*16.0*	*2.0*
IMPERIAL (ins)	*3.11*	*1.18*	*0.20*	*1.26*	*0.41*	*0.28*	*0.63*	*0.08*

Twist Locks

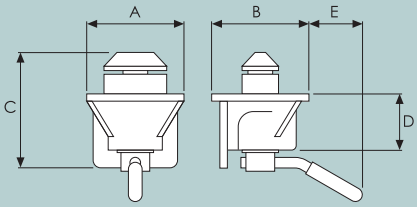

CENTAUR RETRACTABLE TWIST-LOCK

Cast steel body with a forged steel stem.
For use with standard type ISO 1161 corner castings.

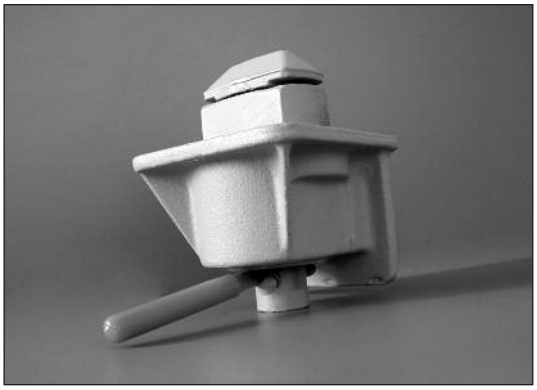

	A	B	C	D	E	F	G	H
5565/001					**Weight 6.9kg/15lb**			
METRIC (mm)	*150*	*150*	*183*	*88*	*85*			
IMPERIAL (ins)	*5.91*	*5.91*	*7.21*	*3.47*	*3.35*			

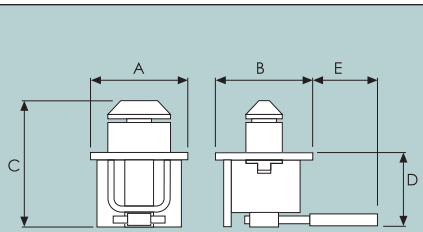

LIGHT-WEIGHT TWIST-LOCK

Fabricated body with a forged steel stem. For use with standard type ISO 1161 corner castings.

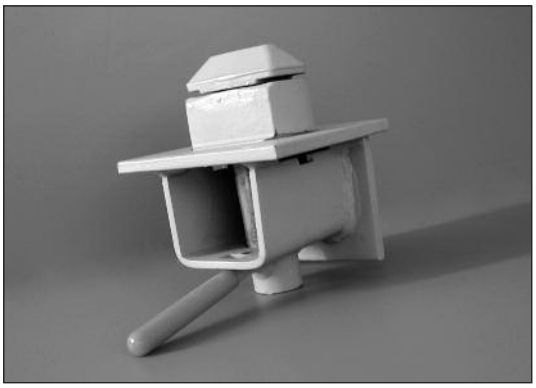

	A	B	C	D	E	F	G	H
5563/001					**Weight 6.9kg/15lb**			
METRIC (mm)	*150*	*150*	*176*	*94*	*100*			
IMPERIAL (ins)	*5.91*	*5.91*	*6.93*	*3.70*	*3.94*			

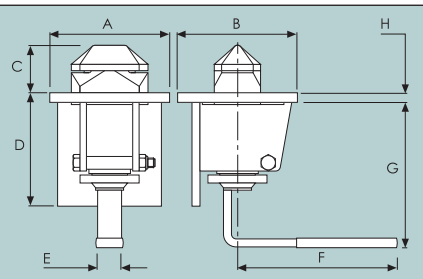

RETRACTABLE TWIST LOCK

Fabricated steel body with a forged steel stem.
Self colour finish.
For use with standard ISO 1161 corner castings.

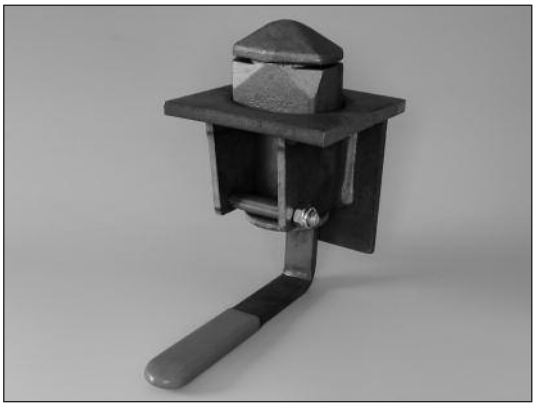

	A	B	C	D	E	F	G	H
5561/002					**Weight 8.7kg/19.2lb**			
METRIC (mm)	*150*	*150*	*62*	*140*	*30*	*180*	*180*	*12*
IMPERIAL (ins)	*5.91*	*5.91*	*2.44*	*5.51*	*1.18*	*7.09*	*7.09*	*0.47*

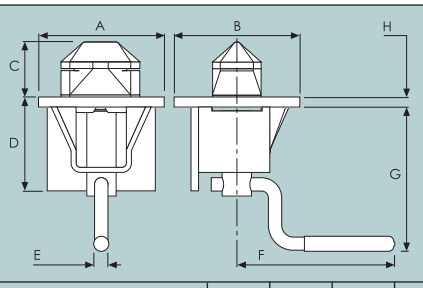

RETRACTABLE TWIST LOCK

Fabricated steel body with a forged steel stem.
Self colour finish.
For use with standard ISO 1161 corner castings.

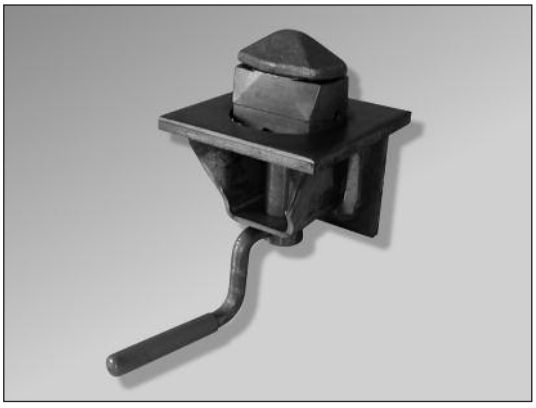

	A	B	C	D	E	F	G	H
5561/003					**Weight 6.5kg/14.3lb**			
METRIC (mm)	*150*	*150*	*62*	*112*	*15*	*170*	*171*	*12*
IMPERIAL (ins)	*5.91*	*5.91*	*2.44*	*4.41*	*0.59*	*6.69*	*6.73*	*0.47*

5570/002 - RHR/LHR Shown

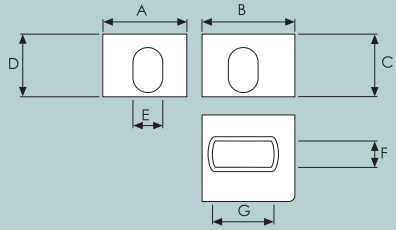

CORNER CASTINGS

Forged steel, standard ISO 1161type.
LHF - Left Hand Front
RHR - Right Hand Rear

	A	B	C	D	E	F	G	H
5570/001	**LHF/RHR - Lower**				**Weight 11.1kg/24.5lb**			
5570/002	**RHF/LHR - Lower**							
5570/004	**LHF/RHR - Upper**							
5570/005	**RHF/LHR - Upper**							
METRIC (mm)	*160*	*178*	*118*	*79.0*	*50.8*	*63.0*	*124*	
IMPERIAL (ins)	*6.30*	*7.00*	*4.65*	*3.11*	*2.00*	*2.48*	*4.88*	

Corner Castings

Notes

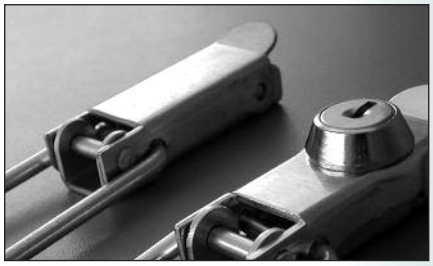

cab &
body fittings

BANSBACH GAS SPRINGS b1-b10
BANSBACH ELECTRONIC DAMPERS b10
BANSBACH LINEAR MOTION b11
TELESCOPIC STAYS b12
ACCURIDE TELESCOPIC SLIDES b13-b30
OJOP OVERCENTRE FASTENERS b31-b34
OVERCENTRE FASTENERS b35-b36
GRAVELLY FASTENERS b37
BONNET FASTENERS b38-b39
HASP & STAPLES b40
FLOOR TRAP FASTENERS b41
TIP-UP SEAT FITTINGS b41
COAT HOOKS b42
ASHTRAYS b42
STEPS b43-b44
ANTI SLIP TAPE b44
VENTILATORS b45-b52
MIRRORS b53
MARKER BOARDS b54-b55
NUMBER PLATE HOLDER b55
LICENCE HOLDERS b56
RUBBER BUFFERS b57-b64
RUBBER MATTING b64
FENDER STRIP b65
FUEL FILLER FLAPS b66
FIRST AID KITS b67
EMERGENCY HAMMER b67
FIRE EXTINGUISHERS b68-b69
FIRE EXTINGUISHER BOXES b69
TOOL BOXES b70-b71
HAND WASH UNITS b72-73
REVERSING ALARMS b74
REVERSING CAMERA b75
INVERTER b76
BATTERY CONNECTORS b77
WHEEL CHOCKS b78-b79

section

b

CAB & BODY FITTINGS

Bansbach: Gas Springs

Easylift Gas Springs

Over 25 years of experience supplying a diverse range of gas springs means that Bansbach enjoys an envious reputation. Their experience and efficient manufacturing is recognised and appreciated by many companies, not only in Europe, but through-out the World.

By the use of modern, environmentally compatible, high-capacity manufacturing systems and optimised production processes, they are able to provide rapid deliveries, exceptional durability and a high degree of flexibility.

Stringent inspection procedures and technical expertise acquired over many years ensures the quality and dependability of the end products.

Our long association with Bansbach has given us many years experience which enables us to respond quickly and positively to your needs, giving advice and assistance, thus, helping you to determine which gas spring is most suited to your particular application.

Should it prove impossible to match your specification from our extensive stock range, Bansbach can manufacture to most specifications and, due to their speedy production, we can offer an exceptional delivery service.

compression

lockable

traction

stainless

dampers

CeramPro® technology

The CeramPro® surface treatment is a new innovative development out of the Bansbach development laboratory. CeramPro® offers maximum rust and corrosion resistance of the piston rod. This special surface treatment provides an extremely smooth surface with excellent operating characteristics that provide superior protection against rod abrasion.

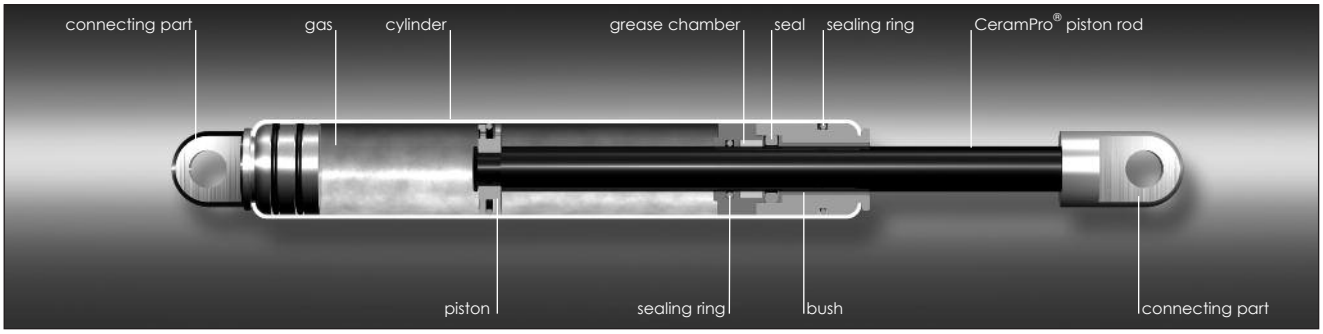

Bansbach: Gas Springs

INSTALLATION CALCULATION FOR AN 'EASY-LIFT' GAS SPRING

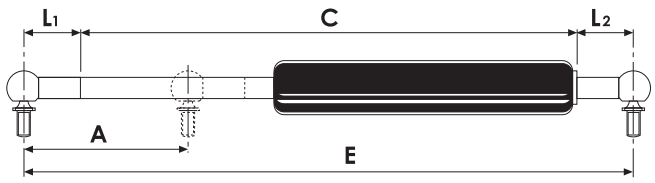

YOU WILL REQUIRE THE FOLLOWING DATA TO ENSURE CORRECT SELECTION OF THE 'EASY-LIFT' GAS SPRING:

* *STROKE 'A' (mm)*
* *THE EXTENDED LENGTH 'E' (mm)*
* *THE THRUST FORCE 'F1' (Newtons)*
* *THE END CONNECTION METHODS*
* *ESTABLISH LENGTH OF FLAP 'D' (mm)*

ESTABLISHING THRUST FORCE F1 (N)

$$F1 = \frac{G \times L}{B \times X} + K$$

S = CENTRE OF GRAVITY
G = WEIGHT OF FLAP IN NEWTON (kg x 10)
B = POWER ARM - corresponds to about 85% of required stroke 'A' (mm).
L = DIMENSION FROM HINGE TO CENTRE OF GRAVITY - taking into consideration any uneven distribution of weight, i.e. locks, handles, end - cappings, etc.
X = NUMBER OF SPRINGS - generally 2 , one each side of flap.
K = SAFETY FACTOR; F1 = UP TO 300N, ADD 10% (x 1.1)
F1 = OVER 300N, ADD 50N ONLY.

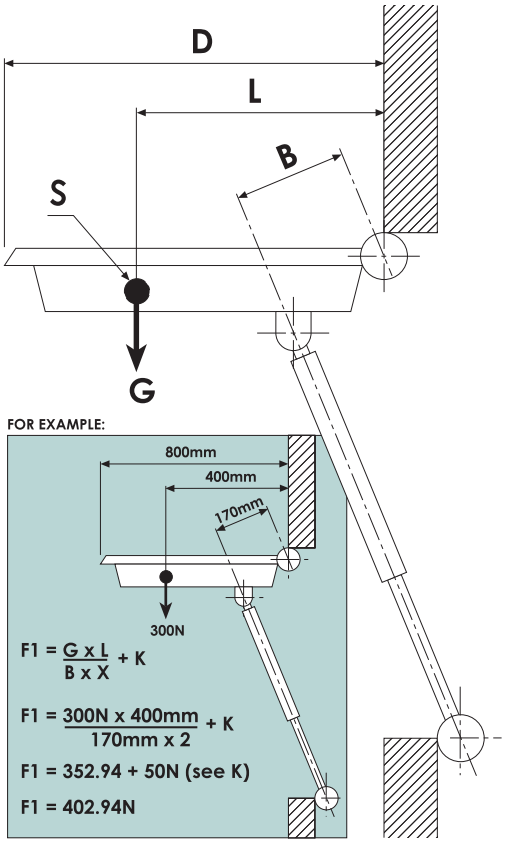

Note
Should you require assistance, please contact us. We are always prepared to give advice and help to determine which gas spring is suitable. We recommend that a sketch of your application is made available to us, providing as much information as possible. (See calculation example.)

OTHER OPTIONS TO CONSIDER WHEN CHOOSING AN 'EASY-LIFT' GAS SPRING

SPRING POWER

The theoretical extension force results from the filling pressure x the cross-sectional area of the piston rod. Through variation of both factors it is possible to supply Bansbach gas springs with any desired extension force. Our standard models are made from 50N to 5000N.
The extension force quoted is always related to the value of F1 measured at 20° ± 2°C with the piston in the downward position.

F1 = Extension force by extended piston rod.

F2 = Extension force by drawn-in piston rod.

F3 = Insertion force by extended piston rod.

F4 = Insertion force by drawn-in piston rod.

FR = Friction force.

These values may be influenced through the gas volume, the oil quantity and through the quality of the guiding piece. Bansbach gas springs excel through their low friction and even increase of pressure. Through the combination of different nozzle borings and oil quantity, it is possible to control the push-out and push-in speed nearly at will.

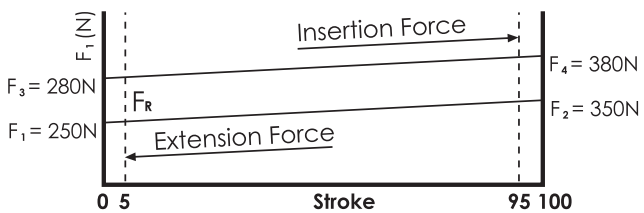

DAMPING

During manufacture, the damping can be varied to alter the speed at which the piston extends, or, to slow the piston as it approaches full extension. The different types are listed below:

0. Fast push-out and push-in speed, no damping action at the end of the travel.
1. Fast push-out and push-in speed, normal damping action at the end of the travel.
2. Fast push-out and push-in speed, strong damping at the end of the travel.
3. Normal push-out and push-in speed, no damping action at the end of the travel.
4. Normal push-out and push-in speed, normal damping action at the end of the travel.
5. Normal push-out and push-in speed, strong damping action at the end of the travel.
6. Slow push-out and push-in speed, no damping action at the end of the travel.
7. Slow push-out and push-in speed, normal damping action at the end of the travel.
8. Slow push-out and push-in speed, strong damping action at the end of the travel.

MANUFACTURING DIMENSIONAL CAPACITIES

PISTON Ø-CYLINDER Ø	6-15mm	8-19mm	8-22mm	10-22mm	10-28mm	12-28mm	14-28mm	20-40mm
PUSH-OUT FORCES	10-400N	30-700N	30-700N	50-1300N	50-1300N	100-1700N	150-2600N	200-5000N
STROKE LENGTHS	10-150mm	10-300mm	10-300mm	20-800mm	20-800mm	20-1000mm	20-1000mm	20-1000mm

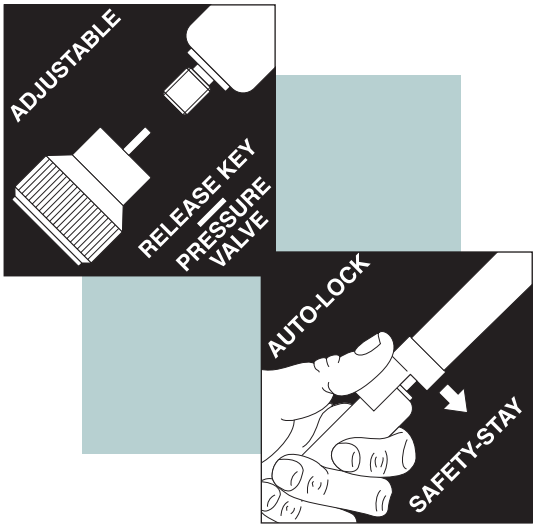

PRESSURE RELEASE VALVE

Most standard type gas springs can be supplied with a release valve to enable the pressure to be released on site by means of a screw-in release key, which is particularly useful when trying samples on new applications. These can, if necessary, be re-pressurised by means of specialist equipment. Further details available on request.

AUTO-LOCK, SAFETY STAY

The 'Auto-lock, safety stay has a spring-action which automatically locks a gas spring in the extended position, thus, eliminating the need for an additional safety stay on applications where rigid locking of the flap is necessary. A simple press-action is all that is required to release the stay.

• ASSEMBLIES • ASSEMBLIES • ASSEMBLIES • ASSEMBLIES • ASSEMBLIES • ASSEMBLIES • ASSEMBLIES • ASSEMBLIES •

Ø6 mm PISTON, Ø15 mm CYLINDER
Pressure range = 10N to 400N

The complete assemblies listed are with the most popular end fittings. Alternatively, any combination of the end fittings shown can be supplied, but it is important to note that this will alter the overall length of the assembly. The extended length can be determined by adding the lengths of the fittings (Dims. L1 and L2) to the length of the base unit (Dim. C).

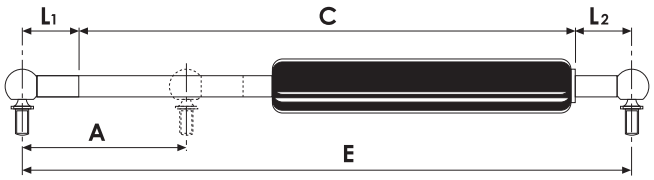

STROKE (A)	FIXING CENTRES (E)	F1 (NEWTONS)	COMPLETE ASSEMBLY NUMBER	COMPONENT REFERENCE			
				END FITTINGS		BASE UNIT NUMBER	BASE LENGTH (C)
				EYE-EYE	ELBOW-ELBOW		
60 mm	182 mm	30	**1240/7301**	1251/30		1260/7152	150 mm
60 mm	194 mm	30	**1240/7303**		1252/48		
100 mm	298 mm	100	**1240/7321**	1251/30		1260/7154	266 mm
100 mm	310 mm	100	**1240/7323**		1252/48		
100 mm	298 mm	180	**1240/7341**	1251/30		1260/7156	266 mm
100 mm	310 mm	180	**1240/7343**		1252/48		

END FITTINGS

The internal thread of each end fitting matches that of the base unit, ie. M5.

1251/30 - ALUM'M

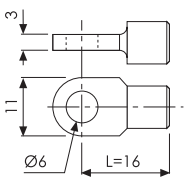

1251/32 - ALUM'M

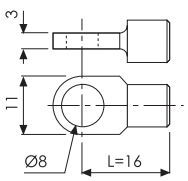

1253/58 - STEEL

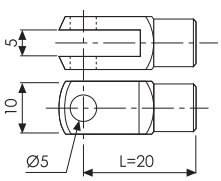

1252/48 - STEEL

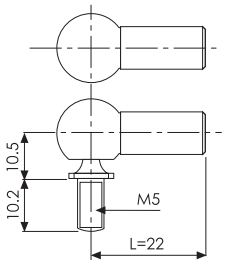

1252/50 - STEEL

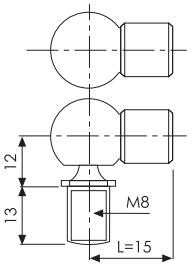

Walsall: 01922 471000 Heywood: 01706 692110 Romsey: 01794 525870 www.albert-jagger.co.uk

Bansbach: Gas Springs

• ASSEMBLIES • ASSEMBLIES • ASSEMBLIES • ASSEMBLIES • ASSEMBLIES • ASSEMBLIES • ASSEMBLIES • ASSEMBLIES •

Ø8 mm PISTON, Ø19 mm CYLINDER
Pressure range = 30N to 700N

The complete assemblies listed are with the most popular end fittings. Alternatively, any combination of the end fittings shown can be supplied, but it is important to note that this will alter the overall length of the assembly. The extended length can be determined by adding the lengths of the fittings (Dims. L1 and L2) to the length of the base unit (Dim. C).

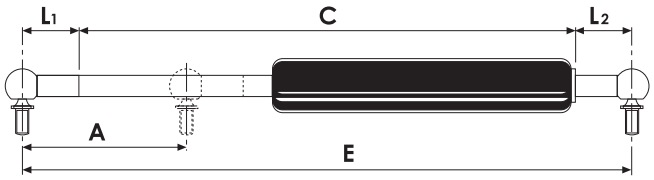

STROKE (A)	FIXING CENTRES (E)	F1 (NEWTONS)	COMPLETE ASSEMBLY NUMBER	COMPONENT REFERENCE			
				END FITTINGS		BASE UNIT NUMBER	BASE LENGTH (C)
				EYE-EYE	ELBOW-ELBOW		
65 mm	245 mm	250	**1245/7361**	1251/02		1260/7160	205 mm
65 mm	265 mm	250	**1245/7363**		1252/54		
80 mm	239 mm	120	**1245/7381**	1251/02		1260/7162	199 mm
80 mm	259 mm	120	**1245/7383**		1252/54		
95 mm	275 mm	350	**1245/7401**	1251/02		1260/7164	235 mm
95 mm	295 mm	350	**1245/7403**		1252/54		
100 mm	290 mm	150	**1245/7421**	1251/02		1260/7166	250 mm
100 mm	310 mm	150	**1245/7423**		1252/54		
100 mm	290 mm	200	**1245/7441**	1251/02		1260/7168	250 mm
100 mm	310 mm	200	**1245/7443**		1252/54		
100 mm	290 mm	400	**1245/7461**	1251/02		1260/7170	250 mm
100 mm	310 mm	400	**1245/7463**		1252/54		
100 mm	290 mm	500	**1245/7481**	1251/02		1260/7172	250 mm
100 mm	310 mm	500	**1245/7483**		1252/54		
100 mm	290 mm	600	**1245/7501**	1251/02		1260/7174	250 mm
100 mm	310 mm	600	**1245/7503**		1252/54		
100 mm	320 mm	200	**1245/7521**	1251/02		1260/7176	280 mm
100 mm	340 mm	200	**1245/7523**		1252/54		
100 mm	320 mm	300	**1245/7541**	1251/02		1260/7178	280 mm
100 mm	340 mm	300	**1245/7543**		1252/54		
100 mm	320 mm	500	**1245/7561**	1251/02		1260/7180	280 mm
100 mm	340 mm	500	**1245/7563**		1252/54		
100 mm	320 mm	600	**1245/7581**	1251/02		1260/7182	280 mm
100 mm	340 mm	600	**1245/7583**		1252/54		
100 mm	370 mm	370	**1245/7601**	1251/02		1260/7184	330 mm
100 mm	390 mm	370	**1245/7603**		1252/54		
150 mm	390 mm	400	**1245/7621**	1251/02		1260/7186	350 mm
150 mm	410 mm	400	**1245/7623**		1252/54		
150 mm	400 mm	250	**1245/7641**	1251/02		1260/7188	360 mm
150 mm	420 mm	250	**1245/7643**		1252/54		
150 mm	400 mm	350	**1245/7661**	1251/02		1260/7190	360 mm
150 mm	420 mm	350	**1245/7663**		1252/54		
150 mm	400 mm	400	**1245/7681**	1251/02		1260/7192	360 mm
150 mm	420 mm	400	**1245/7683**		1252/54		
150 mm	400 mm	550	**1245/7701**	1251/02		1260/7194	360 mm
150 mm	420 mm	550	**1245/7703**		1252/54		
150 mm	420 mm	200	**1245/7721**	1251/02		1260/7196	380 mm
150 mm	440 mm	200	**1245/7723**		1252/54		
150 mm	420 mm	600	**1245/7741**	1251/02		1260/7198	380 mm
150 mm	440 mm	600	**1245/7743**		1252/54		

continued...

STROKE (A)	FIXING CENTRES (E)	F1 (NEWTONS)	COMPLETE ASSEMBLY NUMBER	COMPONENT REFERENCE			
				END FITTINGS		BASE UNIT NUMBER	BASE LENGTH (C)
				EYE-EYE	ELBOW-ELBOW		
200 mm	500 mm	50	1245/7761	1251/02		1260/7200	460 mm
200 mm	520 mm	50	1245/7763		1252/54		
200 mm	500 mm	210	1245/7781	1251/02		1260/7202	460 mm
200 mm	520 mm	210	1245/7783		1252/54		
200 mm	500 mm	300	1245/7801	1251/02		1260/7204	460 mm
200 mm	520 mm	300	1245/7803		1252/54		
200 mm	500 mm	450	1245/7821	1251/02		1260/7206	460 mm
200 mm	520 mm	450	1245/7823		1252/54		
200 mm	500 mm	600	1245/7841	1251/02		1260/7208	460 mm
200 mm	520 mm	600	1245/7843		1252/54		
200 mm	500 mm	220	1245/7861	1251/02		1260/7210	460 mm
200 mm	520 mm	220	1245/7863		1252/54		
200 mm	500 mm	270	1245/7881	1251/02		1260/7212	460 mm
200 mm	520 mm	270	1245/7883		1252/54		
200 mm	520 mm	300	1245/7901	1251/02		1260/7214	480 mm
200 mm	540 mm	300	1245/7903		1252/54		
200 mm	520 mm	600	1245/7921	1251/02		1260/7216	480 mm
200 mm	540 mm	600	1245/7923		1252/54		
250 mm	580 mm	500	1245/7941	1251/02		1260/7218	540 mm
250 mm	600 mm	500	1245/7943		1252/54		
250 mm	600 mm	100	1245/7961	1251/02		1260/7220	560 mm
250 mm	620 mm	100	1245/7963		1252/54		
250 mm	600 mm	200	1245/7981	1251/02		1260/7222	560 mm
250 mm	620 mm	200	1245/7983		1252/54		
250 mm	600 mm	300	1245/8001	1251/02		1260/7224	560 mm
250 mm	620 mm	300	1245/8003		1252/54		
250 mm	600 mm	400	1245/8021	1251/02		1260/7226	560 mm
250 mm	620 mm	400	1245/8023		1252/54		
250 mm	600 mm	500	1245/8041	1251/02		1260/7228	560 mm
250 mm	620 mm	500	1245/8043		1252/54		

END FITTINGS

1251/04 - ALUM'M

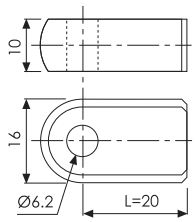

1251/02 - ALUM'M

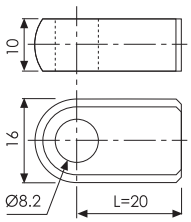

1251/06 - ALUM,M

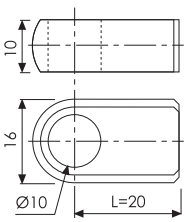

1256/66 - STEEL

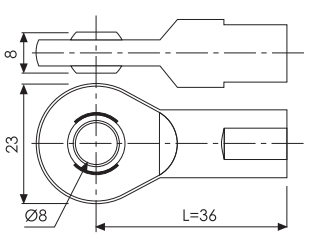

1253/60 - STEEL

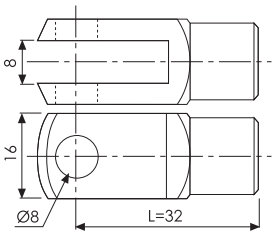

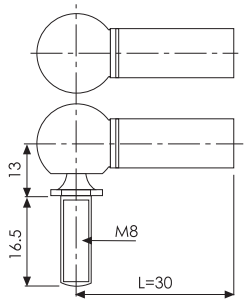

1252/54 - STEEL

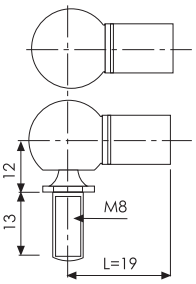

1252/52 - STEEL

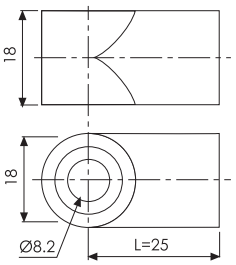

1251/14 - DIE-CAST

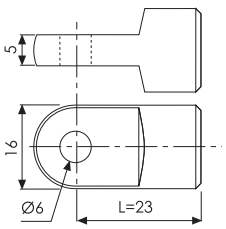

1251/24 - ALUM'M

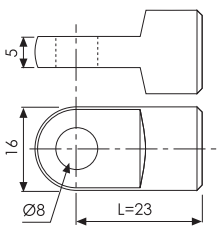

1251/26 - ALUM'M

Bansbach: Gas Springs

• ASSEMBLIES • ASSEMBLIES • ASSEMBLIES • ASSEMBLIES • ASSEMBLIES • ASSEMBLIES • ASSEMBLIES • ASSEMBLIES •

Ø10 mm PISTON, Ø22 mm CYLINDER
Pressure range = 50N to 1300N

The complete assemblies listed are with the most popular end fittings. Alternatively, any combination of the end fittings shown can be supplied, but it is important to note that this will alter the overall length of the assembly. The extended length can be determined by adding the lengths of the fittings (Dims. L1 and L2) to the length of the base unit (Dim. C).

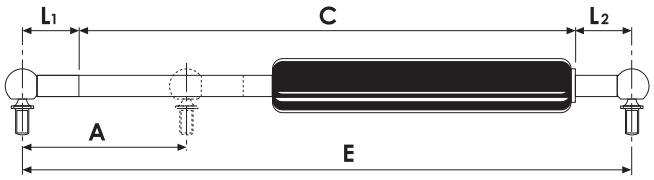

STROKE (A)	FIXING CENTRES (E)	F1 (NEWTONS)	COMPLETE ASSEMBLY NUMBER	COMPONENT REFERENCE			
				END FITTINGS		BASE UNIT NUMBER	BASE LENGTH (C)
				EYE-EYE	ELBOW-ELBOW		
195 mm	490 mm	850	**1247/8061**	1251/02		1260/7236	450 mm
195 mm	510 mm	850	**1247/8063**		1252/54		
200 mm	500 mm	500	**1247/8081**	1251/02		1260/7238	460 mm
200 mm	520 mm	500	**1247/8083**		1252/54		
200 mm	500 mm	600	**1247/8101**	1251/02		1260/7240	460 mm
200 mm	520 mm	600	**1247/8103**		1252/54		
200 mm	500 mm	700	**1247/8121**	1251/02		1260/7242	460 mm
200 mm	520 mm	700	**1247/8123**		1252/54		
200 mm	500 mm	800	**1247/8141**	1251/02		1260/7244	460 mm
200 mm	520 mm	800	**1247/8143**		1252/54		
200 mm	500 mm	1000	**1247/8161**	1251/02		1260/7246	460 mm
200 mm	520 mm	1000	**1247/8163**		1252/54		
200 mm	500 mm	1200	**1247/8181**	1251/02		1260/7248	460 mm
200 mm	520 mm	1200	**1247/8183**		1252/54		
200 mm	519 mm	900	**1247/8201**	1251/02		1260/7250	479 mm
200 mm	539 mm	900	**1247/8203**		1252/54		
300 mm	700 mm	800	**1247/8221**	1251/02		1260/7252	660 mm
300 mm	720 mm	800	**1247/8223**		1252/54		
300 mm	750 mm	600	**1247/8241**	1251/02		1260/7254	710 mm
300 mm	770 mm	600	**1247/8243**		1252/54		
350 mm	800 mm	600	**1247/8261**	1251/02		1260/7256	760 mm
350 mm	820 mm	600	**1247/8263**		1252/54		
350 mm	800 mm	800	**1247/8281**	1251/02		1260/7258	760 mm
350 mm	820 mm	800	**1247/8283**		1252/54		
350 mm	800 mm	1000	**1247/8291**	1251/02		1260/7259	760 mm
350 mm	820 mm	1000	**1247/8293**		1252/54		
400 mm	900 mm	250	**1247/8301**	1251/02		1260/7260	860 mm
400 mm	920 mm	250	**1247/8303**		1252/54		

END FITTINGS

See page b5 for complete listing.

• ASSEMBLIES • ASSEMBLIES • ASSEMBLIES • ASSEMBLIES • ASSEMBLIES • ASSEMBLIES • ASSEMBLIES • ASSEMBLIES •

1249: Ø12 mm PISTON, Ø28 mm CYLINDER
Pressure range = 100N to 1700N
1250: Ø14 mm PISTON, Ø28 mm CYLINDER
Pressure range = 150N to 2600N

The complete assemblies listed are with the most popular end fittings. Alternatively, any combination of the end fittings shown can be supplied, but it is important to note that this will alter the overall length of the assembly. The extended length can be determined by adding the lengths of the fittings (Dims. L1 and L2) to the length of the base unit (Dim. C).

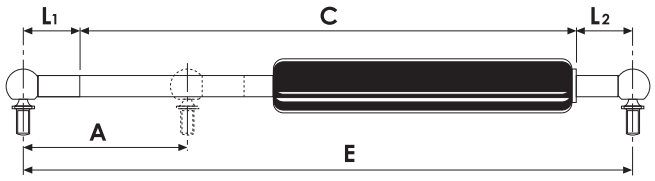

STROKE (A)	FIXING CENTRES (E)	F1 (NEWTONS)	COMPLETE ASSEMBLY NUMBER	COMPONENT REFERENCE			
				END FITTINGS		BASE UNIT NUMBER	BASE LENGTH (C)
				EYE-EYE	ELBOW-ELBOW		
300 mm	750 mm	400	**1249/8321**	1251/34		1260/7268	700 mm
300 mm	770 mm	400	**1249/8323**		1252/56		
460 mm	1040 mm	800	**1249/8341**	1251/34		1260/7270	990 mm
460 mm	1060 mm	800	**1249/8343**		1252/56		
500 mm	1100 mm	1200	**1249/8361**	1251/34		1260/7272	1050 mm
500 mm	1120 mm	1200	**1249/8363**		1252/56		
100 mm	315 mm	1800	**1250/8361**	1251/34		1260/7276	265 mm
100 mm	335 mm	1800	**1250/8363**		1252/56		
100 mm	335 mm	1900	**1250/8371**	1251/34		1260/7277	285 mm
100 mm	355 mm	1900	**1250/8373**		1252/56		
100 mm	400 mm	2100	**1250/8381**	1251/34		1260/7278	350 mm
100 mm	420 mm	2100	**1250/8383**		1252/56		
200 mm	530 mm	1800	**1250/8401**	1251/34		1260/7280	480 mm
200 mm	550 mm	1800	**1250/8403**		1252/56		
250 mm	600 mm	1500	**1250/8421**	1251/34		1260/7282	550 mm
250 mm	620 mm	1500	**1250/8423**		1252/56		
300 mm	730 mm	1200	**1250/8441**	1251/34		1260/7284	680 mm
300 mm	750 mm	1200	**1250/8443**		1252/56		
500 mm	1115 mm	1000	**1250/8461**	1251/34		1260/7286	1065 mm
500 mm	1135 mm	1000	**1250/8463**		1252/56		
500 mm	1115 mm	2000	**1250/8481**	1251/34		1260/7288	1065 mm
500 mm	1135 mm	2000	**1250/8483**		1252/56		
500 mm	1115 mm	2500	**1250/8501**	1251/34		1260/7290	1065 mm
500 mm	1135 mm	2500	**1250/8503**		1252/56		

END FITTINGS

The internal thread of each end fitting matches that of the base unit, ie. M10.

1251/34 - ALUM'M

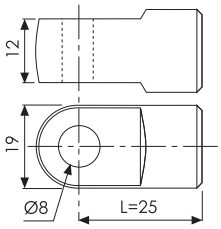

1251/44 - ALUM'M

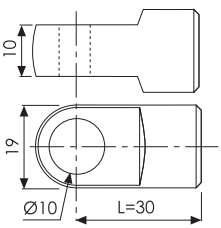

1252/56 - STEEL

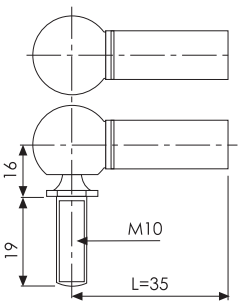

1256/68 - STEEL

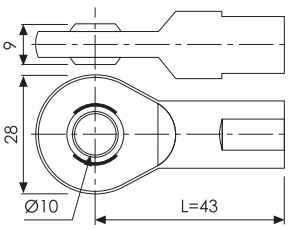

1253/62 - STEEL

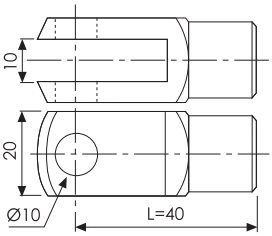

Bansbach: Gas Springs

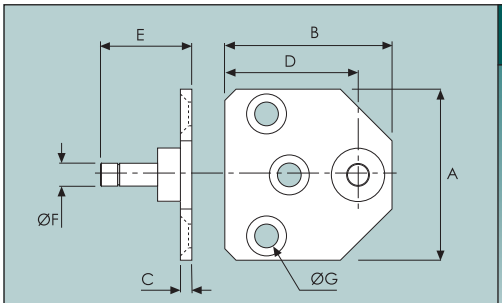

ATTACHMENT BRACKET

Ø7.8mm shaft on a flat plate.
Zinc plated, mild steel.

	A	B	C	D	E	F	G	H
1258/01					**Weight 60g/2.1oz**			
METRIC (mm)	*45.0*	*44.0*	*3.00*	*35.0*	*31.0*	*7.80*	*6.20*	
IMPERIAL (ins)	*1.77*	*1.73*	*0.12*	*1.38*	*1.22*	*0.31*	*0.24*	
1258/021	**Ø8mm Push fit fixing cap**							

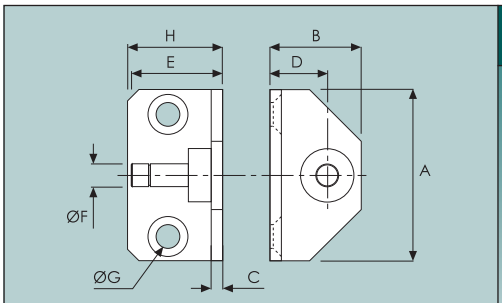

ATTACHMENT BRACKET

Ø7.8mm shaft on an angled plate.
Zinc plated, mild steel.
Supplied with 8mm push fit fixing cap.

	A	B	C	D	E	F	G	H
1258/02					**Weight 53g/1.9oz**			
METRIC (mm)	*45.0*	*24.0*	*3.00*	*15.0*	*24.0*	*7.80*	*6.20*	*25.0*
IMPERIAL (ins)	*1.77*	*0.95*	*0.12*	*0.59*	*0.95*	*0.31*	*0.24*	*0.98*
1258/021	**Ø8mm Push fit fixing cap**							

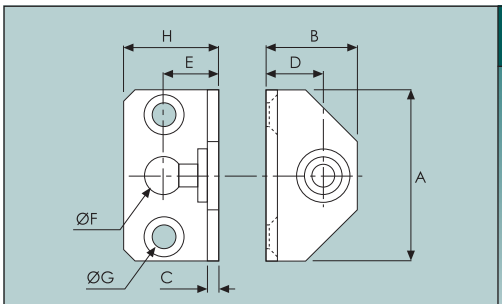

ATTACHMENT BRACKET

Ø10 mm ball on an angled plate.
Zinc plated, mild steel.

	A	B	C	D	E	F	G	H
1258/03					**Weight 48g/1.7oz**			
METRIC (mm)	*45.0*	*24.0*	*3.00*	*14.5*	*14.5*	*10.0*	*6.20*	*25.0*
IMPERIAL (ins)	*1.77*	*0.95*	*0.12*	*0.57*	*0.57*	*0.39*	*0.24*	*0.98*

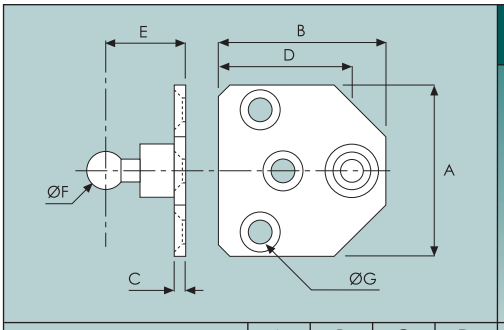

ATTACHMENT BRACKET

Ø10 mm ball on a flat plate.
Zinc plated, mild steel.

	A	B	C	D	E	F	G	H
1258/04					**Weight 54g/1.9oz**			
METRIC (mm)	*45.0*	*44.0*	*3.00*	*35.0*	*21.0*	*10.0*	*6.20*	
IMPERIAL (ins)	*1.77*	*1.73*	*0.12*	*1.38*	*0.83*	*0.39*	*0.24*	

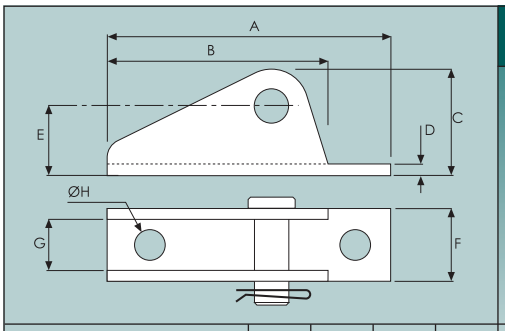

ATTACHMENT BRACKET

304 stainless steel.
Complete with clevis pin & retaining clip.

	A	B	C	D	E	F	G	H
1258/904					**Weight 60g/2.1oz**			
METRIC (mm)	*69.0*	*53.0*	*25.8*	*2.50*	*17.0*	*18.0*	*13.0*	*6.50*
IMPERIAL (ins)	*2.72*	*2.09*	*1.02*	*0.10*	*0.67*	*0.71*	*0.51*	*0.26*

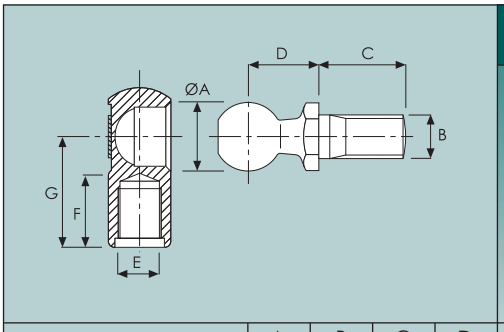

ELBOW JOINT

Black plastic ball socket with spring steel ball retainer.
Zinc plated steel ball & bolt.

	A	B	C	D	E	F	G	H
1258/05	**Ø10mm ball & bolt**				**Weight 12g/0.4oz**			
1252/55	**Ø10 mm ball socket**				**Weight 8g/0.3oz**			
METRIC (mm)	*10.0*	*M8*	*13.0*	*12.0*	*M8*	*9.00*	*18.5*	
IMPERIAL (ins)	*0.39*		*0.51*	*0.47*		*0.35*	*0.73*	

Bansbach: Gas Springs & Dampers

Easylift Lockable Gas Springs

Easylift lockable gas springs can be locked anywhere along the whole stroke. When the release pin is pushed, the piston valve opens allowing gas or oil to flow through the piston which in turn allows free movement of the piston rod along the length of the cylinder. When the piston rod reaches its desired position the release pin is released to close the piston valve and lock the piston rod rigidly in place.

Direction of movement (compression or traction), extension forces, and locking forces are all adjustable during manufacture offering versatile design solutions when designing a diverse range of applications.

An extensive range of actuation solutions are available ranging from standard mechanical levers and bowden wire arrangements to complex hydraulic systems with smooth push button control.

Typical applications include aerospace, industrial, medical, marine, rehabilitation, leisure, furniture as well as commercial vehicle applications.

Visit www.albert-jagger.co.uk for further details or alternatively contact us for an easymotion brochure.

The intelligent damper: easyERF

Electronic adjustable dampers with integrated electrorheological technology.

This new innovative technology from Banbach offers electronically adjustable dampers with reaction times measured in milliseconds. Highly energy efficient with low power consumption (24 volt DC) this is a silent system with no 'laminar flow' or 'whistling' noices and with no moveable valve parts ensures maintenance free operation.

Continuous adjustment of the damping action can be achieved by controling the digital signal via an electronic input signal - either with PWM-standard or with 0 - 4 V analog signal. SPS is possible with specific modifications.

Visit www.albert-jagger.co.uk for further details or alternatively contact us for an easyERF brochure.

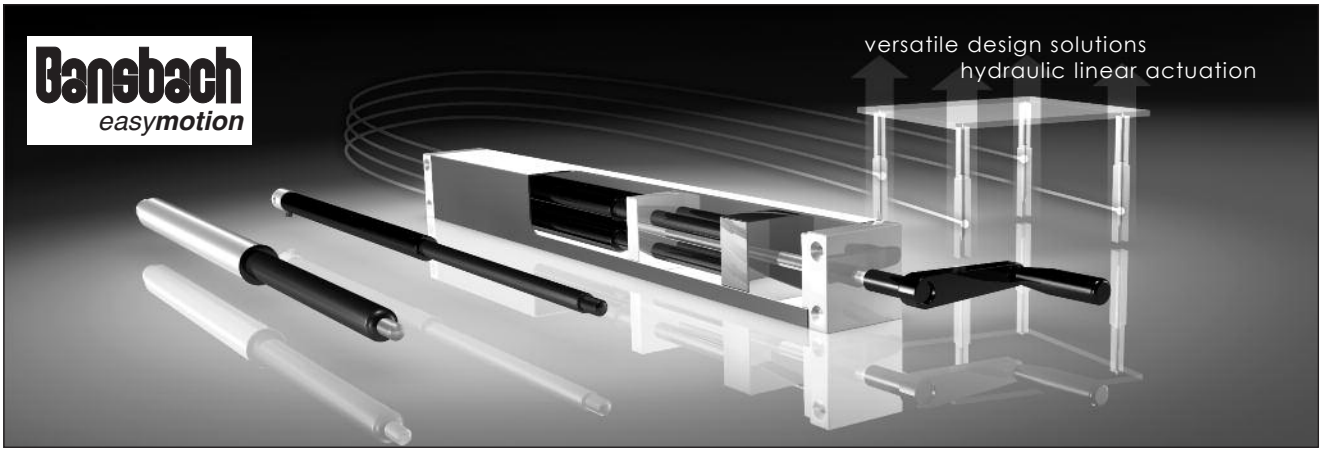

Easymotion - Hydraulic Linear Actuation

An alternative to the linear adjustment with Bansbach gas springs is the Easymotion Hydraulic Linear Actuation system which controls multiple adjustment cylinders synchronously. This is achieved by simoultaneously controlling each cylinder separatly. If light or heavy, easymotion can be fitted on any application and can be customised to fit individual needs - even if on multiple legs. Numerous Bansbach gas spring components are used in the production of the easymotion, guaranteeing quality and reliability.

The easymotion system consists of a hydraulic pump, adjustment cylinders and the tubes for connecting each component. The system can be operated either by a manual crank or by an electrical motor.

The easymotion system offers significant benefits of precise and reliable movement control in a variety of application areas including furniture (workbenches, counters, tables), medical (hospital beds, lab benches) and rehabilitation equipment (massage tables, exercise equipment).

Visit www.albert-jagger.co.uk for further details or alternatively contact us for an easymotion brochure.

furniture

hands free

medical

components

workbench

Bansbach: Linear Motion

Telescopic Stays

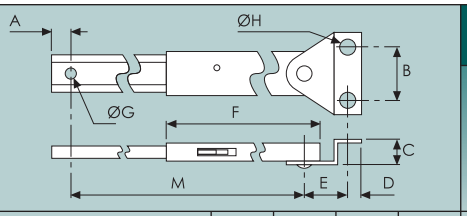

TELESCOPIC LID STAY

Pressed, mild-steel, zinc plated & yellow passivated.
Centres 'M' =
285 mm (11.2") closed
490 mm (19.3") open

	A	B	C	D	E	F	G	H
2522/001					**Weight 300g/10.6oz**			
METRIC (mm)	*13*	*35*	*15*	*9*	*29*	*287*	*6.4*	*8.5*
IMPERIAL (ins)	*0.51*	*1.38*	*0.59*	*0.35*	*1.14*	*11.3*	*0.25*	*0.34*

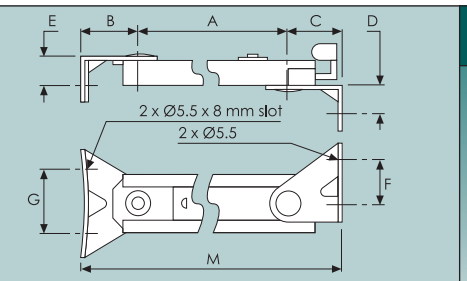

TELESCOPIC LID STAY

Pressed, mild-steel with a zinc plated finish.
Centres 'M' =
326 mm (12.8") closed
525 mm (20.7") open

	A	B	C	D	E	F	G	H
2522/008					**Weight 310g/10.9oz**			
METRIC (mm)	*275*	*24*	*27*	*9*	*13*	*19*	*32*	
IMPERIAL (ins)	*10.8*	*0.95*	*1.10*	*0.35*	*0.52*	*0.75*	*1.26*	

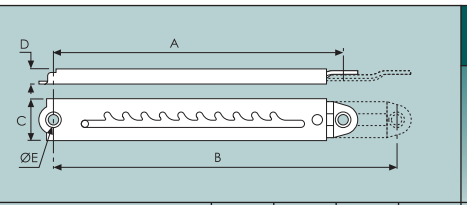

10 POINT ADJUSTABLE STAY

Zinc plated, mild steel with a gold passivated finish.
Automatically locates on extension.
Fully extend in order to release.

	A	B	C	D	E	F	G	H
2522/305					**Weight 300g/10.6oz**			
METRIC (mm)	*214*	*354*	*30.0*	*10.0*	*6.0*			
IMPERIAL (ins)	*8.43*	*13.9*	*1.18*	*0.39*	*0.24*			

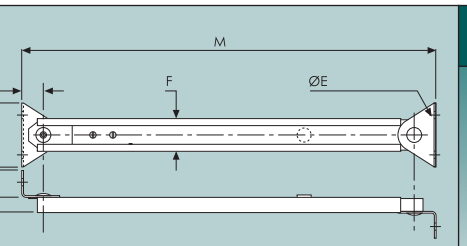

TELESCOPIC LID STAY

304 Stainless steel.
Push button release.
'M' - 350mm Closed
530mm Open

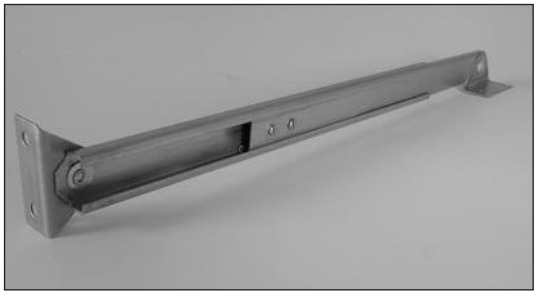

	A	B	C	D	E	F	G	H
2522/500					**Weight 330g/11.6oz**			
METRIC (mm)	*12.0*	*24.0*	*55.0*	*18.0*	*6.00*	*28.0*		
IMPERIAL (ins)	*0.47*	*0.95*	*2.17*	*0.71*	*0.24*	*1.10*		

Accuride Telescopic Slides

Accuride have been at the forefront of design and manufacture of telescopic slides for access and movement systems since 1962. As a result of an enviable partnership with their distributor network and closely monitoring customer feedback Accuride offer an innovative new product development process resulting in a comprehensive range of off-the-shelf telescopic slides.

With extensive first-class manufacturing and testing facilities, certified to ISO9001, with the European plants also achieving the ISO14001 Environmental Standard and the ISO TS16949 standard for automotive production, Accuride slides represent unequivocal quality components that will perform reliably over the lifetime of your product.

Accuride slides ensure the smooth movement of sliding components, contributing significantly to optimum space utilisation, efficient storage and easy access for repair and maintenance. Typical installations include commercial/industrial machinery, electronic enclosures, a wide variety of transport applications such as emergency vehicles, and trucks as well as aircraft, trains, ships and boats.

Our long association with Accuride has given us many years experience which enables us to respond quickly and positively to your needs, giving advice and assistance, thus, helping you to determine which telescopic slide is most suited to your particular application.

Quick Reference Guide

MAIN FEATURES															
Load rating - kg	Extension	AJ slide ref:	Accuride slide ref:	Max load - kg	Slide thickness x height - mm	Disconnect	Hold-in	Hold-out	Lock-in	Lock-out	Self close	Corrosion resistant	Optional bracket	Other features	Page
-50	75%	1297	0201	50	9.5 x 35.3								X		b14
-50	75%	1295	2132	50	12.7 x 35.0	X	X						X		b15
-50	100%	1310	2601	45	12.7 x 26.3		X							Minimum section	b16
-50	100%	1309	3832	50	12.7 x 45.7	X	X						X		b17
-50	100%	1309	3832SC	50	12.7 x 45.7	X	X				X		X		b18
-50	100%	1309	3832HDSC	50	12.7 x 45.7	X	X				X		X		b18
-50	100%	1309	3832DO	50	12.7 x 45.7	X	X	X					X		b19
51-99	75%	1298	0204	65	9.5 x 35.3	X				X			X		b20
51-99	100%	1312	DS0330	65	19.1 x 35.3		X					X		Stainless steel	b21
51-99	100%+	1305	3307	68	12.7 x 50.8	X				X			X		b22
51-99	100%+	1317	3308	68	12.7 x 50.8	X			X	X			X		b23
51-99	100%+	1311	0301	70	19.1 x 35.3								X		b24
51-99	100%+	1313	0305	70	19.1 x 35.3	X				X			X		b25
100+	100%	1318	3607	120	19.1 x 53.1	X				X			X		b26
100+	100%	1316	9301	227	19.1 x 76.2								X		b27
100+	100%	1319	9308	227	19.1 x 76.2				X	X			X	Front lever lock release	b28
100+	100%+	1308	5321	180	19.1 x 53.1		X						X		b29
100+	100%+	1307	0522	180	26.5 x 95.5									Shock blocks & mounting plate	b30

Accuride: Telescopic Slides

TWO BEAM SLIDES

- Load rating up to 50kg per pair
- 75% extension
- 9.5mm slide thickness
- Basic 2 section slide
- 10,000 cycles tested

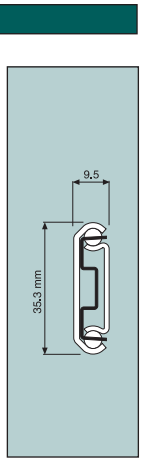

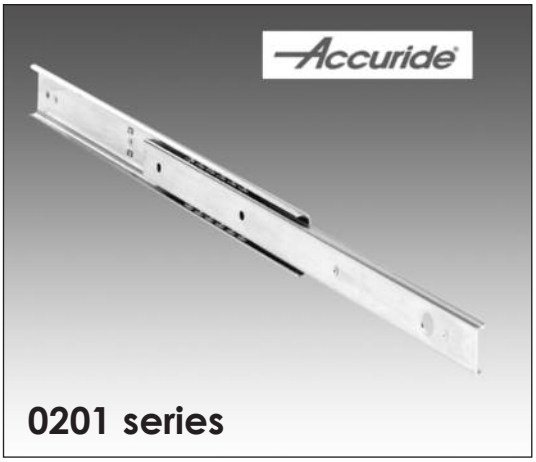

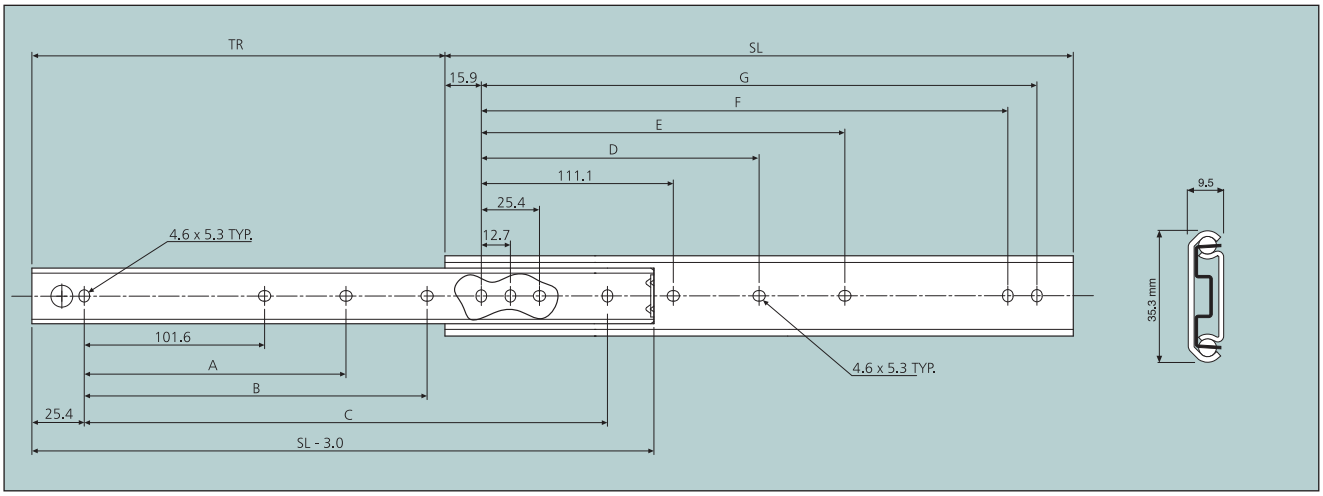

Part No.	SL	Travel	A	B	C	D	E	F	G	Weight	Load
1297/305*	305	227	-	152.4	254.0	-	149.2	260.3	273.0	0.57	50
1297/355	356	277	-	203.2	304.8	-	200.0	311.1	323.8	0.66	50
1297/406*	406	302	-	254.0	355.6	-	250.8	361.9	374.6	0.77	45
1297/457	457	327	203.2	304.8	406.4	212.7	301.6	412.7	425.4	0.87	45
1297/508*	508	378	228.6	355.6	457.2	238.1	352.4	463.5	476.2	0.96	40
1297/558	559	405	254.0	406.4	508.0	263.5	403.2	514.3	527.0	1.06	40
1297/610*	610	429	279.4	457.2	558.8	288.9	454.0	565.1	577.8	1.17	35
1297/660	660	481	304.8	508.0	609.6	314.3	504.8	615.9	628.6	1.25	30
1297/711*	711	506	330.2	558.8	660.4	339.7	555.6	666.8	679.4	1.34	30

Notes:
- All dimensions in mm. • All weights in kg. • Load ratings quoted per pair.
- Load ratings shown are representative of a wide range of typical applications and take into consideration factors which can adversely affect performance. Please contact us with specific application details where load ratings are critical.
- * Non stock items subject to lead time and minimum order quantities - call for details.
- Stock items listed have a bright zinc-plate finish.
- Optional bracketry available on request.
- Recommended fixing with M4 screws.

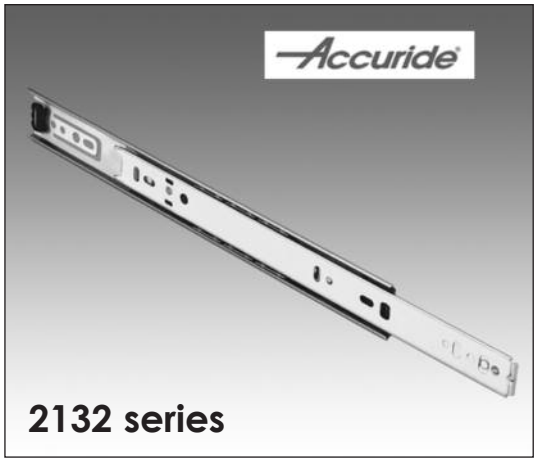

TWO BEAM SLIDES

- Load rating up to 50kg per pair
- 75% extension
- 12.7mm slide thickness
- Integral drawer cam adjuster
- Front chassis disconnects
- Hold-in facility
- 10,000 cycles tested

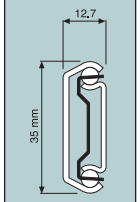

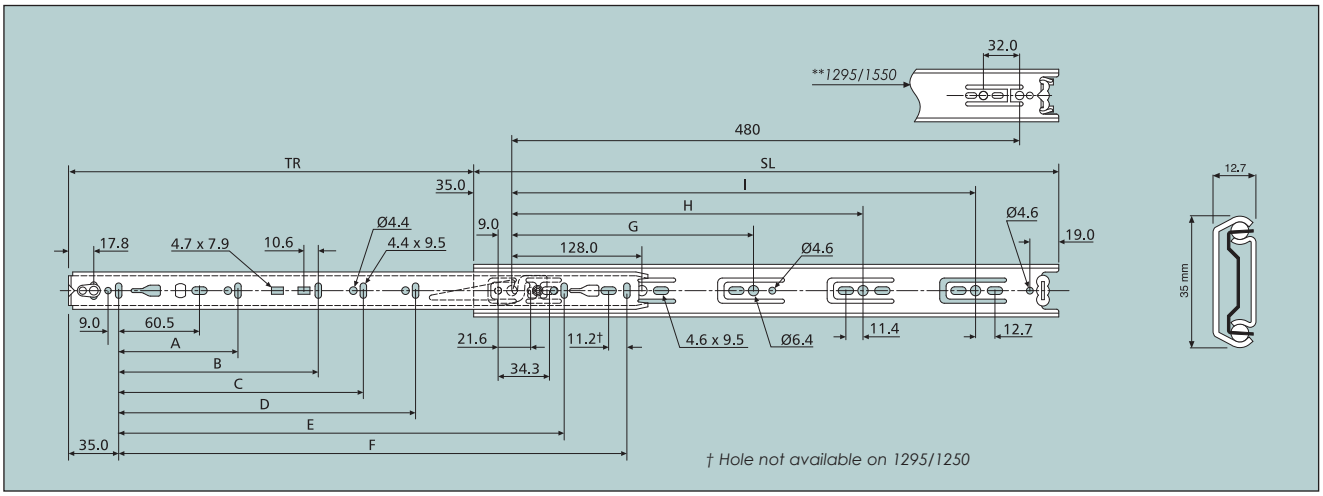

Part No.	SL	Travel	A	B	C	D	E	F	G	H	I	Weight	Load
1295/1250	250	163	96	-	-	-	-	192	-	-	-	0.49	50
1295/1300	300	205	96	-	-	-	-	242	224	-	-	0.56	50
1295/1350	350	260	128	-	-	-	-	292	224	-	-	0.69	50
1295/1400	400	281	128	-	-	-	-	342	224	-	320	0.77	45
1295/1450	450	331	128	224	-	-	-	392	224	-	352	0.84	45
1295/1500	500	376	128	224	-	-	-	442	224	-	416	0.94	45
1295/1550	550	415	128	224	320	-	-	492	224	352	**	1.05	40
1295/1600	600	451	128	224	320	-	-	542	224	352	480	1.13	40
1295/1650	650	488	128	224	320	416	544	592	224	352	544	1.25	35
1295/1700	700	526	128	224	288	416	-	642	224	352	544	1.37	35

Notes:
- All dimensions in mm. • All weights in kg. • Load ratings quoted per pair.
- Load ratings shown are representative of a wide range of typical applications and take into consideration factors which can adversely affect performance. Please contact us with specific application details where load ratings are critical.
- Stock items listed have a bright zinc-plate finish.
- Black zinc-plate finish available on request, subject to minimium order quantities.
- Optional bracketry available on request.
- Recommended fixing with M4 screws.

Accuride: Telescopic Slides

albert Jagger limited

Accuride: Telescopic Slides

THREE BEAM SLIDES - *'MINISLIDE'*

- Load rating up to 45kg per pair
- 100% extension
- 12.7mm slide thickness
- Low profile - 26.3mm high
- Hold-in facilty
- 80,000 cycles tested

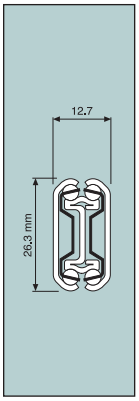

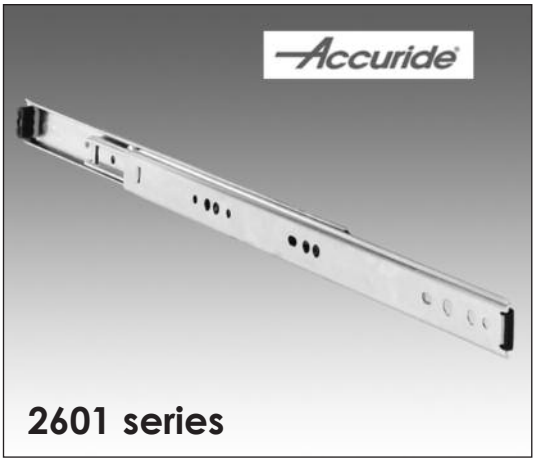

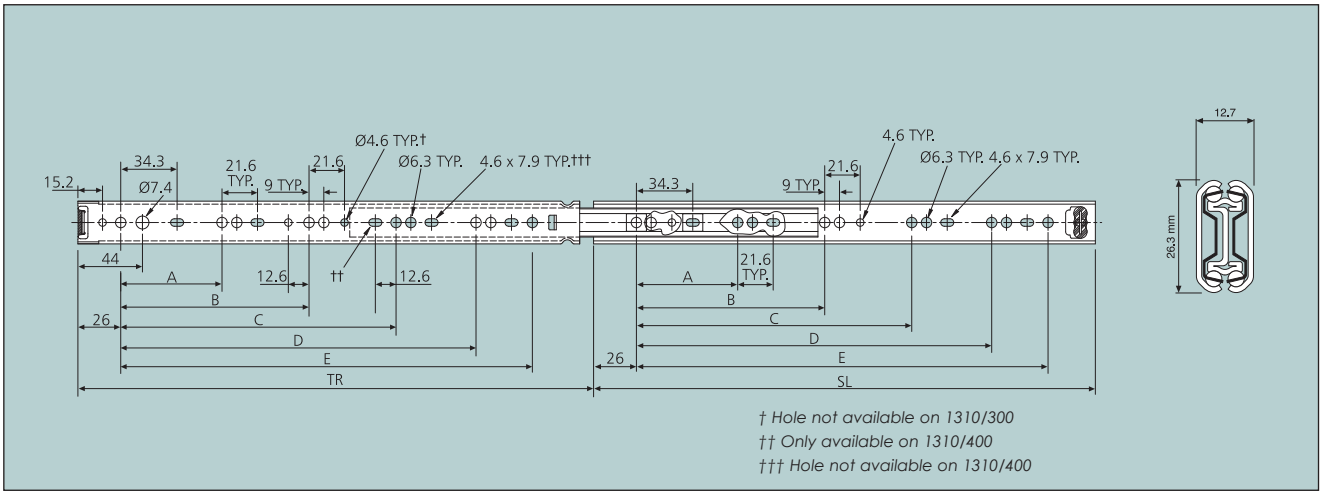

† Hole not available on 1310/300
†† Only available on 1310/400
††† Hole not available on 1310/400

Part No.	SL	Travel	A	B	C	D	E	Weight	Load
1310/150*	150	147.5	78.0	-	-	-	-	0.35	12
1310/200	200	209	128	-	-	-	-	0.46	16
1310/250	250	259	128	-	-	-	-	0.61	25
1310/300	300	308	128	224	-	-	-	0.73	35
1310/350	350	357	128	224	-	-	-	0.85	35
1310/400	400	406	128	224	320	-	-	0.97	45
1310/450	450	456	128	224	352	-	-	1.09	45
1310/500	500	505	128	224	352	416	-	1.21	35
1310/550	550	554	128	224	352	448	489	1.34	30

Notes:
- All dimensions in mm. • All weights in kg. • Load ratings quoted per pair.
- Load ratings shown are representative of a wide range of typical applications and take into consideration factors which can adversely affect performance. Please contact us with specific application details where load ratings are critical.
- Stock items listed have a bright zinc-plate finish.
- * Non stock items subject to lead time and minimum order quantities - call for details.
- Recommended fixing with M4 screws/ 6mm Euro screw. Maximum head @ 2mm/Ø7.8mm.
- Horizontal mounting **NOT** recommended.

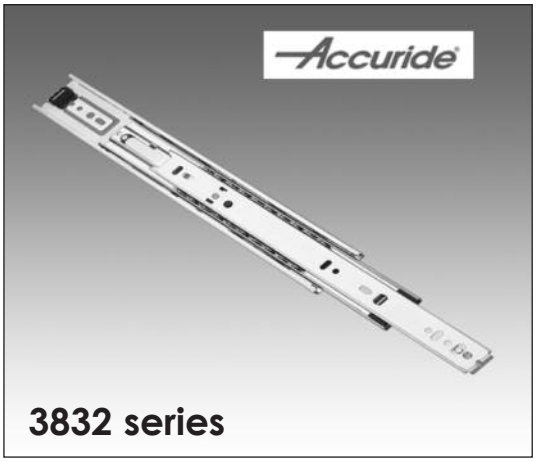

THREE BEAM SLIDES - *'SUPERSLIM'*

- Load rating up to 50kg per pair
- 100% extension
- 12.7mm slide thickness
- Front chassis disconnects
- Hold-in facilty
  (refer b18 & b19 for alternate options)
- Integral drawer cam adjuster
- 10,000 cycles tested

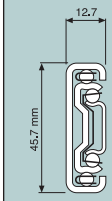

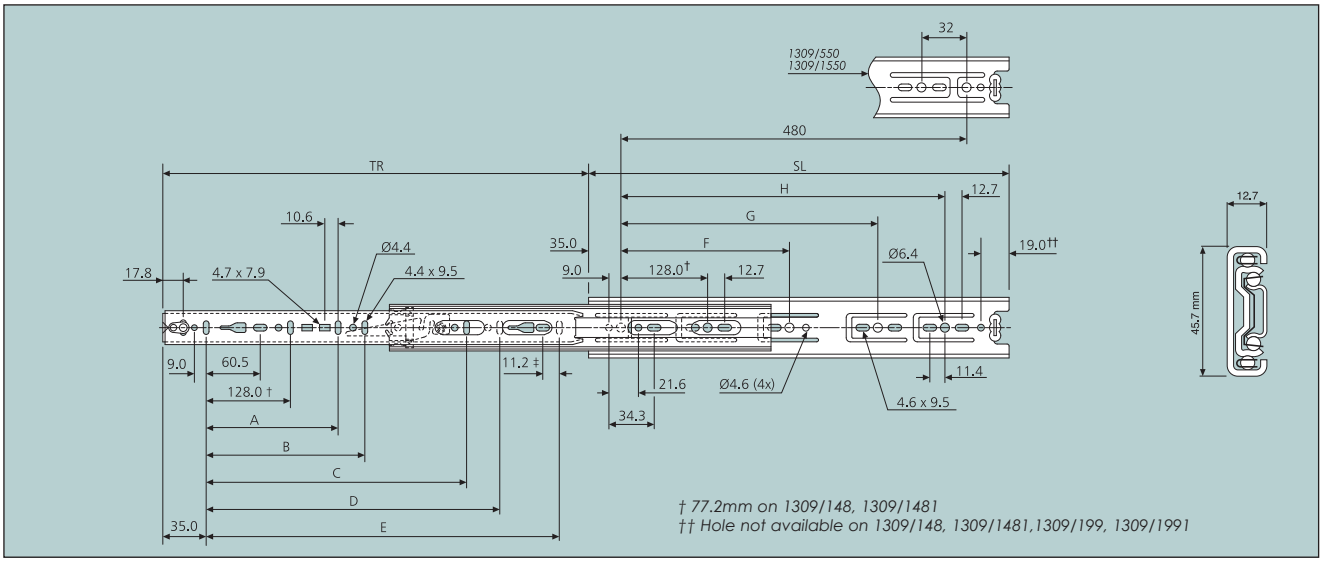

DB - Part No.	DZ - Part No.	SL	Travel	A	B	C	D	E	F	G	H	Weight	Load
1309/148*	1309/1148*	148	140	-	-	-	-	-	-	-	-	0.44	50
1309/199*	1309/1199*	199	203	-	-	-	-	141	-	-	-	0.62	50
1309/250	1309/1250	250	243	-	-	-	-	192	-	-	-	0.79	50
1309/300	1309/1300	300	305	-	-	-	-	242	224	-	-	0.95	50
1309/350	1309/1350	350	356	-	-	-	-	292	224	-	-	1.10	50
1309/400	1309/1400	400	406	-	-	-	-	342	224	320	-	1.27	50
1309/450	1309/1450	450	457	-	-	320	-	392	224	352	-	1.42	50
1309/500	1309/1500	500	508	-	-	320	-	442	224	416	-	1.58	50
1309/550	1309/1550	550	559	-	-	320	416	492	224	352	448	1.75	50
1309/600	1309/1600	600	610	224	-	416	-	542	224	352	480	1.91	50
1309/650	1309/1650	650	660	224	-	416	544	592	224	352	544	2.06	50
1309/700	1309/1700	700	711	224	288	416	544	642	224	352	544	2.22	50

Notes:
- All dimensions in mm. • All weights in kg. • Load ratings quoted per pair.
- Load ratings shown are representative of a wide range of typical applications and take into consideration factors which can adversely affect performance. Please contact us with specific application details where load ratings are critical.
- DB = black zinc plate, DZ = bright zinc plate (white electro plate available on request).
- Optional bracketry available on request.
- Recommended fixing with M4 screws.
- Horizontal mounting NOT recommended.
- * Non stock items subject to lead time and minimum order quantities - call for details.

Accuride: Telescopic Slides

albert Jagger limited

Accuride: Telescopic Slides

THREE BEAM SLIDES - *'SUPERSLIM SELF CLOSE'*

- Load rating up to 50kg per pair
- 100% extension
- 12.7mm slide thickness
- Front chassis disconnects
- Self close facility
  (refer b17 & b19 for alternate options)
- Hold-in facilty
- Integral drawer cam adjuster
- 10,000 cycles tested

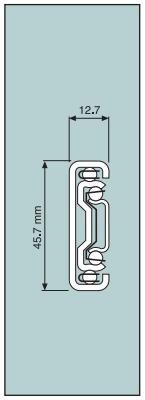

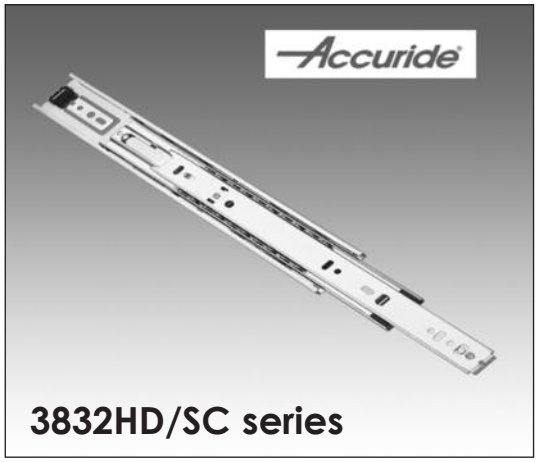

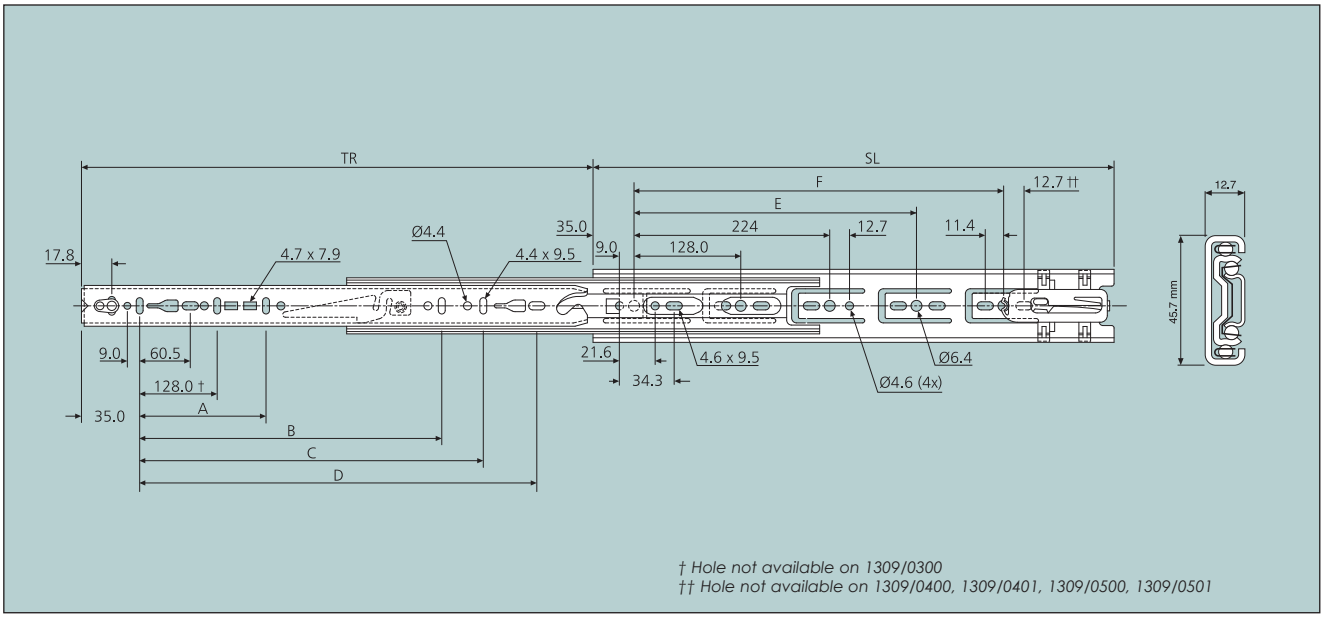

† Hole not available on 1309/0300
†† Hole not available on 1309/0400, 1309/0401, 1309/0500, 1309/0501

SC - Part No.	HDSC- Part No.	SL	Travel	A	B	C	D	E	F	Weight	Load
1309/0300	1309/0301	300	286	-	-	-	231	-	-	0.95	50
1309/0350	1309/0351	350	356	-	-	-	281	-	-	1.10	50
1309/0400	1309/0401	400	406	-	-	-	331	288	-	1.27	50
1309/0450	1309/0451	450	457	-	320	-	381	320	-	1.42	50
1309/0500	1309/0501	500	508	-	-	-	431	384	-	1.58	50
1309/0550	1309/0551	550	559	-	416	-	481	416	-	1.75	50
1309/0600	1309/0601	600	610	224	416	-	531	352	480	1.91	50
1309/0650	1309/0651	650	660	224	416	544	581	352	512	2.06	50

Notes:
- All dimensions in mm. • All weights in kg. • Load ratings quoted per pair.
- Load ratings shown are representative of a wide range of typical applications and take into consideration factors which can adversely affect performance. Please contact us with specific application details where load ratings are critical.
- SC: 1.4kg to 2.7kg closing/opening force
- HDSC: 2.7kg to 4.1kg closing/opening force.
- Stock items listed have a bright zinc-plate finish.
- Optional bracketry available on request.
- Recommended fixing with M4 screws.
- Horizontal mounting NOT recommended.

www.albert-jagger.co.uk Walsall: 01922 471000 Heywood: 01706 692110 Romsey: 01794 525870

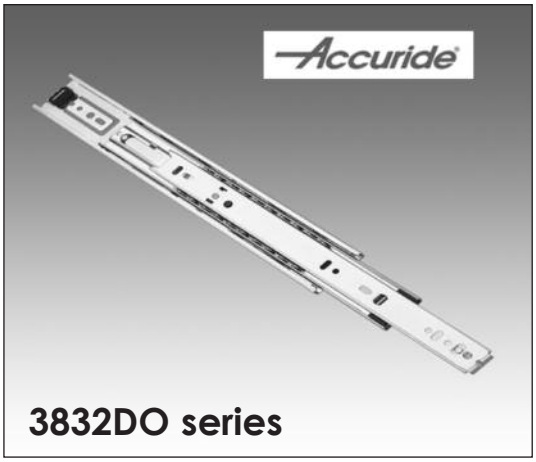

THREE BEAM SLIDES - *'SUPERSLIM HOLD OUT'*

- Load rating up to 50kg per pair
- 100% extension
- 12.7mm slide thickness
- Front chassis disconnects
- Hold-out facility
  (refer b17 & b18 for alternate options)
- Hold-in facilty
- Integral drawer cam adjuster
- 10,000 cycles tested

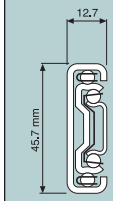

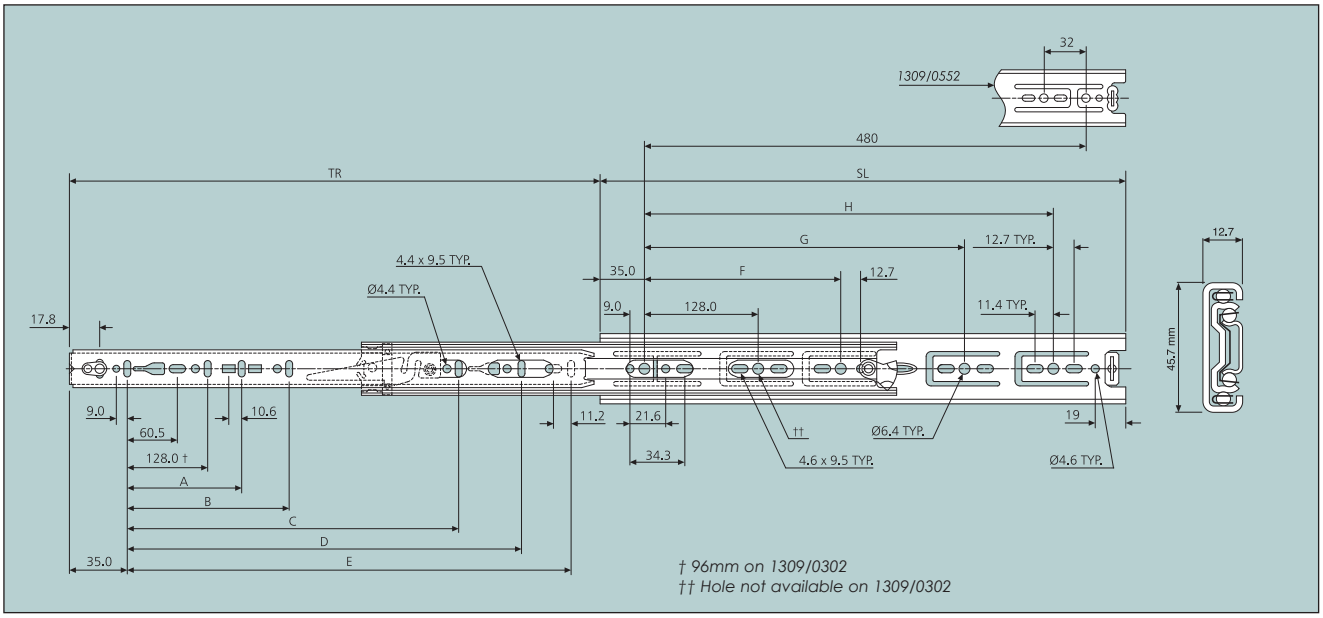

Part No.	SL	Travel	A	B	C	D	E	F	G	H	Weight	Load
1309/0302	300	305	-	-	-	-	242	224	-	-	0.95	50
1309/0352	350	356	-	-	-	-	292	224	-	-	1.10	50
1309/0402	400	406	-	-	-	-	342	224	320	-	1.27	50
1309/0452	450	457	-	-	320	-	392	-	352	-	1.42	50
1309/0502	500	508	-	-	320	-	442	-	416	-	1.58	50
1309/0552	550	559	-	-	320	416	492	-	352	-	1.75	50
1309/0602	600	610	224	-	416	-	542	224	352	480	1.91	50
1309/0652	650	660	224	-	416	544	592	224	352	544	2.06	50
1309/0702	700	711	224	288	416	544	642	224	352	544	2.22	50

Notes:
- All dimensions in mm. • All weights in kg. • Load ratings quoted per pair.
- Load ratings shown are representative of a wide range of typical applications and take into consideration factors which can adversely affect performance. Please contact us with specific application details where load ratings are critical.
- Stock items listed have a bright zinc-plate finish.
- Optional bracketry available on request.
- Recommended fixing with M4 screws.
- Horizontal mounting NOT recommended.

Accuride: Telescopic Slides

Accuride: Telescopic Slides

TWO BEAM SLIDES

- Load rating up to 65kg per pair
- 75% extension
- 9.5mm slide thickness
- Front chassis disconnects
- Lock-out facilty
- 10,000 cycles tested

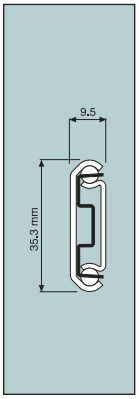

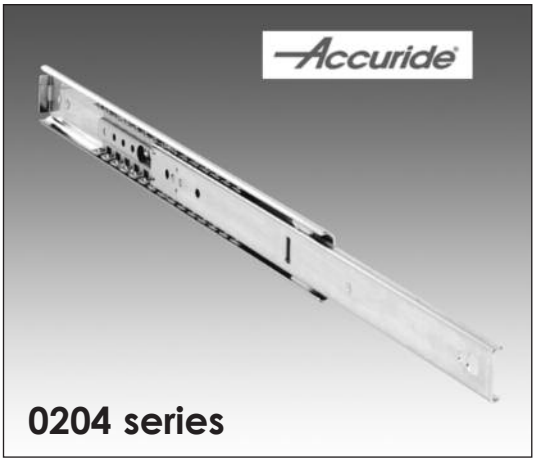

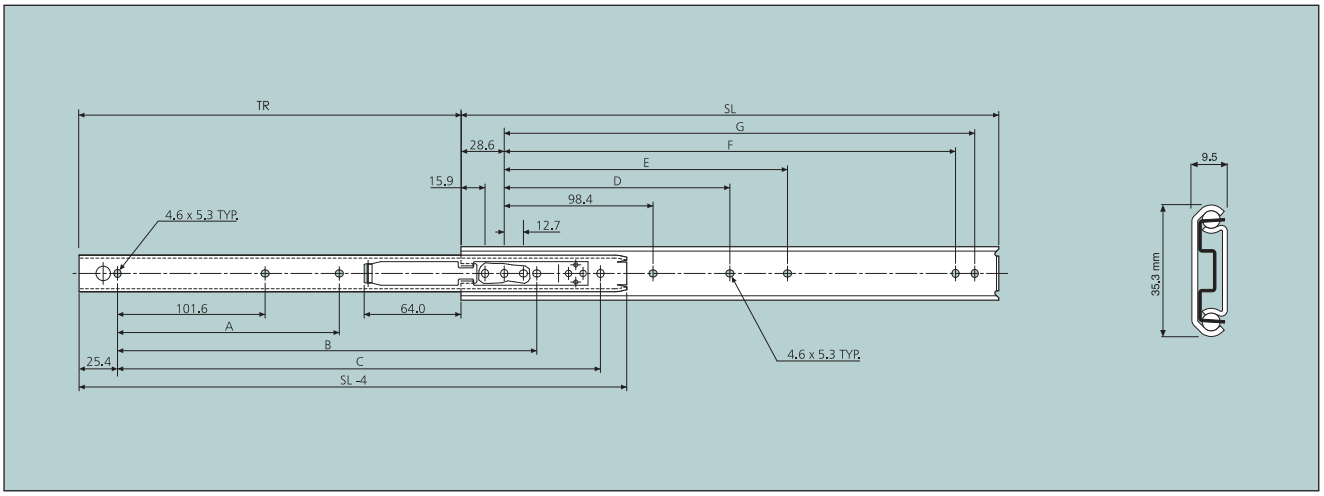

Part No.	SL	Travel	A	B	C	D	E	F	G	Weight	Load
1298/305*	305	201.5	-	215.9	254.0	-	136.5	247.6	260.3	0.63	65
1298/356*	356	252.5	-	266.7	304.8	-	187.3	298.4	311.1	0.73	65
1298/406	406	303.0	-	317.5	355.6	-	238.1	349.2	361.9	0.84	60
1298/457*	457	329.0	203.2	342.9	406.4	200.0	288.9	400.0	412.7	0.94	55
1298/508*	508	379.5	228.6	393.7	457.2	225.4	339.7	450.8	463.5	1.05	50
1298/559*	559	405.0	254.0	419.1	508.0	250.8	390.5	501.6	514.3	1.15	40
1298/609	610	430.5	279.4	444.5	558.8	276.2	441.3	552.4	565.1	1.27	35
1298/660*	660	481.5	304.8	495.3	609.6	301.6	492.1	603.2	615.9	1.37	30
1298/711*	711	506.5	330.2	520.7	660.4	327.0	542.9	654.0	666.7	1.47	30

Notes:
- All dimensions in mm. • All weights in kg. • Load ratings quoted per pair.
- Load ratings shown are representative of a wide range of typical applications and take into consideration factors which can adversely affect performance. Please contact us with specific application details where load ratings are critical.
- * Non stock items subject to lead time and minimum order quantities - call for details.
- Stock items listed have a bright zinc-plate finish.
- Optional bracketry available on request.
- Recommended fixing with M4 screws.

THREE BEAM SLIDES - *STAINLESS STEEL*

- Load rating up to 65kg per pair
- 100% extension
- 19.1mm slide thickness
- High grade stainless steel *(1.4301x5 CrNi 1810)*
- Hold-in facilty
- 80,000 cycles tested

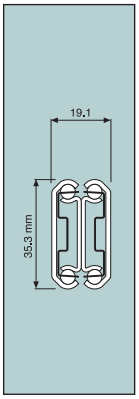

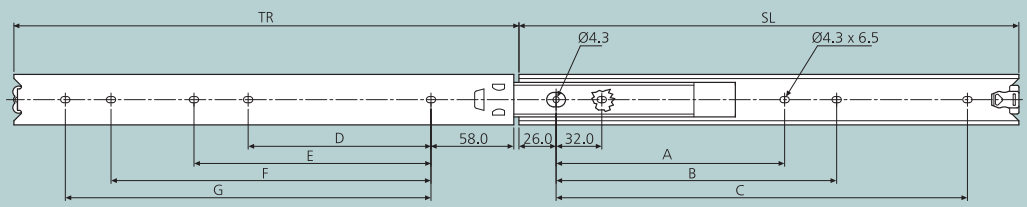

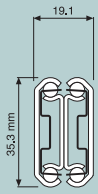

Part No.	SL	Travel	A	B	C	D	E	F	G	Weight	Load
1312/300*	300	304.5	-	192	224	-	-	192	224	1.15	50
1312/350*	350	354.0	-	224	256	-	-	224	256	1.36	55
1312/400*	400	403.0	-	192	320	160	-	288	320	1.46	55
1312/450	450	452.0	-	224	352	192	-	320	352	1.66	65
1312/500*	500	501.0	256	288	416	224	256	384	416	1.88	55
1312/550	550	550.5	288	320	480	256	288	416	448	2.06	50
1312/600*	600	600.0	320	352	512	288	320	480	512	2.27	45
1312/700*	700	698.0	352	384	608	320	352	576	608	2.70	35

Notes:
- All dimensions in mm. • All weights in kg. • Load ratings quoted per pair.
- Load ratings shown are representative of a wide range of typical applications and take into consideration factors which can adversely affect performance. Please contact us with specific application details where load ratings are critical.
- * Non stock items subject to lead time and minimum order quantities - call for details.
- Recommended fixing with M4 screws.

Accuride: Telescopic Slides

albert Jagger limited

Accuride: Telescopic Slides

THREE BEAM SLIDES - *'SUPERPLUS'*

- Load rating up to 68kg per pair
- 100%+ extension
- 12.7mm slide thickness
- Front chassis disconnects
- Lock-out facilty
- Fixing hardware pack included
- 10,000 cycles tested

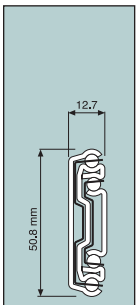

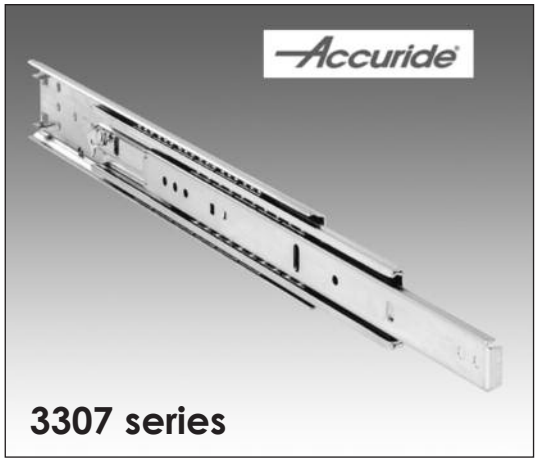

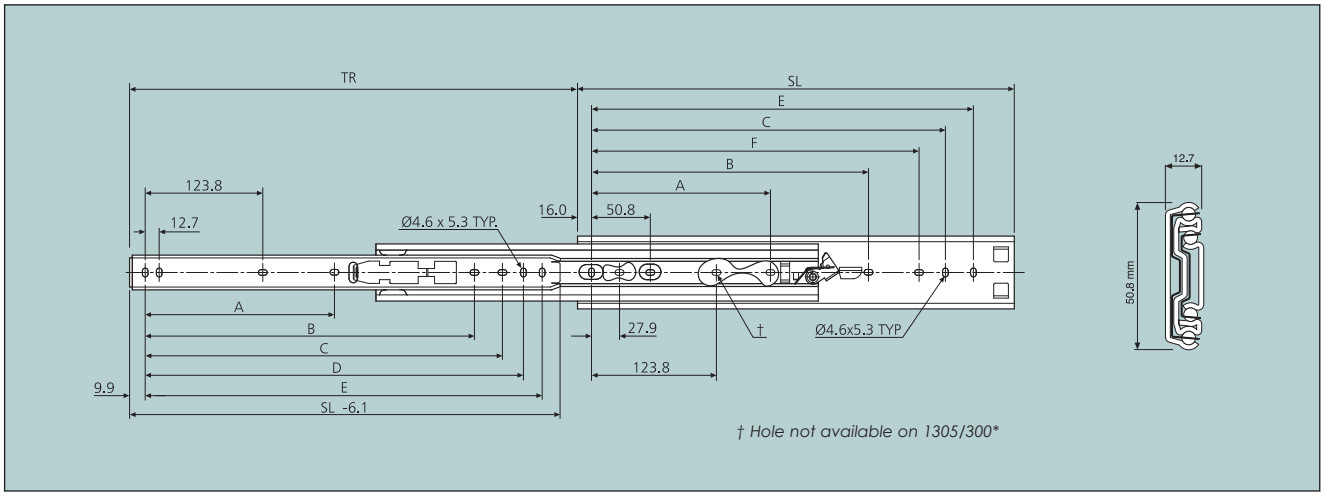

Part No.	SL	Travel	A	B	C	D	E	F	Weight	Load
1305/300*	305	330	-	-	234.9	247.6	260.3	209.5	1.20	68
1305/350*	356	381	-	-	285.7	298.4	311.1	260.3	1.41	67
1305/400*	406	432	-	-	336.5	349.2	361.9	311.1	1.59	67
1305/450	457	483	177.8	314.4	387.3	400.0	412.7	361.9	1.82	66
1305/500	508	533	203.2	365.2	438.1	450.8	463.5	412.7	2.00	66
1305/550	559	584	228.6	416.0	488.9	501.6	514.3	463.5	2.23	64
1305/600	610	635	254.0	466.8	539.7	552.4	565.1	514.3	2.41	61
1305/660	660	686	279.4	517.6	590.5	603.2	615.9	565.1	2.64	58
1305/711*	711	737	304.8	568.4	641.3	654.0	666.7	615.9	2.81	55

Notes:
- All dimensions in mm. • All weights in kg. • Load ratings quoted per pair.
- Load ratings shown are representative of a wide range of typical applications and take into consideration factors which can adversely affect performance. Please contact us with specific application details where load ratings are critical.
- * Non stock items subject to lead time and minimum order quantities - call for details.
- Stock items listed have a bright zinc-plate finish.
- Optional bracketry available on request.
- Recommended fixing with M4 screws.

www.albert-jagger.co.uk Walsall: 01922 471000 Heywood: 01706 692110 Romsey: 01794 525870

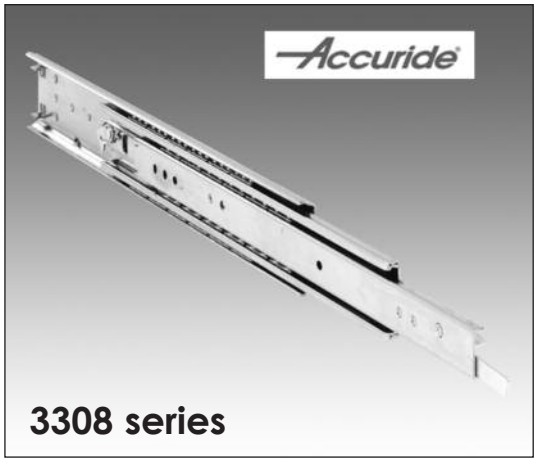

THREE BEAM SLIDES - *'DUOLOCK'*

- Load rating up to 68kg per pair
- 100%+ extension
- 12.7mm slide thickness
- Lock-in facility
- Lock-out facilty
- Front chassis disconnects
- Fixing hardware pack included
- 10,000 cycles tested

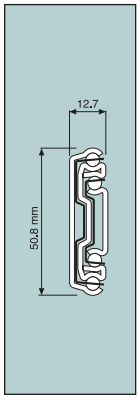

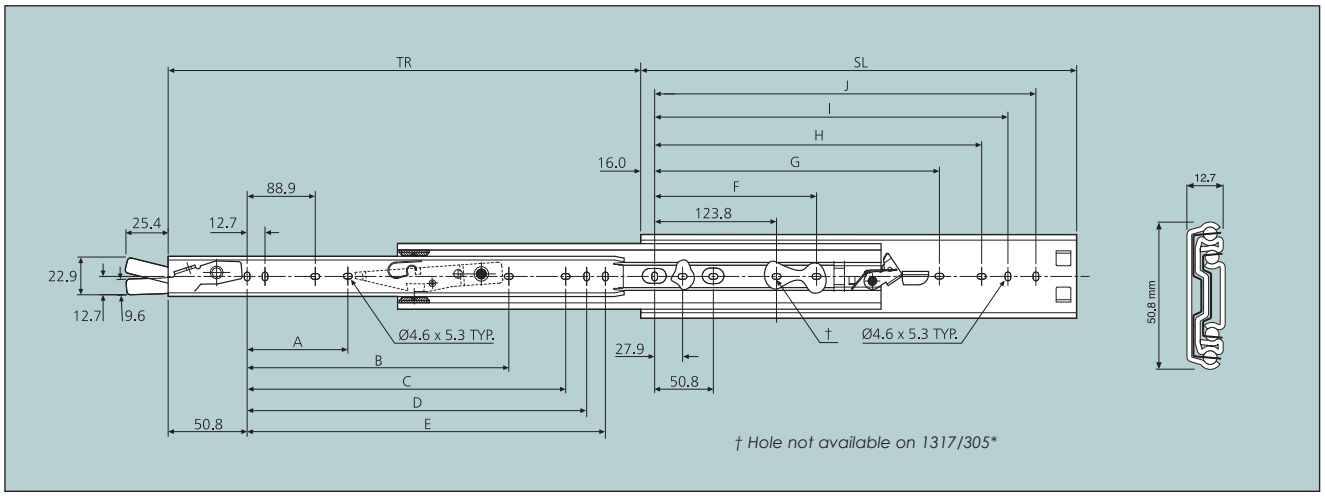

Part No.	SL	Travel	A	B	C	D	E	F	G	H	I	J	Weight	Load
1317/305*	305	330	-	-	220.1	212.8	225.5	-	-	209.5	234.9	260.3	1.25	68
1317/356*	356	381	-	-	250.9	263.6	276.3	-	-	260.3	285.7	311.1	1.41	67
1317/406*	406	432	-	-	301.7	314.4	327.1	-	-	311.1	336.5	361.9	1.59	67
1317/457*	457	483	143.0	279.4	352.5	365.2	377.9	177.8	314.4	361.9	387.3	412.7	1.82	66
1317/508*	508	533	168.4	330.2	403.3	416.0	428.7	203.2	365.2	412.7	438.1	463.5	2.00	66
1317/559*	559	584	193.8	381.0	454.1	466.8	479.5	228.6	416.0	463.5	488.9	514.3	2.23	64
1317/610*	610	635	219.2	431.8	504.9	517.6	530.3	254.0	466.8	514.3	539.7	565.1	2.41	61
1317/660*	660	686	244.6	482.6	555.7	568.4	581.1	279.4	517.6	565.1	590.5	615.9	2.78	58
1317/711*	711	737	270.0	533.4	606.5	619.2	631.9	304.8	568.4	615.9	641.3	666.7	2.96	55

Notes:
- All dimensions in mm. • All weights in kg. • Load ratings quoted per pair.
- Load ratings shown are representative of a wide range of typical applications and take into consideration factors which can adversely affect performance. Please contact us with specific application details where load ratings are critical.
- * Non stock items subject to lead time and minimum order quantities - call for details.
- Stock items listed have a bright zinc-plate finish.
- Optional bracketry available on request.
- Recommended fixing with M4 screws.

Accuride: Telescopic Slides

Accuride: Telescopic Slides

THREE BEAM SLIDES - *'MAXSLIDE'*

- Load rating up to 70kg per pair
- 100%+ extension
- 19.1mm slide thickness
- Low profile - 35.3mm high
- 10,000 cycles tested

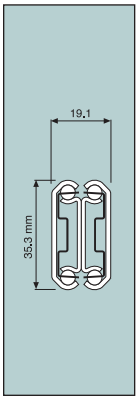

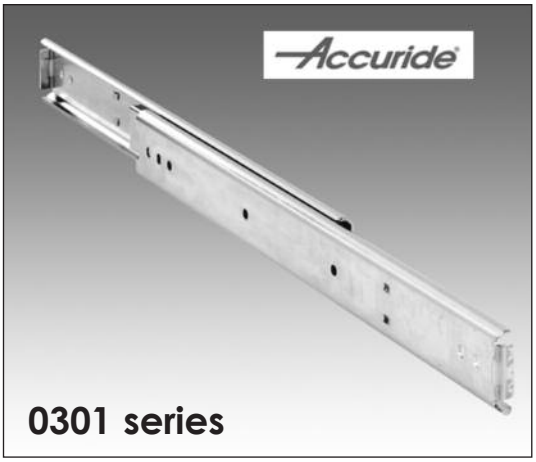

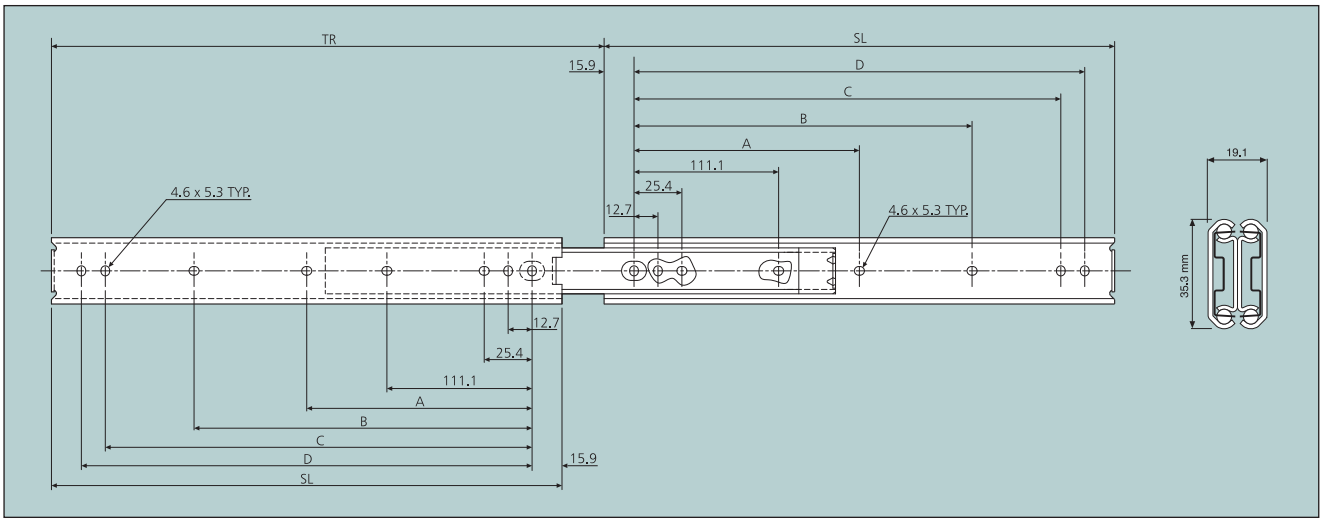

Part No.	SL	Travel	A	B	C	D	Weight	Load
1311/304	305	327	-	149.2	260.3	273.0	1.31	70
1311/356*	356	378	-	200.0	311.1	323.8	1.57	67
1311/406*	406	429	-	250.8	361.9	374.6	1.80	65
1311/457*	457	480	212.7	301.6	412.7	425.4	2.02	63
1311/508	508	530	238.1	352.4	463.5	476.2	2.27	60
1311/559*	559	581	263.5	403.2	514.3	527.0	2.51	55
1311/609*	610	632	288.9	454.0	565.1	577.8	2.73	50
1311/660	660	683	314.3	504.8	615.9	628.6	2.93	45
1311/711	711	734	339.7	555.6	666.7	679.4	3.13	40

Notes:
- All dimensions in mm. • All weights in kg. • Load ratings quoted per pair.
- Load ratings shown are representative of a wide range of typical applications and take into consideration factors which can adversely affect performance. Please contact us with specific application details where load ratings are critical.
- * Non stock items subject to lead time and minimum order quantities - call for details.
- Stock items listed have a bright zinc-plate finish.
- Optional bracketry available on request.
- Recommended fixing with M4 screws.

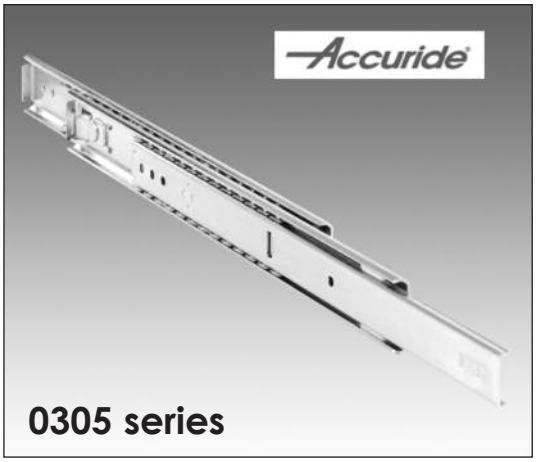

THREE BEAM SLIDES - *'RECESSABLE'*

- Load rating up to 70kg per pair
- 100%+ extension
- 19.1mm slide thickness
- 10mm side space when recessed
- Front chassis disconnects
- Lock-out facility
- 10,000 cycles tested

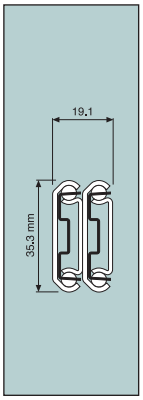

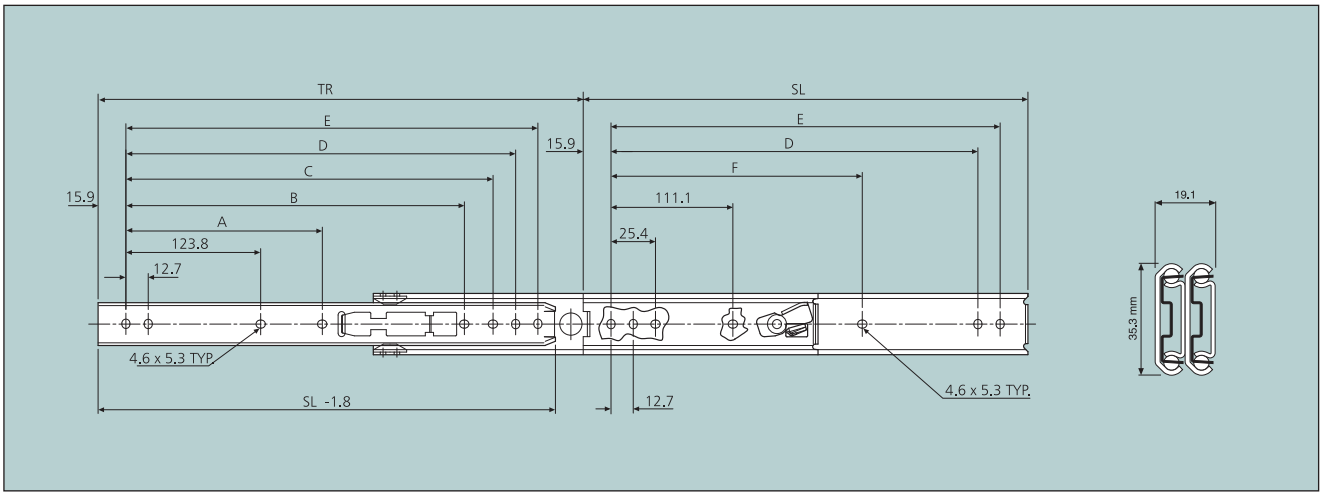

Part No.	SL	Travel	A	B	C	D	E	F	Weight	Load
1313/305*	305	327.0	-	-	-	260.3	273.0	-	1.21	64
1313/355	356	378.0	-	-	298.4	311.1	323.8	-	1.42	60
1313/406	406	429.0	-	-	349.2	361.9	374.6	250.8	1.63	65
1313/457	457	479.5	212.7	-	400.0	412.7	425.4	301.6	1.81	70
1313/508*	508	530.5	238.1	365.2	450.8	463.5	476.2	352.4	2.03	65
1313/558	559	581.0	263.5	415.9	501.6	514.3	527.0	403.2	2.24	60
1313/609	610	632.0	288.9	466.7	552.4	565.1	577.8	454.0	2.46	55
1313/682*	660	683.0	314.3	517.7	603.2	615.9	628.6	504.8	2.68	39
1313/711*	711	733.5	339.7	568.3	654.0	666.7	679.4	555.6	2.90	36

Notes:
- All dimensions in mm. • All weights in kg. • Load ratings quoted per pair.
- Load ratings shown are representative of a wide range of typical applications and take into consideration factors which can adversely affect performance. Please contact us with specific application details where load ratings are critical.
- * Non stock items subject to lead time and minimum order quantities - call for details.
- Stock items listed have a bright zinc-plate finish.
- Optional bracketry available on request.
- Recommended fixing with M4 screws.

Accuride: Telescopic Slides

Accuride: Telescopic Slides

THREE BEAM SLIDES - *'MONOLOCK'*

- Load rating up to 120kg per pair
- 100% extension
- 19.1mm slide thickness
- Front chassis disconnects
- Lock-out facilty
- Fixing hardware pack included
- 10,000 cycles tested

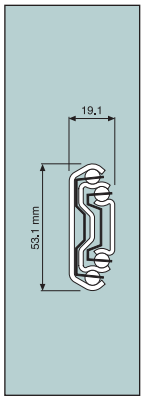

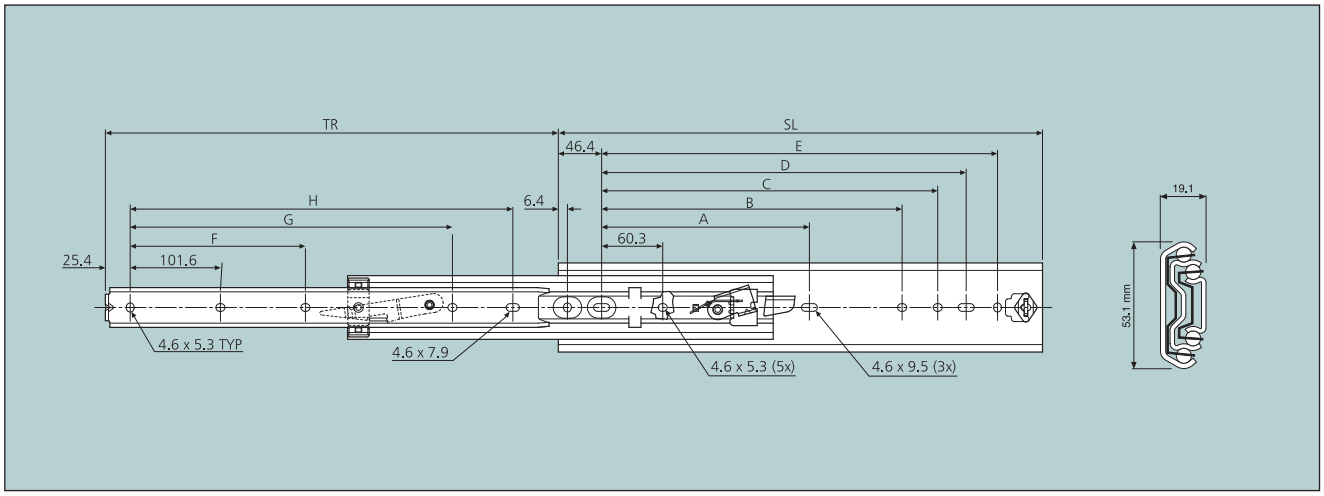

Part No.	SL	Travel	A	B	C	D	E	F	G	H	Weight	Load
1318/305*	305	305	-	135.4	179.1	204.5	229.9	-	-	228.6	1.71	90
1318/356	356	356	-	186.2	229.9	255.3	280.7	-	-	279.4	2.02	90
1318/406*	406	406	-	237.0	280.7	306.1	331.5	-	257.3	330.2	2.27	100
1318/457*	457	457	-	287.8	331.5	356.9	382.3	-	308.1	381.0	2.62	110
1318/508*	508	508	215.9	338.6	382.3	407.7	433.1	203.2	358.9	431.8	2.93	120
1318/559*	559	559	241.3	389.4	433.1	458.5	483.9	228.6	409.7	482.6	3.24	110
1318/610*	610	610	266.7	440.2	483.9	509.3	534.7	254.0	460.5	533.4	3.53	100
1318/660*	660	660	292.1	491.0	534.7	560.1	585.5	279.4	511.3	584.2	3.83	92
1318/711*	711	711	317.5	541.8	585.5	610.9	636.3	304.8	562.1	635.0	4.16	83

Notes:
- All dimensions in mm. • All weights in kg. • Load ratings quoted per pair.
- Load ratings shown are representative of a wide range of typical applications and take into consideration factors which can adversely affect performance. Please contact us with specific application details where load ratings are critical.
- * Non stock items subject to lead time and minimum order quantities - call for details.
- Stock items listed have a bright zinc-plate finish.
- Optional bracketry available on request.
- Recommended fixing with M4 screws.

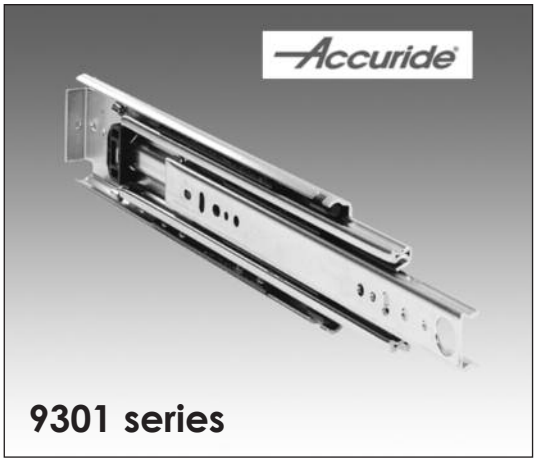

THREE BEAM SLIDES - *'ULTRASLIDE'*

- Load rating up to 227kg per pair
- 100% extension
- 19.1mm slide thickness
- Lengths up 1.5m
- 10,000 cycles tested

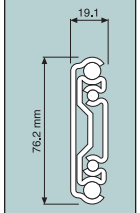

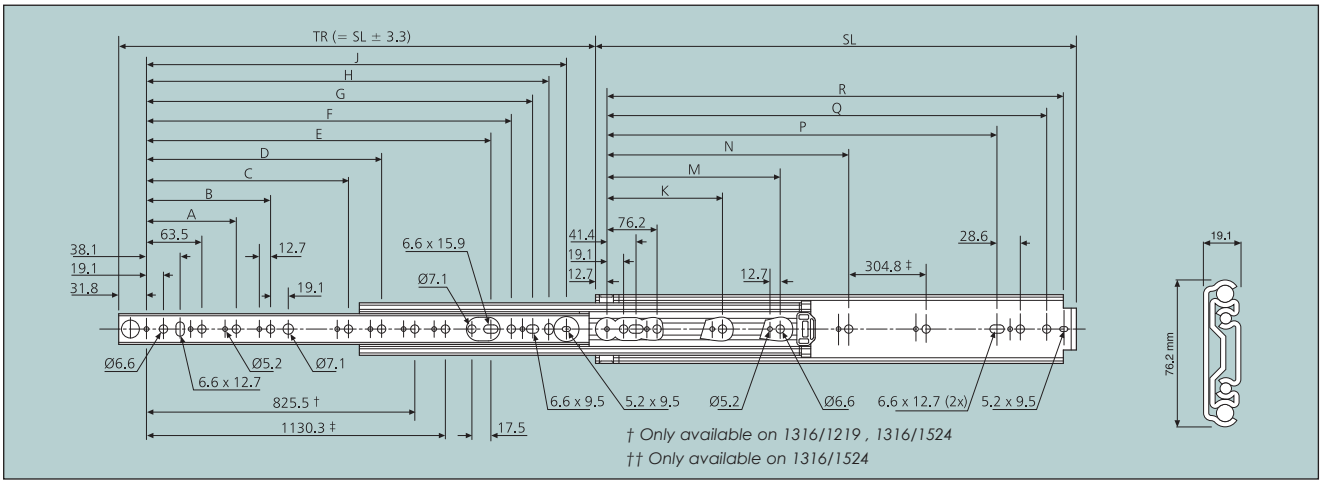

Part No.	SL	Travel	A	B	C	D	E	F	G	H	J	K	M	N	P	Q	R	Weight	Load
1316/254*	254.0	254.0	-	-	-	-	-	103.1	128.5	142.6	166.6	-	-	-	152.4	209.6	228.6	1.20	227
1316/0304	304.8	304.8	-	-	-	-	-	153.9	179.3	198.4	217.4	-	-	-	203.2	260.4	279.4	3.07	227
1316/0355	355.6	355.6	-	-	-	-	-	204.7	230.1	249.2	268.2	-	-	-	254.0	311.2	330.2	3.63	227
1316/0406	406.4	406.4	127.0	-	-	-	-	255.5	280.9	300.0	319.0	-	-	-	304.8	362.0	381.0	4.09	227
1316/0457	457.2	457.2	127.0	-	-	-	246.1	306.3	331.7	350.8	369.8	-	-	-	355.6	412.8	431.8	4.55	227
1316/0508	508.0	508.0	127.0	190.5	-	-	296.9	357.1	382.5	401.6	420.6	-	-	-	406.4	463.6	482.6	5.11	227
1316/0558	558.8	558.8	127.0	190.5	-	-	347.7	407.9	433.3	452.4	471.4	-	-	-	457.2	514.4	533.4	5.68	227
1316/0609	609.6	609.6	127.0	190.5	-	-	398.5	458.7	484.1	503.2	522.2	-	-	-	508.0	565.2	584.2	6.14	227
1316/0660	660.4	660.4	127.0	190.5	-	-	449.3	509.5	534.9	554.0	573.0	-	-	-	558.8	616.0	635.0	6.82	227
1316/0711	711.2	711.2	127.0	190.5	-	-	500.1	560.3	585.7	604.8	623.8	-	-	-	609.6	666.8	685.8	7.05	227
1316/0762	762.0	762.0	127.0	190.5	368.3	-	550.9	611.1	636.5	655.6	674.6	235.0	-	501.7	660.4	717.6	736.6	7.73	222
1316/0812	812.8	812.8	127.0	190.5	368.3	-	601.7	661.9	687.3	706.4	725.4	235.0	393.7	552.5	711.2	768.4	787.4	8.18	218
1316/0863	863.6	863.3	127.0	190.5	368.3	469.9	652.5	712.7	738.1	757.2	776.2	235.0	419.1	603.3	762.0	819.2	838.2	8.64	213
1316/0914	914.4	914.4	127.0	190.5	368.3	520.7	703.3	763.5	788.9	808.0	827.0	235.0	444.5	654.1	812.8	870.0	889.0	9.32	209
1316/1016	1016.0	1016.0	127.0	190.5	368.3	520.7	804.9	865.1	890.5	909.6	928.6	235.0	546.1	755.7	914.4	971.6	990.6	10.43	200
1316/1066	1066.8	1066.8	127.0	190.5	368.3	520.7	855.7	915.9	941.3	960.4	979.4	235.0	546.1	806.5	965.2	1022.4	1041.4	10.89	195
1316/1219	1219.2	1219.2	127.0	190.5	368.3	520.7	1008.1	1068.3	1093.7	1112.8	1131.8	235.0	596.9	958.9	1117.6	1174.8	1193.8	12.27	182
1316/1524	1524.0	1524.0	127.0	190.5	368.3	520.7	1312.9	1373.1	1398.5	1417.6	1436.6	235.0	596.9	958.9	1422.4	1479.6	1498.6	15.45	154

Notes:
- All dimensions in mm. • All weights in kg. • Load ratings quoted per pair.
- Load ratings shown are representative of a wide range of typical applications and take into consideration factors which can adversely affect performance. Please contact us with specific application details where load ratings are critical.
- Stock items listed have a bright zinc-plate finish.
- Refer to 1319 'ULTRALOCK' (page b28) for locking, companion slide.
- Optional bracketry available on request.
- Recommended fixing with M5 screws.
- All fixing holes must be used to achieve maximum load rating.
- **Caution - this slide must never be used as a pull-out step, platform or any other application supporting human weight.**

Walsall: 01922 471000 Heywood: 01706 692110 Romsey: 01794 525870 www.albert-jagger.co.uk

albert Jagger limited

Accuride: Telescopic Slides

THREE BEAM SLIDES - *'ULTRALOCK'*

- Load rating up to 227kg per pair
- 100% extension
- 19.1mm slide thickness
- Lock-in facility
- Lock-out facility with lever lock release
- 10,000 cycles tested

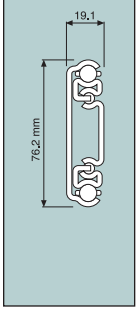

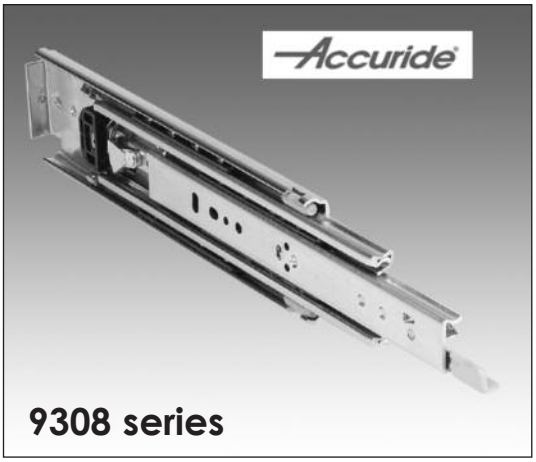

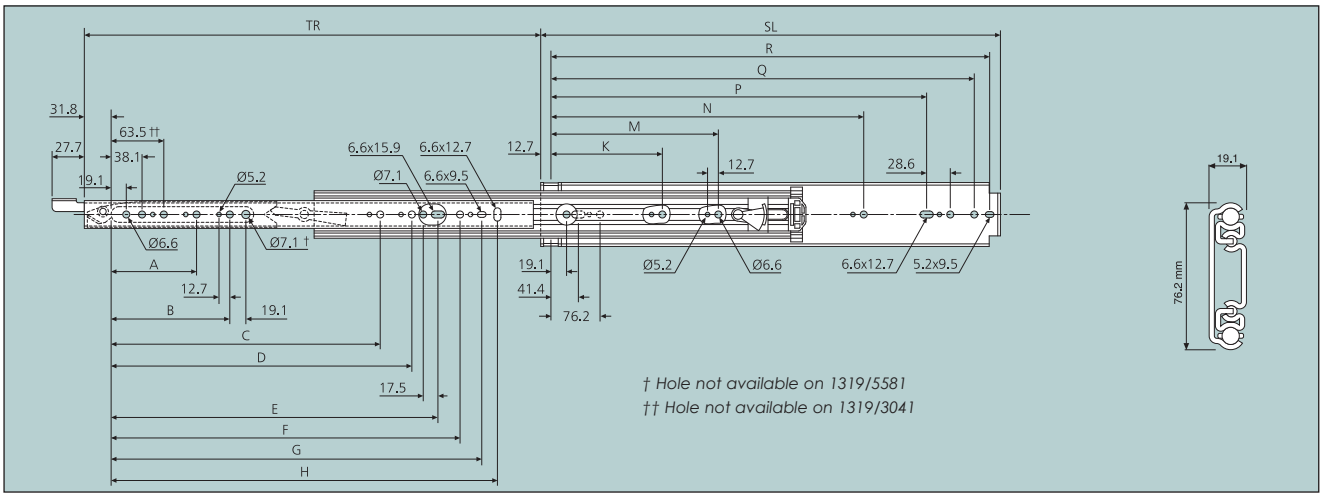

† Hole not available on 1319/5581
†† Hole not available on 1319/3041

Part No.	SL	Travel	A	B	C	D	E	F	G	H	J	K	M	N	P	Q	R	Weight	Load
1319/3041*	304.8	304.8	-	-	-	-	-	153.9	179.3	198.4	-	-	-	-	203.2	260.4	279.4	1.46	227
1319/3551*	355.6	355.6	-	-	-	-	-	204.7	230.1	249.2	-	-	-	-	254.0	311.2	330.2	1.71	227
1319/4061*	406.4	406.4	-	-	-	-	-	255.5	280.9	300.0	-	-	-	-	304.8	362.0	381.0	2.23	227
1319/4571*	457.2	457.2	127.0	-	-	-	-	306.3	331.7	350.8	-	-	-	-	355.6	412.8	431.8	2.46	227
1319/5081*	508.0	508.0	127.0	-	-	-	296.9	357.1	382.5	401.6	-	-	-	-	406.4	463.6	482.6	2.58	227
1319/5581*	558.8	558.8	127.0	190.5	-	-	347.7	407.9	433.3	452.4	-	-	-	-	457.2	514.4	533.4	2.70	227
1319/6091*	609.6	609.6	127.0	190.5	-	-	398.5	458.7	484.1	503.2	-	-	-	-	508.0	565.2	584.2	3.28	227
1319/6601*	660.4	660.4	127.0	190.5	-	-	449.3	509.5	534.9	554.0	-	-	-	-	558.8	616.0	635.0	3.55	227
1319/7111*	711.2	711.2	127.0	190.5	-	-	500.1	560.3	585.7	604.8	-	-	-	-	609.6	666.8	685.8	3.74	227
1319/7621*	762.0	762.0	127.0	190.5	-	-	550.9	611.1	636.5	655.6	-	235.0	-	501.7	660.4	717.6	736.6	3.85	222
1319/8121*	812.8	812.8	127.0	190.5	-	-	601.7	661.9	687.3	706.4	-	235.0	-	552.5	711.2	768.4	787.4	3.96	218
1319/8631*	863.6	863.6	127.0	190.5	-	520.7	652.5	712.7	738.1	757.1	-	235.0	-	-	762.0	819.1	838.2	4.36	213
1319/9141*	914.4	914.4	127.0	190.5	368.3	520.7	703.3	763.5	788.9	807.9	-	235.0	-	-	812.8	869.9	889.0	4.60	209
1319/10161*	1016.0	1016.0	127.0	190.5	368.3	-	804.9	865.1	890.5	909.5	-	235.0	-	755.7	914.4	971.5	990.6	5.13	200
1319/10661*	1066.8	1066.8	127.0	190.5	368.3	-	855.7	915.9	941.3	960.4	-	235.0	-	806.5	965.2	1022.4	1041.4	5.40	195
1319/12191*	1219.2	1219.2	127.0	190.5	368.3	520.7	1008.1	1068.3	1093.7	1112.8	-	235.0	-	958.9	1117.6	1174.8	1193.8	6.05	182
1319/15241*	1524.0	1524.0	127.0	190.5	368.3	520.7	1312.9	1373.1	1398.5	1417.8	-	235.0	596.9	958.9	1422.4	1479.5	1498.6	7.56	154

Notes:
- All dimensions in mm. • All weights in kg. • Load ratings quoted per pair.
- Load ratings shown are representative of a wide range of typical applications and take into consideration factors which can adversely affect performance. Please contact us with specific application details where load ratings are critical.
- Stock items listed have a bright zinc-plate finish.
- **1319 (9308) slides are handed, please specify 'L' for left hand locking or 'R' for right hand locking, eg. 1319/3041-R**
- Optional bracketry available on request.
- Refer to 1316 'ULTRASLIDE' (page b27) for non locking, companion slide
- Recommended fixing with M5 & M6 screws.
- All fixing holes must be used to achieve maximum load rating.
- **Caution - this slide must never be used as a pull-out step, platform or any other application supporting human weight.**

www.albert-jagger.co.uk Walsall: 01922 471000 Heywood: 01706 692110 Romsey: 01794 525870

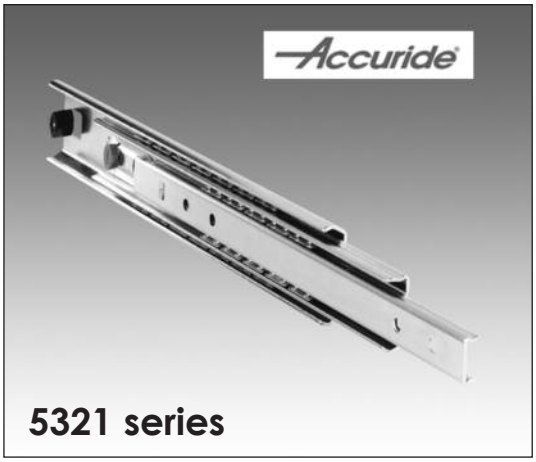

THREE BEAM SLIDES - *'SUPERSLIDE'*

- Load rating up to 180kg per pair
- 100%+ extension
- 19.1mm slide thickness
- Hold-in facilty
- 10,000 cycles tested

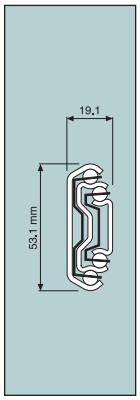

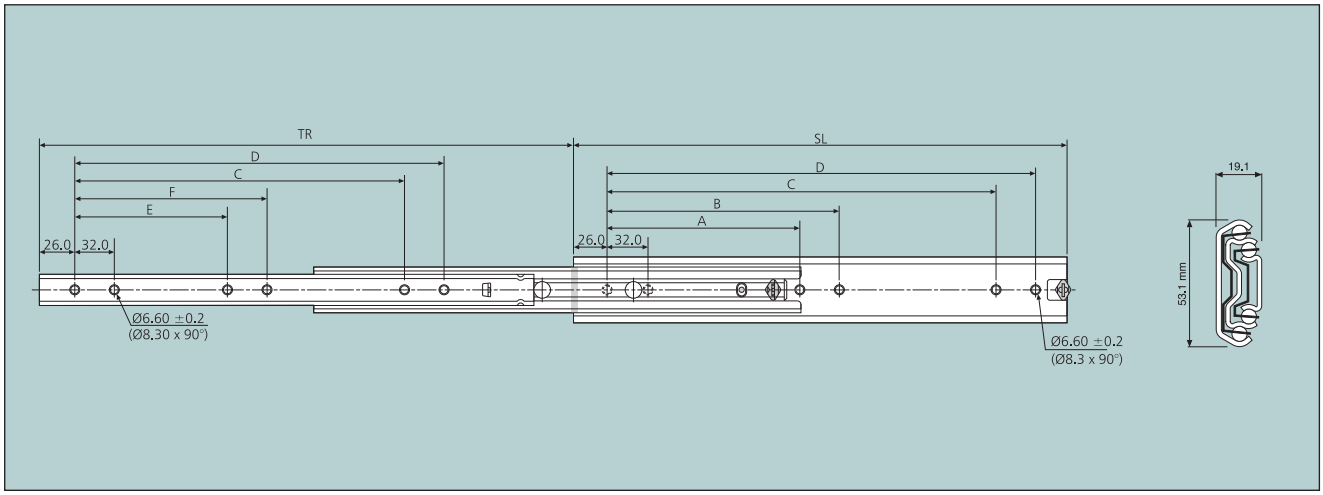

Part No.	SL	Travel	A	B	C	D	E	F	Weight	Load
1308/030*	300	323.5	-	-	192	224	-	-	1.80	140
1308/350	350	373.5	-	-	224	256	-	-	2.07	150
1308/400	400	423.5	160	192	288	320	128	160	2.37	160
1308/450	450	473.5	160	192	320	352	128	160	2.70	170
1308/500	500	523.5	192	224	384	416	160	192	3.00	180
1308/550	550	573.5	192	224	416	448	160	192	3.31	170
1308/600	600	623.5	256	288	480	512	192	256	3.62	160
1308/700	700	723.5	288	320	576	608	256	288	4.26	130
1308/790	790	803.5	352	384	672	704	320	352	4.80	100
1308/900*	900	923.5	448	480	768	800	384	416	5.57	90
1308/1000*	1000	1023.5	480	512	864	896	448	480	6.19	80
1308/1100*	1100	1123.5	544	576	992	1024	480	512	6.81	70

Notes:
- All dimensions in mm. • All weights in kg. • Load ratings quoted per pair.
- Load ratings shown are representative of a wide range of typical applications and take into consideration factors which can adversely affect performance. Please contact us with specific application details where load ratings are critical.
- * Non stock items subject to lead time and minimum order quantities - call for details.
- Stock items listed have a bright zinc-plate finish.
- Optional bracketry available on request.
- Recommended fixing with M5 countersunk/6mm countersunk euro screws.

Accuride: Telescopic Slides

albert Jagger limited

Accuride: Telescopic Slides

THREE BEAM '*MOBILE EQUIPMENT*' SLIDES

- Load rating up to 180kg per pair
- 100%+ extension
- Heavy duty construction
- Vibration resistant shock blocks
- Protective shroud encased ball track
- Mounting plates on inner & outer members
- 10,000 cycles tested

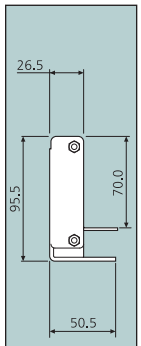

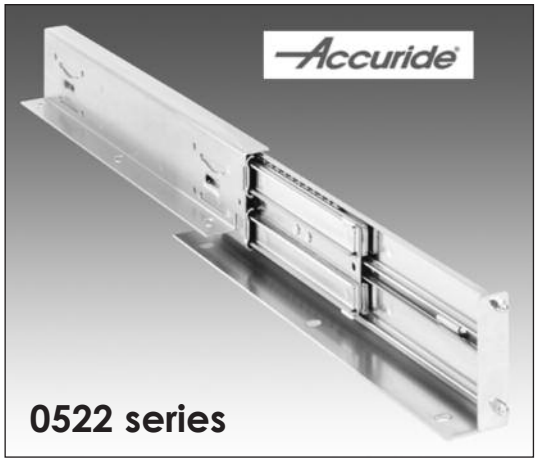

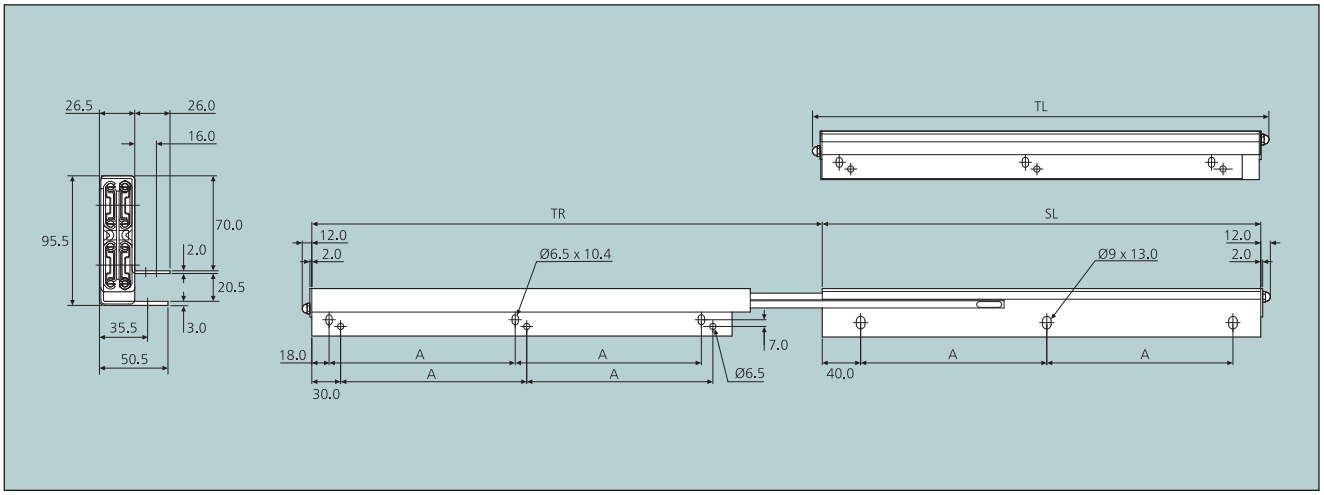

Part No.	SL	TL	Travel	A	Weight	Load
1307/4571 - LH 1307/4572 - RH	457	481	534.0	194.0	9.57	180
1307/6001 - LH 1307/6002 - RH	600	624	625.0	265.0	12.7	180
1307/9001 - LH* 1307/9002 - RH*	900	924	907.0	276.5	19.25	150

Notes:
- All dimensions in mm. • All weights in kg. • Load ratings quoted per pair & based on a 600mm slide in a 500mm drawer, cycled 10,000 times.
- Load ratings shown are representative of a wide range of typical applications and take into consideration factors which can adversely affect performance. Please contact us with specific application details where load ratings are critical.
- * Non stock items subject to lead time and minimum order quantities - call for details.
- Stock items listed have a bright zinc-plate finish.
- Recommended fixing with M6 screws on inner extending member & M8 screws on outer fixed member.
- All fixing holes must be used to achieve maximum load rating.
- **Caution - this slide must never be used as a pull-out step, platform or any other application supporting human weight.**

www.albert-jagger.co.uk Walsall: 01922 471000 Heywood: 01706 692110 Romsey: 01794 525870

Ojop: Overcentre Fasteners

For suitable fastener and hook combinations see table below.

FORGED TOGGLE FASTENERS		
9100/102C	Zinc plated, non-locking	
9100/202C	Zinc plated, locking	
	64 mm (2.5")	*Weight 110g/3.9oz*
9100/103C	Zinc plated, non-locking	
9100/203C	Zinc plated, locking	
	82 mm (3.2")	*Weight 210g/7.4oz*
9100/403C	Zinc plated, locking	
9100/403CSS	316 Stainless steel, locking	
	115 mm (4.5")	*Weight 230g/8.1oz*
9100/503C	Zinc plated, locking	
	82 mm (3.2")	*Weight 200g/7.1oz*

102, 103 FASTENERS ***ALL DIMENSIONS IN MM*** ***202, 203 FASTENERS***

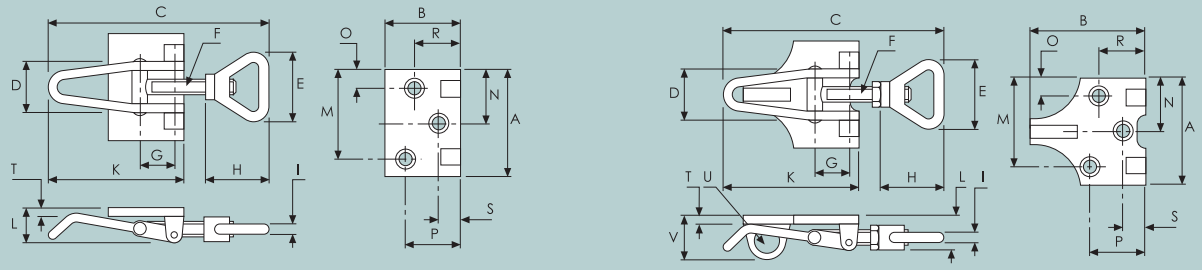

NO.	A	B	C	D	E	F	G	H	I	K	L	M	N	O	P	R	S	T	U	V
102	51	36	99-114	18	38	M6	12	36	5	64	15	40	25	10	25	20	8	3	/	/
103	71	41	119-140	23	48	M8	16	46	6	81	20	58	35	12	28	23	10	4	/	/
202	51	46	99-114	18	38	M6	12	36	5	64	15	42	25	8	27	25	17	3	10	20
203	61	56	119-140	23	48	M8	16	46	6	81	20	50	30	10	37	30	22	4	13	25

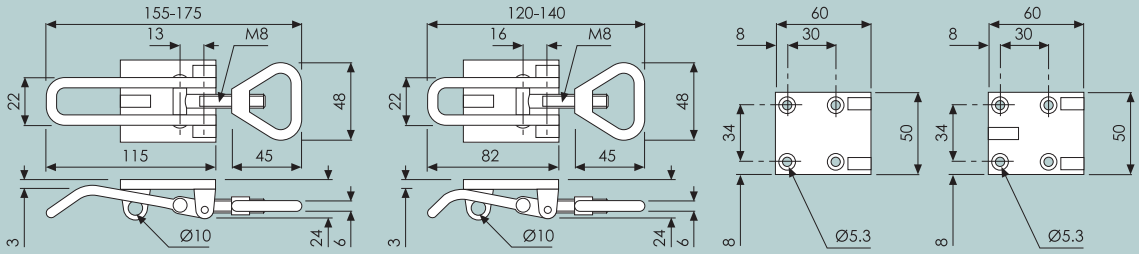

403 FASTENER ***503 FASTENER*** ***403 PLATE*** ***503 PLATE***

Fasteners - Hook Combinations

FASTENER	RECOMMENDED MAXIMUM LOAD	
	Kg	POUNDS
701	100	220
702	300	660
703	500	1100
102	300	660
103	500	1100
202	300	660
203	500	1100
403	600	1320
503	500	1100

FASTENER/HOOK COMBINATIONS				
FASTENER	HOOK		HOOK	
701	15, 30		50	
702	31		10	
703T	16		17	
703R	22, 41		20	
102	31		10	
103	22, 41		20	
202	31		10	
203	22, 41		20	
403	22, 41		20	
503	22, 41		20	

Ojop: Overcentre Fasteners

701 SERIES OVERCENTRE FASTENERS	
9100/701SC	Zinc plated, non-locking
9100/701SCSS	316 Stainless steel, non-locking
	Weight 40g/1.3oz
9100/701LC	Zinc plated, locking
9100/701LCSS	316 Stainless steel, locking
	Weight 40g/1.3oz
HOOKS HOOKS HOOKS HOOKS HOOKS HOOKS HOOKS	
9100/15C	Zinc plated
	Weight 10g/0.4oz
9100/30C	Zinc plated, triangular
9100/30CSS	316 Stainless steel, triangular
	Weight 70g/2.6oz
9100/50C	Zinc plated, 'S' hook
9100/50CSS	316 Stainless steel, 'S' hook
	Weight 20g/0.6oz

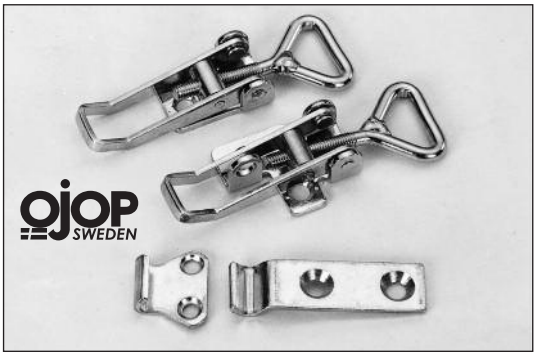

For fastener - hook combinations & load ratings refer table on page b31..

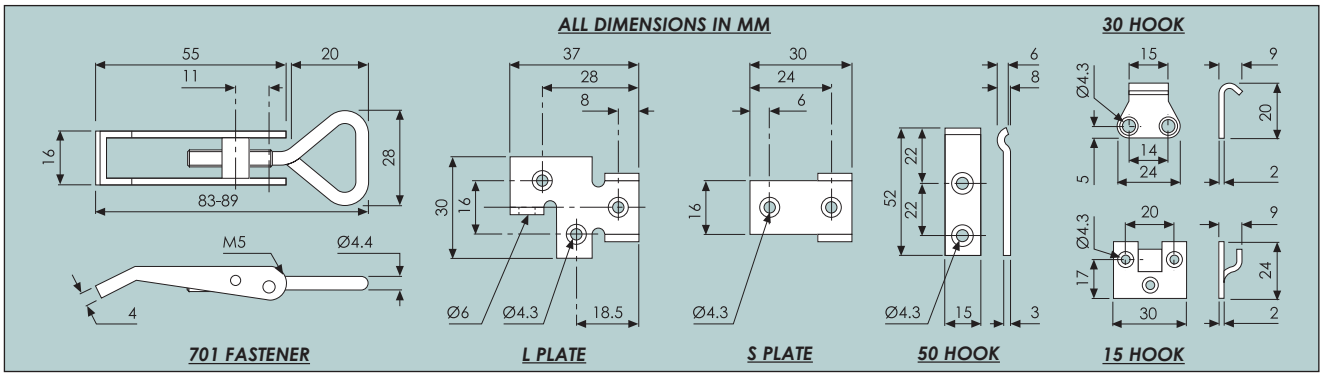

702 SERIES OVERCENTRE FASTENERS	
9100/702SC	Zinc plated, non-locking
9100/702SCSS	316 Stainless steel, non-locking
	Weight 70g/2.6oz
9100/702LC	Zinc plated, locking
9100/702LCSS	316 Stainless steel, locking
	Weight 80g/2.8oz
HOOKS HOOKS HOOKS HOOKS HOOKS HOOKS HOOKS	
9100/31C	Zinc plated, triangular
9100/31CSS	316 Stainless steel, triangular
	Weight 10g/0.3oz
9100/10C	Zinc plated, 'S' hook
9100/10CSS	316 Stainless steel, 'S' hook
	Weight 30g/1.1oz

For fastener - hook combinations & load ratings refer table on page b31.

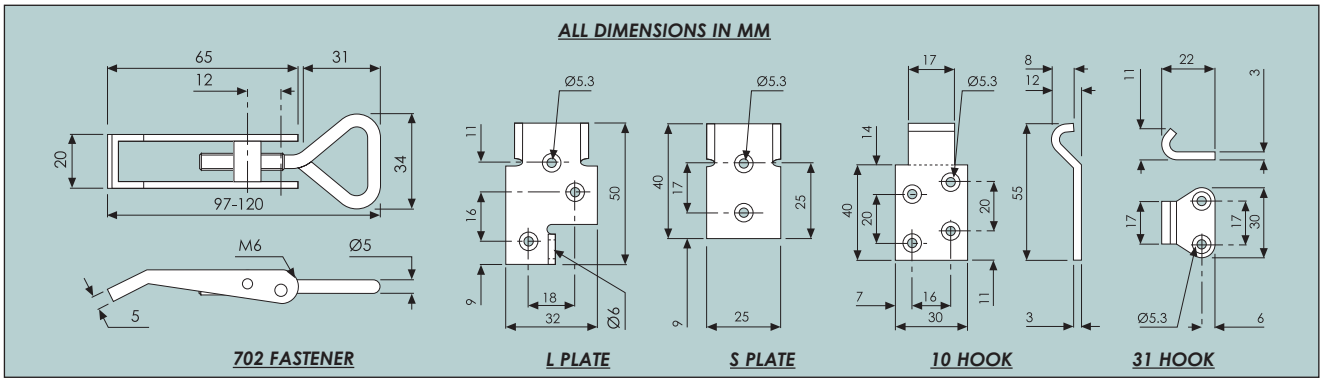

For fastener - hook combinations & load ratings refer table on page b31.

703 SERIES OVERCENTRE FASTENERS	
9100/703RC	Zinc plated, non-locking
9100/703RCSS	316 Stainless steel, non-locking
	Weight 210g/7.2oz
9100/703RLC	Zinc plated, locking
9100/703RLSS	316 Stainless steel, locking
	Weight 200g/7oz
9100/703TLC	Zinc plated, locking
	Weight 200g/7oz
I HOOKS I HOOKS I HOOKS I HOOKS I HOOKS I HOOKS I HOOKS I	
9100/16C	Zinc plated
	Weight 40g/1.4oz
9100/17C	Zinc plated
	Weight 70g/2.5oz
9100/22C	Zinc plated
	Weight 80g/2.7oz
9100/41C	Zinc plated, triangular
9100/41CSS	316 Stainless steel, triangular
	Weight 30g/1oz
9100/20C	Zinc plated, 'S' hook
9100/20CSS	316 Stainless steel, 'S' hook
	Weight 80g/2.7oz

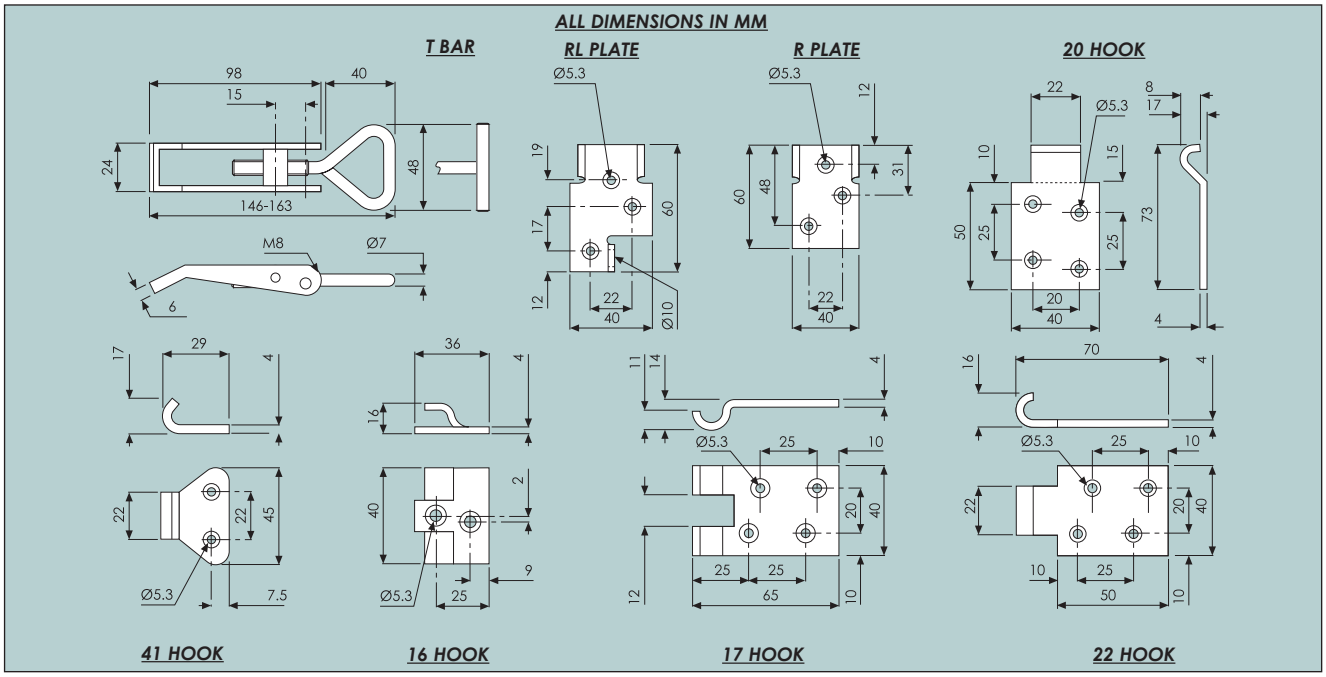

Ojop: Overcentre Fasteners

Ojop: Overcentre Fasteners

9100/7031	**OVERCENTRE FASTENER**	**Weight 230g/8.1oz**
	Black chromate finish with a plastic coated finger pull. Stainless steel safety catch	
9100/41BLK	**HOOK**	**Weight 30g/1oz**
	Black chromate finish. Suitable for 180° (flat) applications	
9100/41CSS	**HOOK**	**Weight 30g/1oz**
	316 Stainless steel. Suitable for 180° (flat) applications	
9100/20CSS	**HOOK**	**Weight 80g/2.7oz**
	316 Stainless steel. Suitable for 90° applications	

ALL DIMENSIONS IN MM

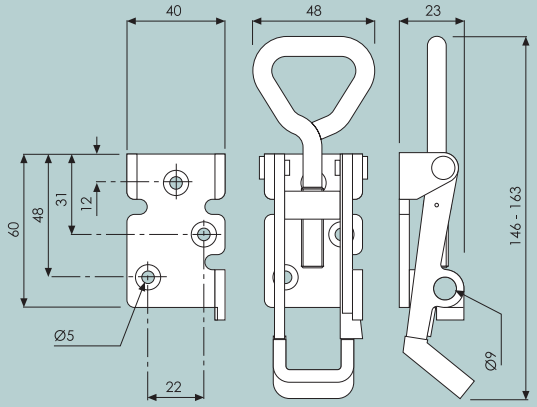

9100/7031 FASTENER

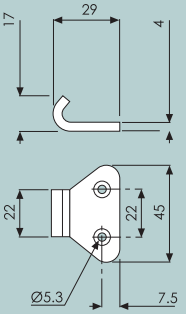

9100/41BLK HOOK
9100/41CSS HOOK

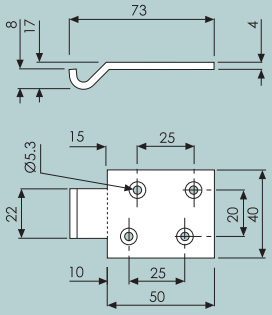

9100/20CSS HOOK

Overcentre Fasteners

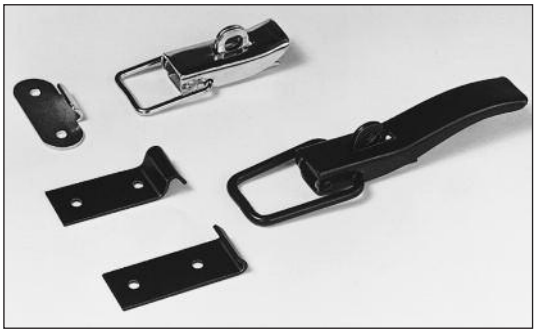

Left: top - 2676/004
centre - 2665/004
bottom - 2665/003

Right: top - 2676/003
centre - 2665/001

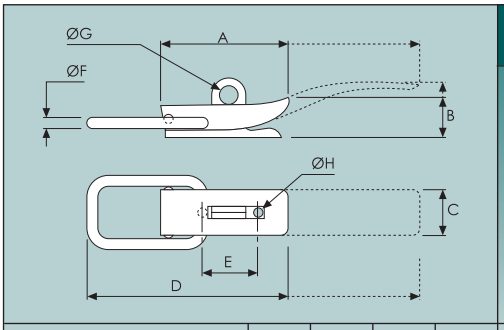

OVER-CENTRE TOGGLE FASTENER

Pressed steel with various finishes.
1338 = small toggles
2676 = short toggles
2665 = long toggles

		A	B	C	D	E	F	G	H
1338/001	**Locking, self-colour**					**Weight 50g/1.8oz**			
1338/003	**Locking, chrome-plated**								
METRIC	*(mm)*	*52*	*15*	*18*	*68*	*27*	*4*	*8*	*4*
IMPERIAL	*(ins)*	*2.10*	*0.59*	*0.71*	*2.68*	*1.06*	*0.16*	*0.32*	*0.16*
2676/001	**Locking, self-colour**					**Weight 90/3.2oz**			
2676/003	**Locking, chrome-plated**								
METRIC	*(mm)*	*62*	*22*	*25.4*	*94*	*35*	*4*	*11*	*5.5*
IMPERIAL	*(ins)*	*2.44*	*0.87*	*1.00*	*3.7*	*1.38*	*0.16*	*0.43*	*0.22*
2665/001	**Locking, powder coated**					**Weight 140g/4.5oz**			
2665/002	**Non-locking, powder coated**								
2665/011	**Locking, self-colour**								
2665/012	**Non-locking, self-colour**								
METRIC	*(mm)*	*129*	*27*	*25.4*	*170*	*35*	*5.5*	*11.5*	*5.5*
IMPERIAL	*(ins)*	*5.10*	*1.06*	*1.00*	*6.70*	*1.38*	*0.22*	*0.45*	*0.22*

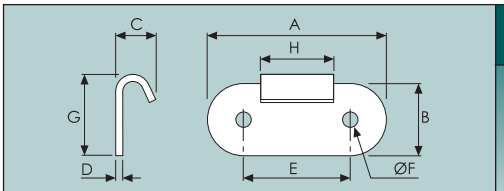

HOOK

Pressed mild steel.

		A	B	C	D	E	F	G	H
1338/002	**Self-colour**					**Weight 10g/0.4oz**			
1338/004	**Chrome-plated**								
METRIC	*(mm)*	*44.5*	*13*	*11*	*2*	*31.5*	*3.7*	*15*	*19*
IMPERIAL	*(ins)*	*1.75*	*0.51*	*0.43*	*0.08*	*1.24*	*0.15*	*0.59*	*0.75*
2676/002	**Self-colour**					**Weight 30g/1.1oz**			
2676/004	**Chrome-plated**								
METRIC	*(mm)*	*59*	*22*	*12*	*2*	*36.5*	*5.5*	*26*	*23*
IMPERIAL	*(ins)*	*2.32*	*0.87*	*0.47*	*0.08*	*1.44*	*0.22*	*1.02*	*0.91*

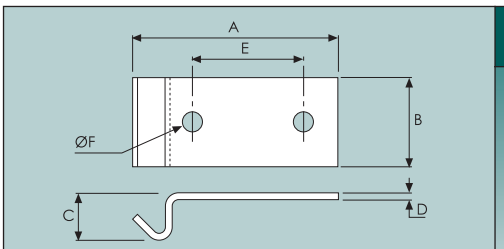

HOOK

Pressed mild steel.

		A	B	C	D	E	F	G	H
2665/004	**Black powder-coated**					**Weight 30g/1.1oz**			
2665/014	**Self-colour**								
METRIC	*(mm)*	*66*	*26*	*14.5*	*2*	*35*	*5.5*		
IMPERIAL	*(ins)*	*2.60*	*1.02*	*0.57*	*0.08*	*1.38*	*0.22*		

Overcentre Fasteners

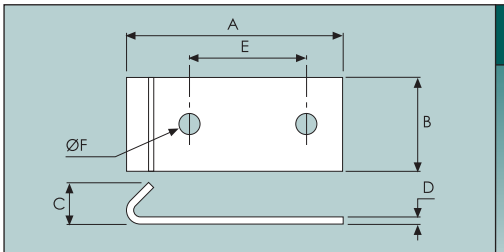

HOOK

Pressed mild steel.

		A	B	C	D	E	F	G	H
2665/003	**Black powder-coated**					**Weight 30g/1.1oz**			
2665/013	**Self-colour**								
METRIC	*(mm)*	*66*	*26*	*12*	*2*	*35*	*5*		
IMPERIAL	*(ins)*	*2.60*	*1.02*	*0.42*	*0.08*	*1.38*	*0.2*		

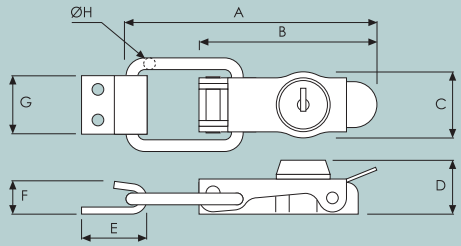

OVERCENTRE TOGGLE FASTENER

Zinc plated, mild steel.
Locking with two keys supplied.
Padlock facility on toggle (padlock not supplied).

		A	B	C	D	E	F	G	H
2663/0100	**Toggle fastener**					**Weight 150g/5.3oz**			
2663/0101	**Hook to suit**					**Weight 24g/0.9oz**			
METRIC	*(mm)*	*106*	*76.0*	*28.0*	*26.0*	*28.0*	*14.0*	*25.0*	*5.0*
IMPERIAL	*(ins)*	*4.17*	*2.99*	*1.10*	*1.02*	*1.10*	*0.55*	*0.95*	*0.20*

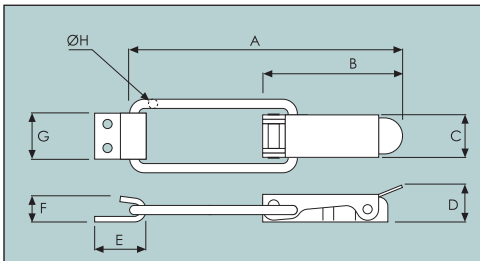

OVERCENTRE TOGGLE FASTENER

Zinc plated, mild steel.
Padlock facility on toggle (padlock not supplied).

		A	B	C	D	E	F	G	H
2663/7040	**Toggle fastener**					**Weight 130g/4.6oz**			
2663/0101	**Hook to suit**					**Weight 24g/0.9oz**			
METRIC	*(mm)*	*160*	*76.0*	*24.0*	*22.0*	*28.0*	*14.0*	*25.0*	*5.0*
IMPERIAL	*(ins)*	*6.30*	*2.99*	*0.95*	*0.87*	*1.10*	*0.55*	*0.95*	*0.20*

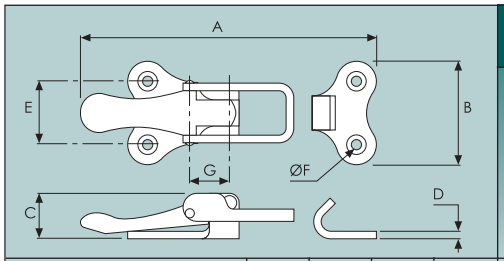

OVERCENTRE TOGGLE FASTENER

Polished chrome plate finish.
Complete with hook.
Dimension A, fixed length.

		A	B	C	D	E	F	G	H
2695/003						**Weight 60g/2.1oz**			
METRIC	*(mm)*	*90*	*34*	*15*	*2.5*	*22*	*4*	*10*	
IMPERIAL	*(ins)*	*3.54*	*1.34*	*0.59*	*0.1*	*0.87*	*0.16*	*0.39*	

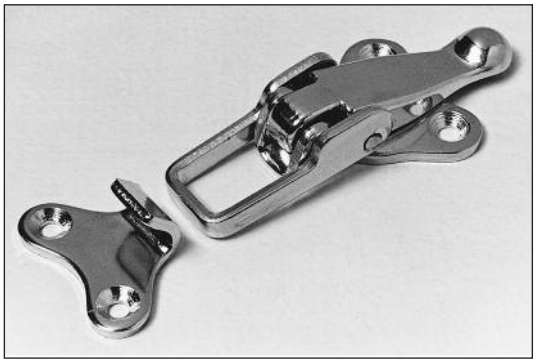

Top left - 0660/002
0660/202

Top right - 0660/001
0660/101

Centre - 0662/001

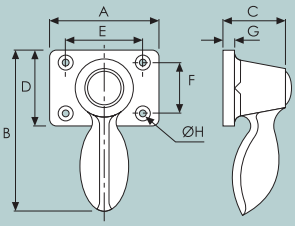

GRAVELLY FASTENER

Brass retainer and square base- plate.

	A	B	C	D	E	F	G	H
0660/001	**Chrome plated**				**Weight 50g/1.8oz**			
METRIC (mm)	32	47	20	22	23	14	3	4
IMPERIAL (ins)	1.26	1.85	0.80	0.87	0.91	0.55	0.12	0.16
0660/002	**Chrome plated**				**Weight 80g/2.8oz**			
METRIC (mm)	39	61	19	25.4	29	16	3	4
IMPERIAL (ins)	1.54	2.40	0.75	1.00	1.14	0.63	0.12	0.16

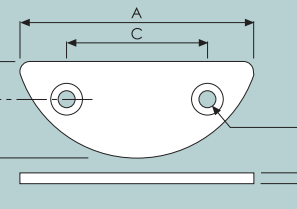

PLATES

Mild steel plate.

	A	B	C	D	E	F	G	H
0660/101	**Chrome plated**				**Weight 10g/0.4oz**			
METRIC (mm)	46	23	21	2.5	4	9		
IMPERIAL (ins)	1.81	0.91	0.83	0.10	0.16	0.35		
0660/202	**Chrome plated**				**Weight 20g/0.8oz**			
METRIC (mm)	64.5	27	37.5	2.5	4	10		
IMPERIAL (ins)	2.54	1.06	1.48	0.10	0.16	0.39		

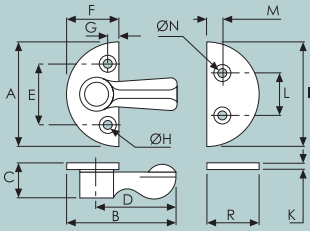

GRAVELLY FASTENER

Supplied complete with plate.
Chrome plate on die-cast alloy.

	A	B	C	D	E	F	G	H
0662/001	**Fastener**				**Weight 70g/2.5oz**			
METRIC (mm)	47.5	51	18	38	28	24	9	4
IMPERIAL (ins)	1.87	2	0.70	1.50	1.10	0.95	0.35	0.16
	I	J	K	L	M	N		
Plate								
METRIC (mm)	47.5	24	2.7	28	9	4		
IMPERIAL (ins)	1.87	0.97	0.11	1.10	0.35	0.16		

Bonnet Fasteners

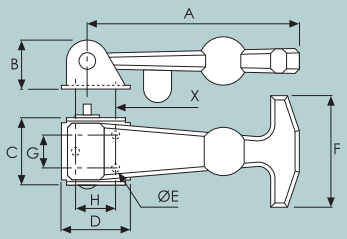

BONNET FASTENER

EPDM (55° shore) hook with zinc plated bracket & clip (see below).

	A	B	C	D	E	F	G	H
5300/001	**Complete assembly**				**Weight 120g/4.2oz**			
METRIC (mm)	*112*	*14*	*38*	*31*	*4*	*56*		
IMPERIAL (ins)	*4.41*	*0.55*	*1.50*	*1.22*	*0.16*	*2.21*		

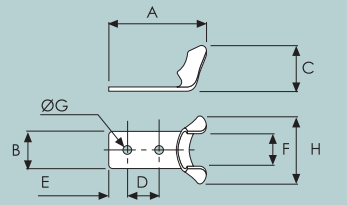

CLIP

Supplied with 5300/001 (see above).

	A	B	C	D	E	F	G	H
METRIC (mm)	*53*	*20*	*28*	*16*	*10*	*14*	*4.6*	*34*
IMPERIAL (ins)	*2.09*	*0.79*	*1.10*	*0.63*	*0.39*	*0.55*	*0.18*	*1.34*

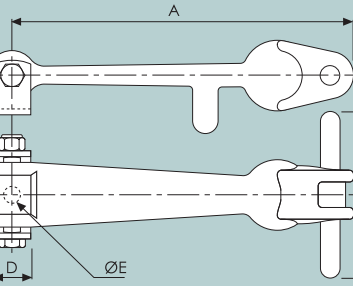

BONNET FASTENER

EPDM (55° shore) hook with zinc plated steel bracket & clip (see below).

	A	B	C	D	E	F	G	H
5302/001					**Weight 190g/6.7oz**			
METRIC (mm)	*138*	*20*	*42*	*19*	*9*	*84*		
IMPERIAL (ins)	*5.43*	*0.79*	*1.65*	*0.75*	*0.35*	*3.31*		
5303/001					**Weight 200g/7.1oz**			
METRIC (mm)	*190*	*20*	*42*	*19*	*9*	*84*		
IMPERIAL (ins)	*7.48*	*0.79*	*1.65*	*0.75*	*0.35*	*3.31*		

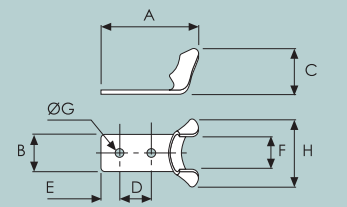

CLIP

Supplied with 5302 & 5303 fasteners, (see above).

	A	B	C	D	E	F	G	H
METRIC (mm)	*50*	*19*	*33*	*25*	*6*	*20*	*6.5*	*40*
IMPERIAL (ins)	*1.97*	*0.75*	*1.30*	*0.98*	*0.24*	*0.79*	*0.26*	*1.58*

Top- 5302/001, complete.
Centre - 5303/001, complete.
Bottom- 5300/001, complete.

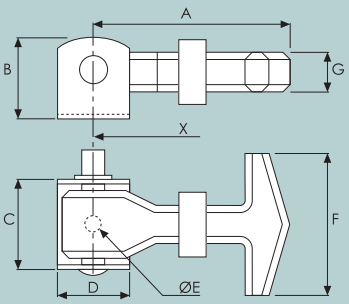

RUBBER BONNET FASTENER

Rubber hook with steel bracket & clip (see below).
Maximum extension from relaxed to tension should be 10%. Hence, the distance between centres 'X & X' should be between 16 - 19 mm.

	A	B	C	D	E	F	G	H
5301/001 Zinc plated					**Weight 50g/1.8oz**			
5301/003 Stainless steel								
METRIC (mm)	*54.5*	*21.0*	*23.0*	*20.0*	*5.00*	*39.0*	*10.0*	
IMPERIAL (ins)	*2.15*	*0.83*	*0.91*	*0.80*	*0.20*	*1.54*	*0.40*	

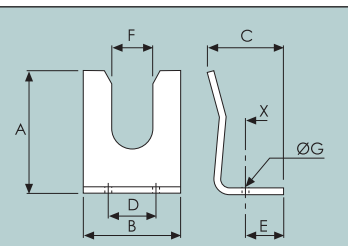

CLIP

Supplied with 5301 bonnet fasteners (see above).

	A	B	C	D	E	F	G	H
METRIC (mm)	*31*	*25*	*22*	*12*	*10*	*10*	*4*	
IMPERIAL (ins)	*1.22*	*1*	*0.87*	*0.47*	*0.4*	*0.4*	*0.16*	

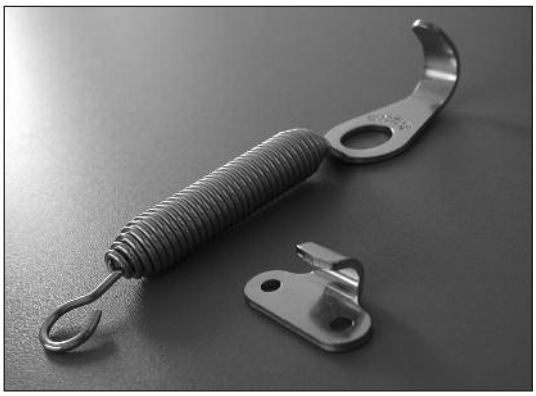

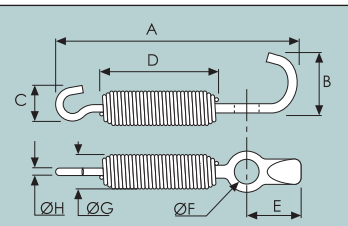

SPRING BONNET FASTENER

Nickel plated, carbon steel.
Supplied complete with hook (see below).

	A	B	C	D	E	F	G	H
4529/002					**Weight 41g/1.5oz**			
METRIC (mm)	*135*	*25.4*	*14.0*	*63.0*	*32.0*	*14.5*	*13.5*	*2.00*
IMPERIAL (ins)	*5.32*	*1.00*	*0.55*	*2.48*	*1.26*	*0.57*	*0.53*	*0.08*

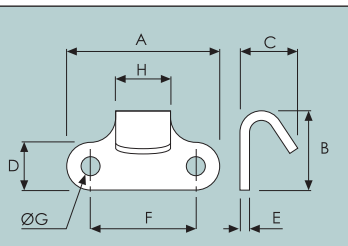

HOOK

Nickel plated, carbon steel.
Supplied complete with 4529/002 bonnet fastener (see above).

	A	B	C	D	E	F	G	H
					Weight 7g/0.3oz			
METRIC (mm)	*32.0*	*17.0*	*12.0*	*11.0*	*2.00*	*21.0*	*4.20*	*11.0*
IMPERIAL (ins)	*1.26*	*0.67*	*0.47*	*0.43*	*0.08*	*0.83*	*0.17*	*0.43*

Hasp & Staple

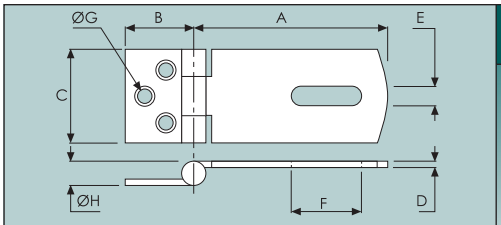

HASP & STAPLE

Black paint finish.
Part numbers stated include staple.
For staple dimensions - see below.

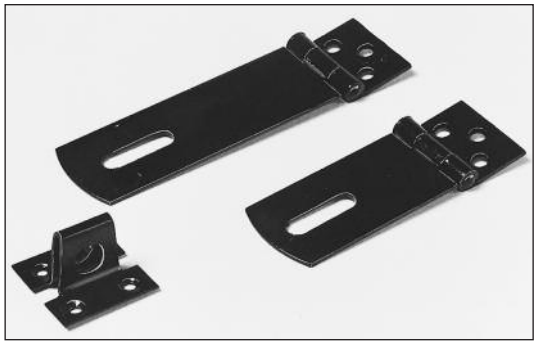

	A	B	C	D	E	F	G	H
2948/101	**76mm (3") hasp**				**Weight 70g/2.5oz**			
METRIC (mm)	*81*	*29*	*38*	*2*	*7*	*30*	*5*	*10*
IMPERIAL (ins)	*3.19*	*1.14*	*1.5*	*0.08*	*0.28*	*1.18*	*0.2*	*0.4*
2948/102	**114mm (4 1/2") hasp**				**Weight 100g/3.5oz**			
METRIC (mm)	*119*	*29*	*38*	*2*	*7*	*30*	*5*	*10*
IMPERIAL (ins)	*4.69*	*1.14*	*1.5*	*0.08*	*0.28*	*1.18*	*0.2*	*0.4*

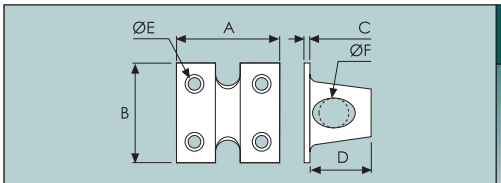

STAPLE

Black powder coated.
Supplied with 2948/101 & 102.

	A	B	C	D	E	F	G	H
					Weight 20g/0.7oz			
METRIC (mm)	*40*	*38*	*2*	*24*	*5*	*11*		
IMPERIAL (ins)	*1.58*	*1.5*	*0.08*	*0.95*	*0.2*	*0.43*		

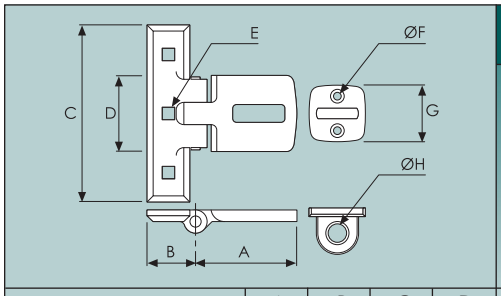

SHUTTER HASP & STAPLE

Cast iron with black powder-coated finish.

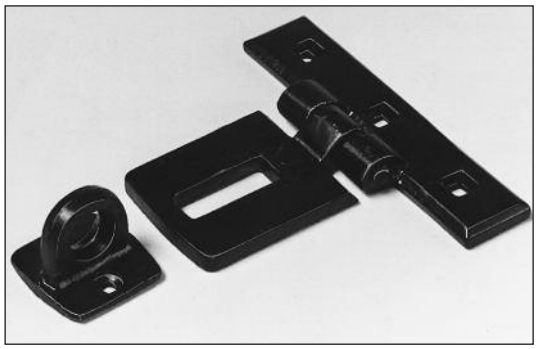

	A	B	C	D	E	F	G	H
2950/001	**Hasp**				**Weight 330g/11.7oz**			
2950/002	**Staple**				**Weight 70g/2.5oz**			
METRIC (mm)	*70*	*34*	*122*	*50*	*8*	*5*	*38*	*14*
IMPERIAL (ins)	*2.76*	*1.34*	*4.8*	*1.97*	*0.32*	*0.2*	*1.5*	*0.55*

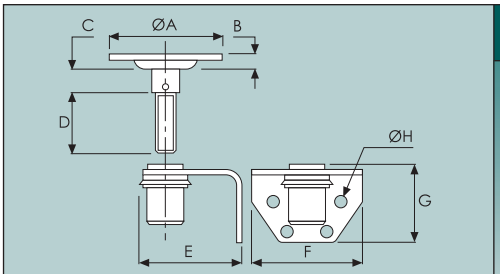

FLOOR-TRAP FASTENER

Zinc plated steel.
2171 = 4 x ø5mm fixing holes.
2172 = 2 x ø5mm fixing holes.

	A	B	C	D	E	F	G	H
2171/002 **12mm thread** **Weight 200g/7.1oz**								
2172/002 **Acme thread**								
METRIC (mm)	*57.5*	*9.5*	*5*	*31*	*50*	*54*	*34*	*4.5*
IMPERIAL (ins)	*2.26*	*0.37*	*0.2*	*1.22*	*1.97*	*2.13*	*1.34*	*0.18*

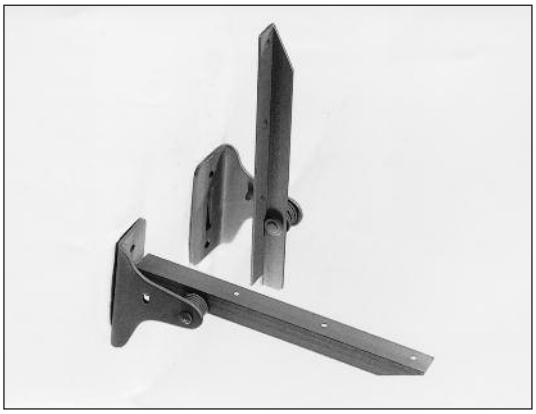

Pairs are intended to take a seat cushion up to 450mm wide which does not project beyond the front edge of the supports by more than 25mm.

They are designed to take the weight of an average person and shock loading is to be avoided.

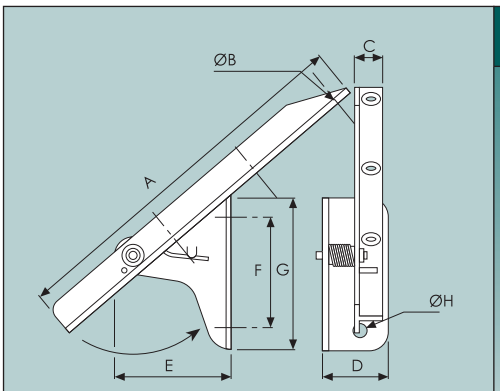

'TIP-UP' SEAT FITTINGS

Zinc-plated, mildsteel.
Spring loaded.

	A	B	C	D	E	F	G	H
0288/003 **Left hand (shown)** **Weight 730g/1.6lb**								
0288/004 **Right hand**								
METRIC (mm)	*305*	*5*	*25*	*56*	*92*	*89*	*127*	*8*
IMPERIAL (ins)	*12.0*	*0.2*	*1*	*2.21*	*3.62*	*3.50*	*5.00*	*0.32*

albert Jagger limited

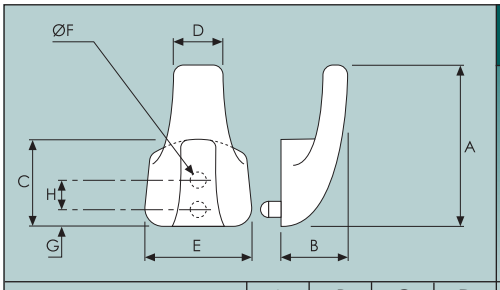

SINGLE COAT HOOK

Black plastic with a textured finish. Concealed fixing.

	A	B	C	D	E	F	G	H
2987/005					**Weight 10g/0.4oz**			
METRIC (mm)	*50.8*	*19*	*25.4*	*18*	*34*	*5*	*5*	*11.5*
IMPERIAL (ins)	*2.00*	*0.75*	*1.00*	*0.71*	*1.34*	*0.20*	*0.20*	*0.45*

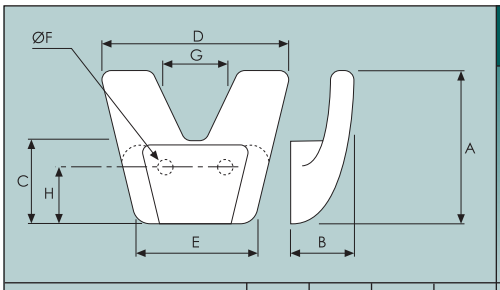

DOUBLE COAT HOOK

Black plastic with a textured finish. Concealed fixing.

	A	B	C	D	E	F	G	H
2987/006					**Weight 15g/0.53oz**			
METRIC (mm)	*50.8*	*19*	*25.4*	*60*	*40*	*5*	*20*	*17*
IMPERIAL (ins)	*2.00*	*0.75*	*1.00*	*2.36*	*1.58*	*0.20*	*0.79*	*0.67*

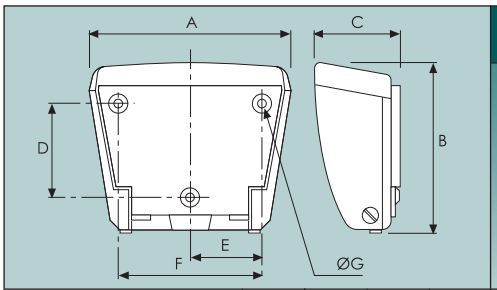

ASHTRAYS

Black plastic mouldings with chrome plated lid & stubber. Fixing holes through back plate.

	A	B	C	D	E	F	G	H
2556/001	**Tilt to empty**				**Weight 160g/5.7oz**			
2556/002	**Remove to empty**							
METRIC (mm)	*102*	*89*	*46*	*48*	*36.5*	*73*	*4.5*	
IMPERIAL (ins)	*4.02*	*3.5*	*1.81*	*1.89*	*1.44*	*2.87*	*0.18*	

www.albert-jagger.co.uk Walsall: 01922 471000 Heywood: 01706 692110 Romsey: 01794 525870

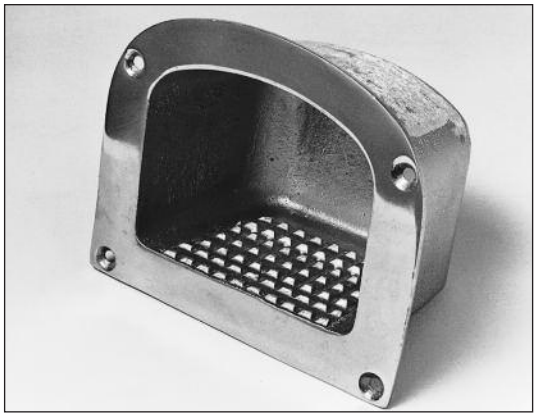

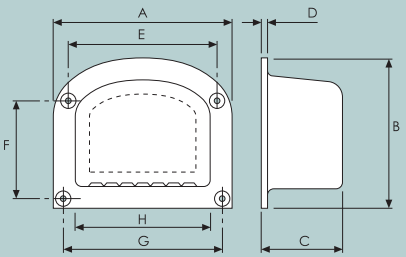

RECESSED STEP

Aluminium casting with polished face.

	A	B	C	D	E	F	G	H
4280/001					**Weight 660g/1.5lb**			
METRIC (mm)	*165*	*140*	*96*	*4*	*140*	*95*	*146*	*117*
IMPERIAL (ins)	*6.5*	*5.5*	*3.78*	*0.16*	*5.51*	*3.74*	*5.76*	*4.61*

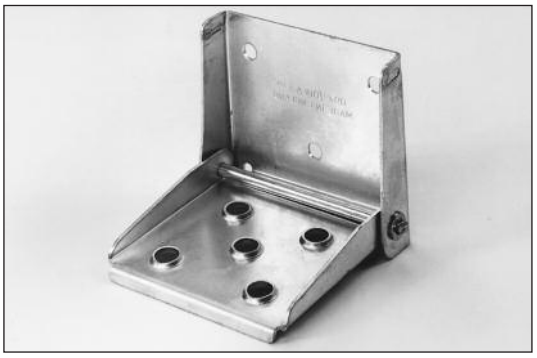

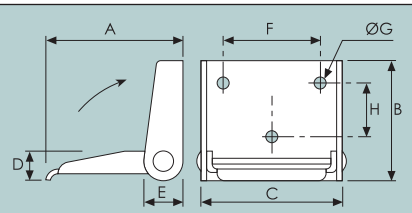

FOLDING STEP

Zinc plated, pressed steel.

	A	B	C	D	E	F	G	H
0974/001					**Weight 450g/1lb**			
METRIC (mm)	*105*	*94*	*110*	*25.4*	*25.4*	*76*	*8*	*44*
IMPERIAL (ins)	*4.13*	*3.70*	*4.33*	*1.00*	*1.00*	*3.00*	*0.32*	*1.73*

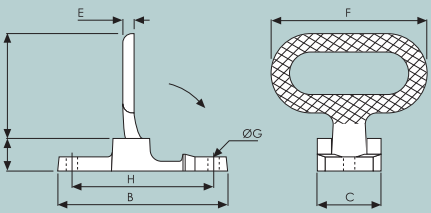

FOLDING STEP

Spring loaded step.

	A	B	C	D	E	F	G	H
0979/004	**304 Stainless steel**				**Weight 510g/1.1lb**			
METRIC (mm)	*75*	*119*	*44*	*22*	*8.5*	*110*	*8.2*	*98*
IMPERIAL (ins)	*2.95*	*4.69*	*1.73*	*0.87*	*0.33*	*4.33*	*0.32*	*3.86*
0979/005	**Black paint finish**				**Weight 520g/1.2lb**			
0979/006	**Zinc plate finish**				**Weight 520g/1.2lb**			
METRIC (mm)	*73*	*120*	*45*	*23*	*10*	*100*	*8.2*	*98*
IMPERIAL (ins)	*2.87*	*4.72*	*1.77*	*0.91*	*0.39*	*3.94*	*0.32*	*3.86*

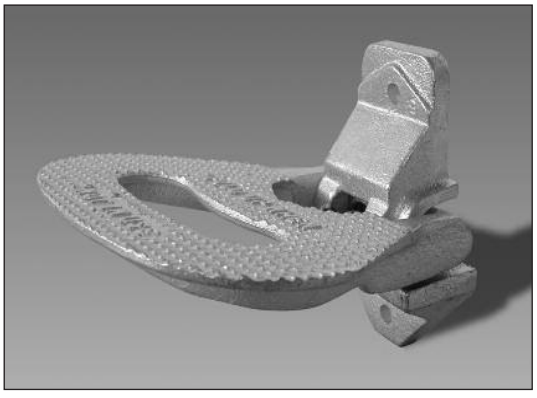

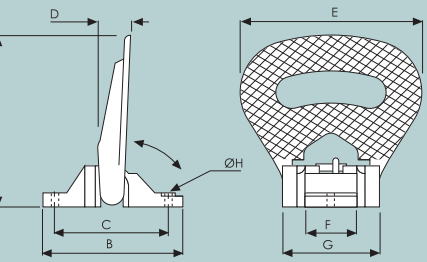

FOLDING STEP

Cast steel with a zinc plated finish.
Spring loaded step.

	A	B	C	D	E	F	G	H
0980/001					**Weight 1.5kg/3.3lb**			
METRIC (mm)	*174*	*130*	*98*	*28*	*165*	*48*	*89*	*8*
IMPERIAL (ins)	*6.85*	*5.12*	*3.86*	*1.10*	*6.50*	*1.89*	*3.50*	*0.32*

Steps

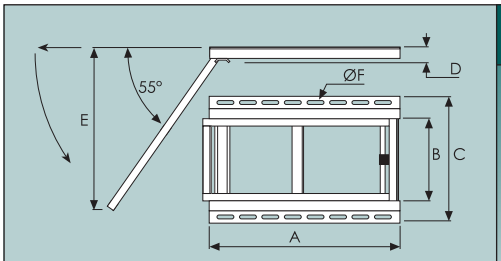

UNDERFLOOR STEP

Mild steel construction with an electro-zinc plated finish.
Pressed steel treadplate steps.

	A	B	C	D	E	F	G	H
5326/003					**Weight 8.3kg/18.3lb**			
METRIC (mm)	*660*	*280*	*420*	*75*	*560*	*10.5*		
IMPERIAL (ins)	*26.0*	*11.0*	*16.5*	*2.95*	*22.0*	*0.41*		

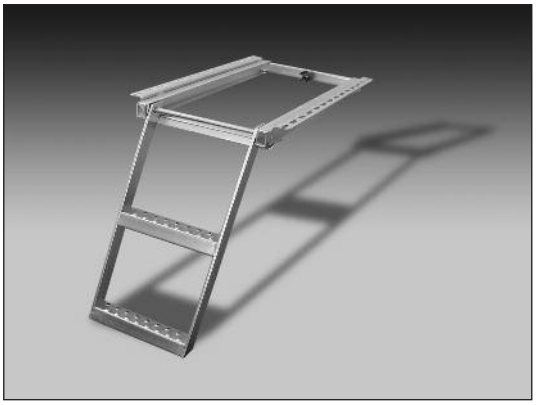

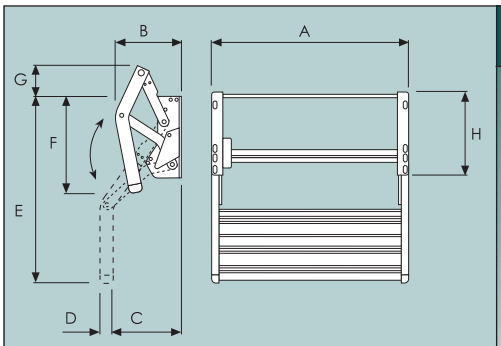

RETRACTABLE ACCESS STEP

Galvanised steel frame with an anodised aluminium step.
Spring assisted pull-out, push-in action.
Integral switch for dash mounted warning light (not included).
Supplied with full fitting instructions.

	A	B	C	D	E	F	G	H
5327/001					**Weight 7.58kg/16.7lb**			
METRIC (mm)	*550*	*180*	*178*	*41.0*	*537*	*272*	*88.0*	*232*
IMPERIAL (ins)	*21.7*	*7.09*	*7.01*	*1.61*	*21.1*	*10.7*	*3.50*	*9.14*

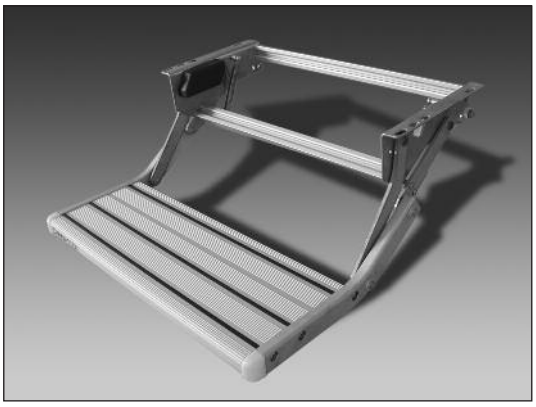

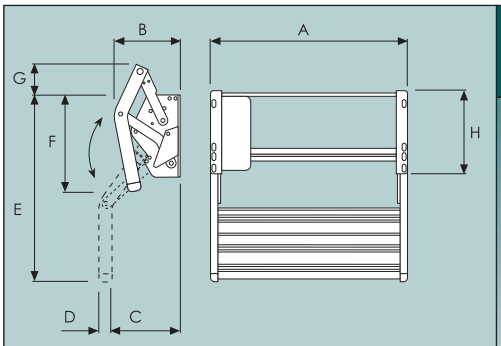

MOTORISED RETRACTABLE ACCESS STEP

Electro-zinc plated, mild steel construction.
Operation is via 12 volt motor, mounted in a shock resistant box.
Complete with an integral switch for dash mounted warning light (not included) and is supplied with full fitting instructions along with wiring diagrams.

	A	B	C	D	E	F	G	H
5327/201					**Weight 12.3kg/27.1lb**			
METRIC (mm)	*550*	*183*	*180*	*40.0*	*534*	*272*	*84.0*	*232*
IMPERIAL (ins)	*21.7*	*7.21*	*7.09*	*1.58*	*21.0*	*10.7*	*3.31*	*9.14*

0458/0061	**Coarse anti-slip tape**	**Weight 940g/2lb**
	Black. *50.8mm (2") wide, 18.3m (60') roll.* *Self-adhesive, single side.*	
0458/0067	**Coarse anti-slip tape**	**Weight 740g/1.6lb**
	Black & yellow. *50.8mm (2") wide, 18.3m (60') roll.* *Self-adhesive, single side.*	

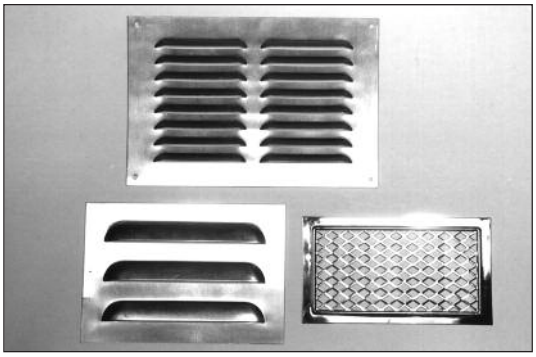

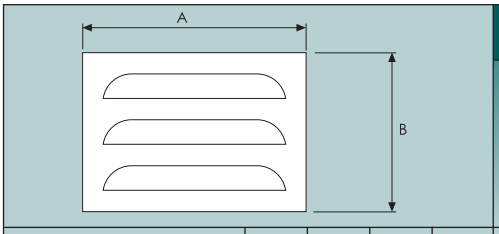

SLOTTED VENT

Pressed aluminium.

	A	B	C	D	E	F	G	H
2548/001							**Weight 60g/2.2oz**	
METRIC (mm)	*190*	*133*						
IMPERIAL (ins)	*7.5*	*5.25*						

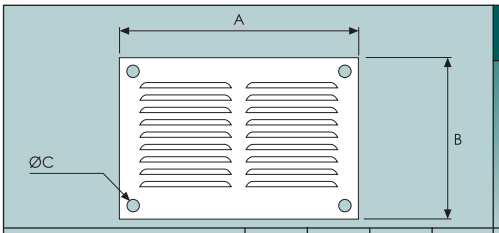

SLOTTED VENT

Pressed aluminium.

	A	B	C	D	E	F	G	H
2548/002							**Weight 70g/2.5oz**	
METRIC (mm)	*241*	*165*	*3.5*					
IMPERIAL (ins)	*9.5*	*6.5*	*0.14*					

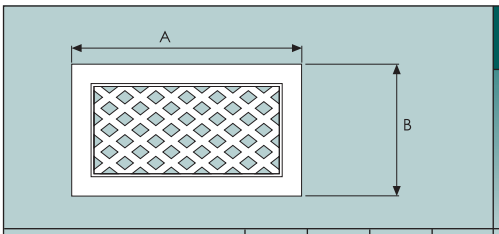

DIAMOND CUT GRILL

Chrome plated brass.

	A	B	C	D	E	F	G	H
4457/004							**Weight 80g/2.8oz**	
METRIC (mm)	*178*	*102*						
IMPERIAL (ins)	*7*	*4*						

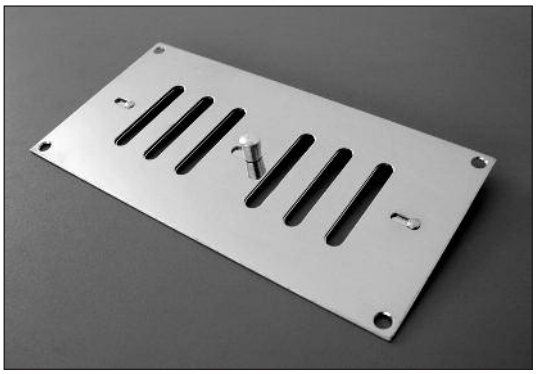

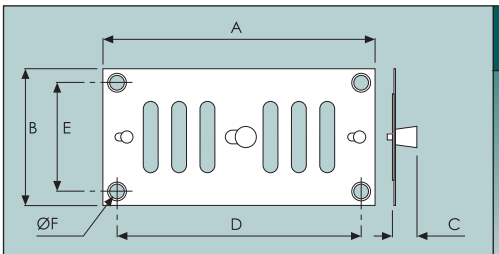

HIT & MISS VENTILATOR

Chrome plated brass.
High polish finish.
Sliding action.

	A	B	C	D	E	F	G	H
4455/003							**Weight 270g/9.5oz**	
METRIC (mm)	*200*	*100*	*14.0*	*188*	*88.0*	*5.80*		
IMPERIAL (ins)	*7.87*	*3.94*	*0.55*	*7.40*	*3.47*	*0.23*		

Ventilators

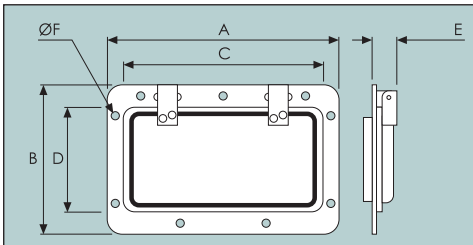

SOLID TOP VENTILATOR

Self-colour diecast frame with black polycoated, spring hinged top.
Maximum 25° opening.

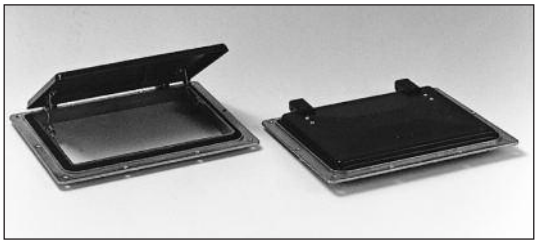

	A	B	C	D	E	F	G	H
0623/001					**Weight 870g/1.9lb**			
METRIC (mm)	*264*	*213*	*219*	*167*	*23*	*4.5*		
IMPERIAL (ins)	*10.4*	*8.4*	*8.62*	*6.58*	*0.91*	*0.18*		
0623/002					**Weight 1.21kg/2.7lb**			
METRIC (mm)	*337*	*261*	*280*	*203*	*23*	*4.5*		
IMPERIAL (ins)	*13.3*	*10.3*	*11.02*	*8*	*0.91*	*0.18*		
0623/003					**Weight 590g/1.3lb**			
METRIC (mm)	*238*	*147*	*193*	*102*	*23*	*5*		
IMPERIAL (ins)	*9.4*	*5.8*	*7.60*	*4*	*0.91*	*0.2*		

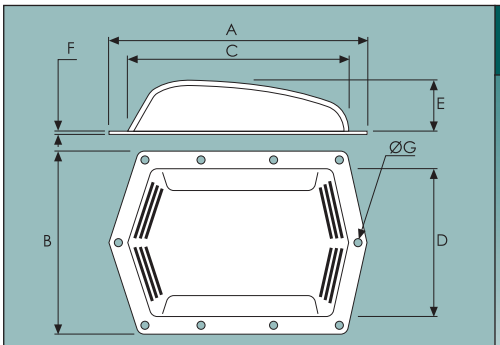

"FLOMATIC" VENTILATOR

Black primed finish.
Ø76mm (3") twin aperture.

	A	B	C	D	E	F	G	H
4468/001					**Weight 920g/2.03lb**			
METRIC (mm)	*275*	*205*	*239*	*169*	*56*	*2*	*4.5*	
IMPERIAL (ins)	*10.8*	*8.1*	*9.4*	*6.65*	*2.21*	*0.08*	*0.18*	
0930/001	**Vent grill, zinc plated**							
0930/002	**Vent mesh, aluminium**							

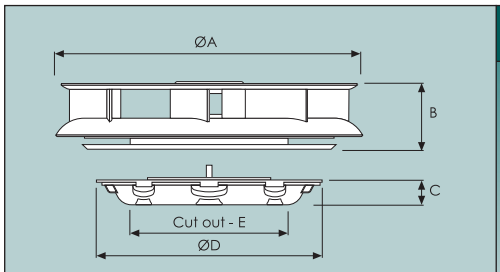

LOW PROFILE ROTARY VENT

ABS construction.
Suits roof thickness' 1-21mm.
Extracts upto 297m³/h.
For use under ladder racks.
Complete with internal grill & shutter.
NB: adhesive sealant required for fitting, please contact us for details.

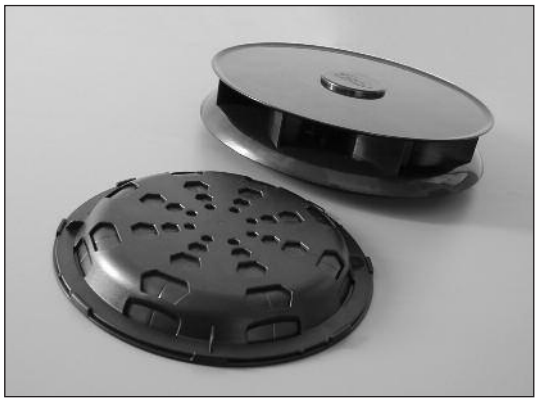

Left- Internal grill *Right- Ventilator*

	A	B	C	D	E	F	G	H
2527/006	**Black**				**Weight 1.2kg/2.6lb**			
2527/007	**White**				**Weight 1.2kg/2.6lb**			
METRIC (mm)	*319*	*68.0*	*26.0*	*236*	*130*			
IMPERIAL (ins)	*12.6*	*2.68*	*1.02*	*9.29*	*5.12*			

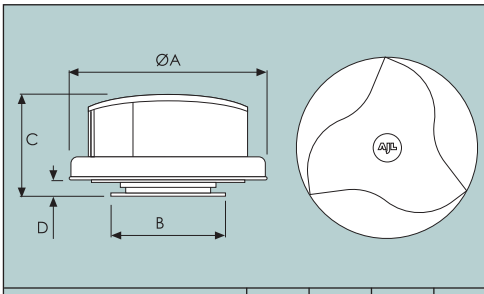

ROTARY VENT

ABS & 304 stainless steel components.
Supplied complete with internal shutter unit & gasket.
Fitting via Ø96mm cut out.

	A	B	C	D	E	F	G	H
2527/004	**Black**				**Weight 580g/1.3lb**			
2527/005	**White**				**Weight 580g/1.3lb**			
METRIC (mm)	*240*	*140*	*120*	*20*				
IMPERIAL (ins)	*9.45*	*5.51*	*4.72*	*0.79*				

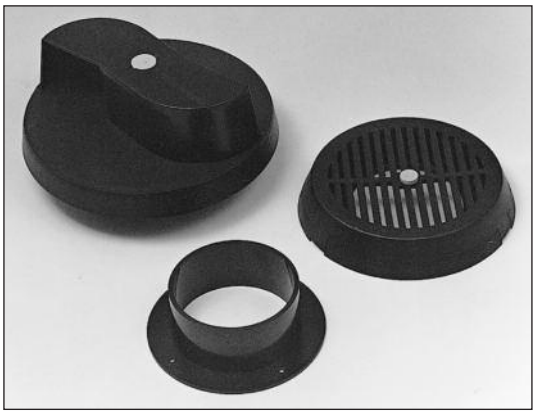

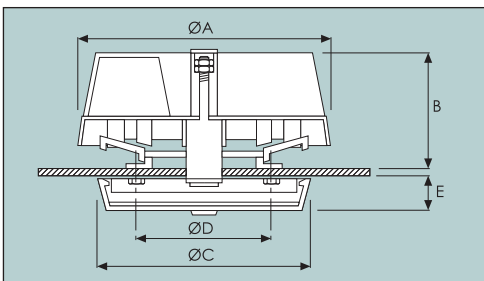

FLETTNER VENTILATOR

Plastic construction with 2 high quality ball races.

	A	B	C	D	E	F	G	H
2538/001	**Black**				**Weight 670g/1.4lb**			
2538/006	**White**				**Weight 670g/1.4lb**			
METRIC (mm)	*225*	*98.4*	*189*	*124*	*36.5*			
IMPERIAL (ins)	*8.88*	*3.88*	*7.44*	*4.88*	*1.44*			
2538/003	**Adaptor for double skin roof**							

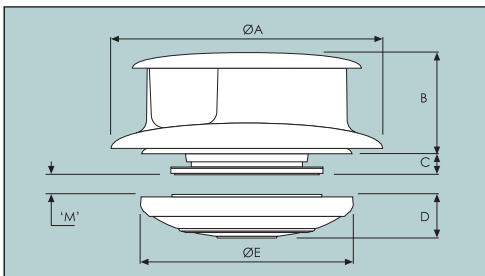

'TCX' FLETTNER VENTILATOR

Polypropylene with stainless steel bearings.
Complete with internal, adjustable grille.
'M' (gap) = 0.5 to 10mm.
Standard: circular @Ø145mm.
Narrow: oval @108mm suitable for ribbed roof.

	A	B	C	D	E	F	G	H
2538/007	**Standard aperture**				**Weight 950g/2.1lb**			
2538/008	**Narrow aperture**				**Weight 950g/2.1lb**			
METRIC (mm)	*260*	*97.5*	*18.75*	*40.0*	*198*			
IMPERIAL (ins)	*10.2*	*3.84*	*0.74*	*1.6*	*7.8*			
2538/0081	**Adaptor to suit 2538/008**							

Ventilators

SEMI-RECESSED ROOF-VENT

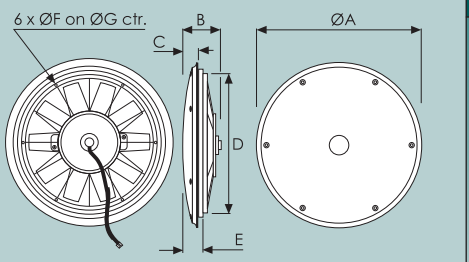

Black polypropylene fan & cover with a grey powder coated, aluminium shroud.
Suitable for double skinned roof.
Extracts up to 400m³ per hour.
Supplied complete with gasket.
See b49 for internal grills & switch.

	A	B	C	D	E	F	G	H
2541/301	**12 volt**				**Weight 1.43kg/3.2lb**			
2541/303	**24 volt**				**Weight 1.43kg/3.2lb**			
METRIC (mm)	*318*	*94.0*	*40.0*	*228*	*56.0*	*3.00*	*244*	
IMPERIAL (ins)	*12.52*	*3.70*	*1.58*	*8.98*	*2.21*	*0.12*	*9.61*	

PLANT-ON ROOF-VENT

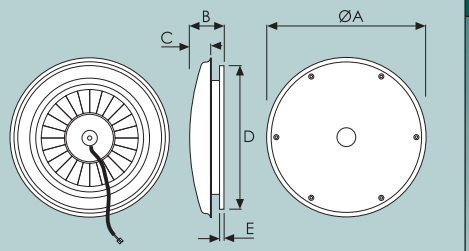

Black polypropylene fan, with a grey polypropylene outside cover and grey powder-coated outer-shroud.
Extracts up to 700 m³ per hour, with a reversible motor.
Complete with gasket.
See b49 for internal grills & switch.

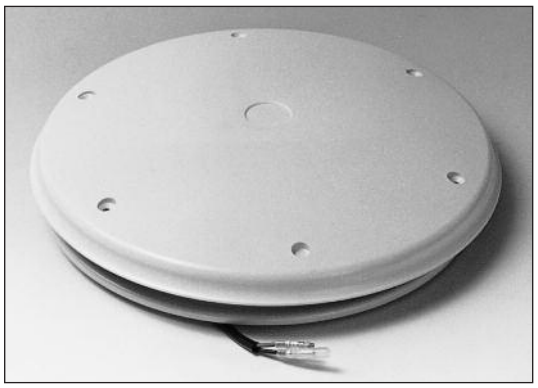

	A	B	C	D	E	F	G	H
2541/021	**12 volt**				**Weight 1.6kg/3.5lb**			
2541/023	**24 volt**				**Weight 1.6kg/3.5lb**			
METRIC (mm)	*320*	*71.0*	*44.0*	*292*	*7.00*			
IMPERIAL (ins)	*12.6*	*2.80*	*1.73*	*11.5*	*0.28*			

MOTORISED ROOF VENT

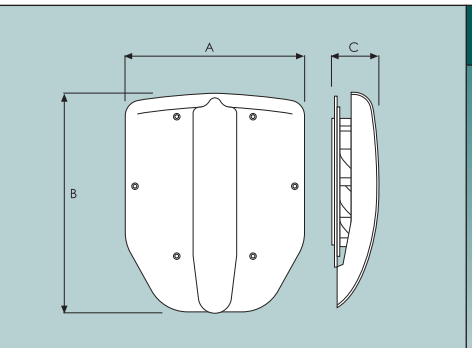

White ABS cover & roof ring.
Supplied complete with gasket.
Extraction rates: 850m³/h @ 2600 rpm.
Reversible motor.
See below for internal grills & switch.

	A	B	C	D	E	F	G	H
2541/412	**12 volt, 80W**				**Weight 1.7kg/3.7lb**			
2541/424	**24 volt, 80W**				**Weight 1.7kg/3.7lb**			
METRIC (mm)	*315*	*385*	*62.0*					
IMPERIAL (ins)	*12.4*	*15.2*	*2.44*					

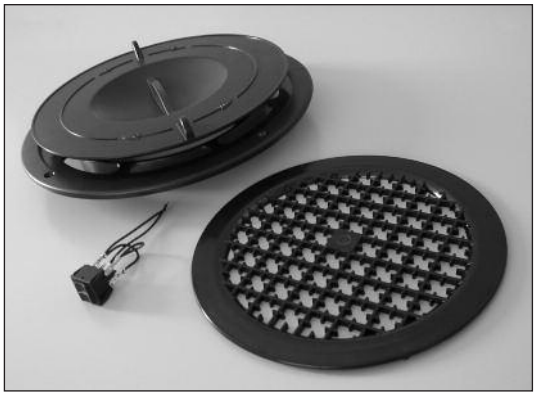

Top left: 2541/1010 *Bottom right: 2541/203*
Centre: 2541/201

2541/201	**3 way switch**
	Dash-mounted, on/off and direction flow switch.
2541/203	**Internal ventilator grill**
	Black plastic. Ø225mm max. with Ø205mm cutout to mount.
2541/1010	**Internal air flow unit**
	Black ABS. Ø300mm max. with Ø230mm cutout to mount.

2541/352700	**Grill Cover**
	White ABS - Ø270mm x 4mm

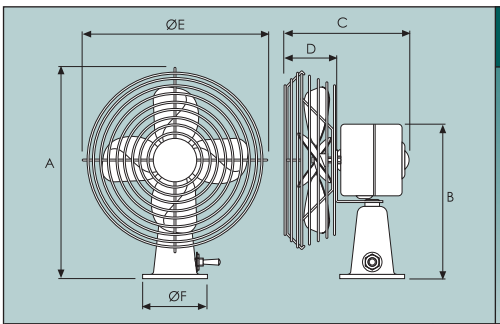

'PERSONAL' CO-AXIAL FAN

Manufactured from powder coated steel through-out. Suitable for screw/bolt fixing (screws supplied).
Two speed motor turns 152.4mm (6") blades @ 1500 or 3000rpm moving $7m^3$ or $15m^3$ per hour.

	A	B	C	D	E	F	G	H
2539/512					**Weight 1.1kg/2.4lb**			
METRIC (mm)	*225*	*160*	*125*	*60*	*190*	*70*		
IMPERIAL (ins)	*8.86*	*6.30*	*4.92*	*2.36*	*7.48*	*2.76*		

Ventilators

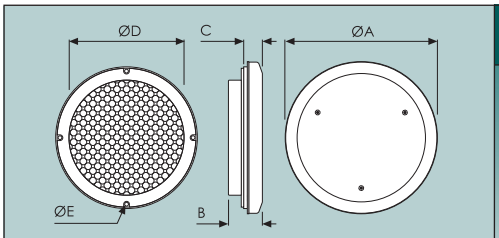

SEMI-RECESSED ROOF-VENT

'Mira' approved.
Supplied with 40mm inner trim ring (see below), cutout template & dome.
Dome secured with stainless steel 'Torx' screws'

	A	B	C	D	E	F	G	H
2539/012	**12v - White dome**				**Weight 2.2kg/4.9lb**			
2539/024	**24v - White dome**				**Weight 2.2kg/4.9lb**			
2540/1240	**12v - Yellow dome**				**Weight 2.2kg/4.9lb**			
2540/2440	**24v - Yellow dome**				**Weight 2.2kg/4.9lb**			
METRIC (mm)	*320*	*95.0*	*65.0*	*240*	*8.00*			
IMPERIAL (ins)	*12.6*	*3.74*	*2.55*	*9.50*	*0.32*			

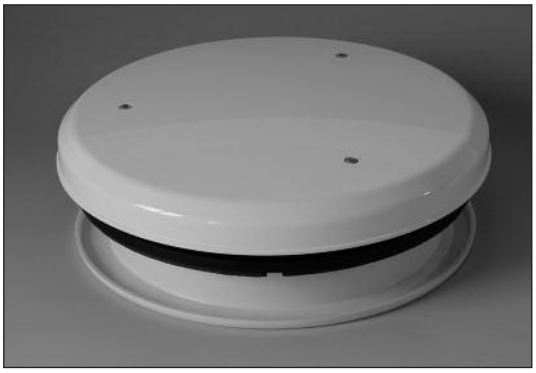

PACET ROOF VENTS
Low Profile, Positive Ventilation

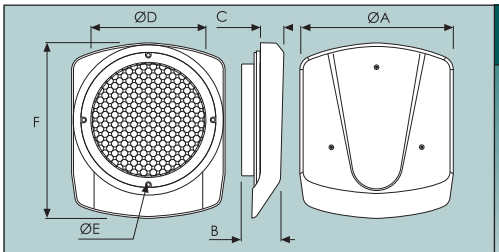

SEMI-RECESSED ROOF-VENT

'Mira' approved.
Supplied with 40mm inner trim ring (see below), cutout template & dome.
Dome secured with stainless steel 'Torx' screws'

	A	B	C	D	E	F	G	H
2550/1240	**12v - White dome**				**Weight 2.2kg/4.9lb**			
2550/2440	**24v - White dome**				**Weight 2.2kg/4.9lb**			
2560/1240	**12v - Yellow dome**				**Weight 2.2kg/4.9lb**			
2560/2440	**24v - Yellow dome**				**Weight 2.2kg/4.9lb**			
METRIC (mm)	*320*	*95.0*	*65.0*	*240*	*8.00*	*362*		
IMPERIAL (ins)	*12.6*	*3.74*	*2.55*	*9.50*	*0.32*	*14.3*		

PACET ROOF VENTS
Low Profile, Positive Ventilation

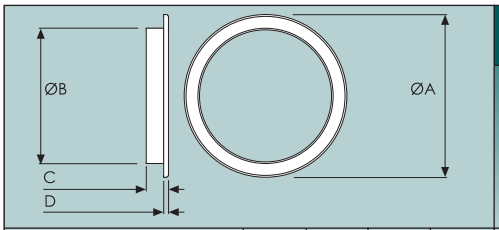

INTERIOR TRIM RING

White ABS.
Supplied with 2539, 2540, 2550 & 2560 vents.

	A	B	C	D	E	F	G	H
METRIC (mm)	*302*	*250*	*42.0*	*9.00*				
IMPERIAL (ins)	*11.89*	*9.84*	*1.65*	*0.35*				

MIRA approved and fitted by OEMs on vehicles used by police, ambulance services, community transport, bus manufacturers, and due to highly efficient extraction rates - particularly suitable for any vehicles carrying livestock. Other applications include off-road vehicles, agricultural vehicles and motorhomes as well as marine and inland water craft.

With key features such as a built-in safety mesh (protecting fingers & hair!), a unique chassis construction with a moulded flexible seal to eliminate cold drafts when not in use (without sacrificing air extraction performance) and a long life motor with twin ball bearings all Pacet motorised vents are supplied pre-assembled to aid easy 1 man installation.

All vents are supplied with a 40mm, white ABS, interior trim ring which will suit most applications with roof thicknesses between 33mm and 52mm. A 10mm trim ring is available to suit single skin roof applications and for vehicles with a more substantial roof or a false ceiling a 60mm ring is available on request.

Full fitting instructions and a cutout template are supplied with each vent along with self adhesive foam inserts for use on vehicles with a ridged roof.

Specifications:

Dome	UV stable Polycarbonate White or Yellow (RAL 1016)
Shroud	Nylon & glass fibre
Blade	Nylon & glass fibre
Trim Ring	White ABS (black available on request)
Motor/Fixings	316 Stainless steel
Aperture required:	242mm
Above roof line:	65mm approx depending on seal compression.
Motor:	12V or 24V; 80 Watt
Amp draw:	4.5 @ 12V & 3.0 @ 24V
Extraction:	1697m3/h max

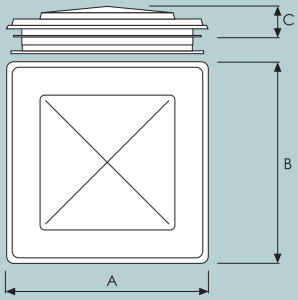

ROOF LIGHT & VENTILATOR

Double skinned dome with a beige plastic base.
Suits roof thickness' from 20 to 45mm.

	A	B	C	D	E	F	G	H
H593A492	**Complete assembly**				**Weight 2.7kg/6lb**			
METRIC (mm)	*575*	*425*	*95*					
IMPERIAL (ins)	*22.6*	*16.7*	*3.74*					
350 mm (13.8") x 500 mm (19.7") cut out.								
H593A493	**Complete assembly**				**Weight 3.9kg/8.6lb**			
H593B006	**Mechanism only**							
H593B021	**Acrylic dome**							
H593B022	**Polycarbonate dome**							
METRIC (mm)	*575*	*575*	*95*					
IMPERIAL (ins)	*22.6*	*22.6*	*3.74*					
500 mm (19.7") x 500 mm (19.7") cut out.								

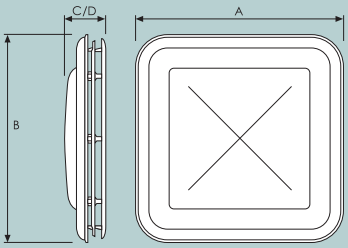

ROOF LIGHT & VENTILATOR

Grey plastic mechanism complete with inner trim ring.
Impact resistant polycarbonate domes.
Suits roof thickness' from 32 to 65mm.

	A	B	C	D	E	F	G	H
H593C156	**Mechanism only**				**Weight 1.6kg/3.5lb**			
H593C153	**Opal dome**				**Weight 1.1kg/2.4lb**			
H593C151	**Tinted Grey dome**				**Weight 1.1kg/2.4lb**			
METRIC (mm)	*579*	*579*	*82.0*	*147*				
IMPERIAL (ins)	*22.8*	*22.8*	*3.23*	*5.79*				
500 mm (19.7") x 500 mm. (19.7") cut out.								
H593C158	**Mechanism only**				**Weight 1.4kg/3.1lb**			
H593P500	**Opal dome**				**Weight 860g/1.9lb**			
H593C152	**Tinted Grey dome**				**Weight 860g/1.9lb**			
METRIC (mm)	*579*	*424*	*97.0*	*162*				
IMPERIAL (ins)	*22.8*	*16.7*	*3.82*	*6.38*				
350 mm (13.8") x 500 mm (19.7") cut out.								

Ventilators

ROOF LIGHT & VENTILATOR

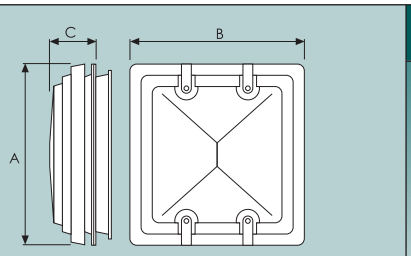

Cream plastic base with opalescent plastic top projection;
open = 127mm (5").
Closed (shown) = Dim C.
Cut out = 360mm (14.2") x 320mm(12.6").

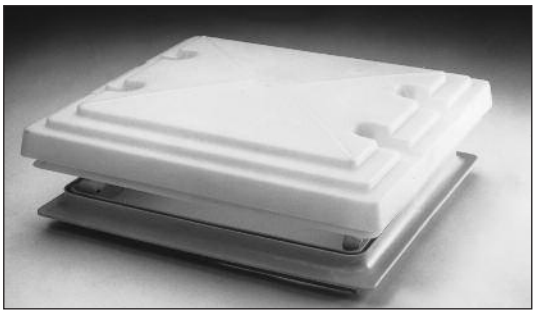

		A	B	C	D	E	F	G	H
0638/004						**Weight 1.31kg/2.9lb**			
METRIC	*(mm)*	*420*	*380*	*76.0*					
IMPERIAL	*(ins)*	*16.5*	*15.0*	*3.00*					
0638/005		**Fly screen**							

ROOF HATCH

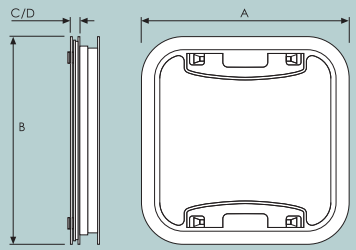

Grey powder coated aluminium mechanism & inner trim ring.
Flat tinted glass top.
Suits roof thickness' from 45 to 65mm.

		A	B	C	D	E	F	G	H
H5930085		**Roof hatch**				**Weight 9.5kg/21lb**			
METRIC	*(mm)*	*591*	*591*	*24.0*	*69.0*				
IMPERIAL	*(ins)*	*23.3*	*23.3*	*0.95*	*2.72*				
		500 mm (19.7") x 500 mm (19.7") cut out.							
H5930100		**Roof hatch**				**Weight 14.8kg/31lb**			
METRIC	*(mm)*	*1027*	*591*	*24.0*	*69.0*				
IMPERIAL	*(ins)*	*40.4*	*23.3*	*0.95*	*2.72*				
		970 mm (38.2") x 540 mm (21.3") cut out.							
		Supplied with emergency break-glass hammer							

ROOF HATCH

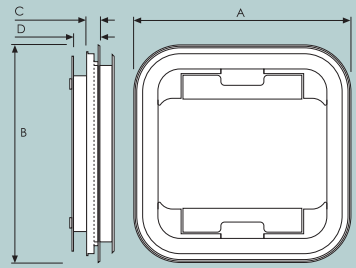

Grey ABS mechanism & inner trim ring.
Flat tinted glass top.
Suits roof thickness' from 30mm to 70mm.
Inner frame dismantles for easy installation.
Full fitting instructions supplied

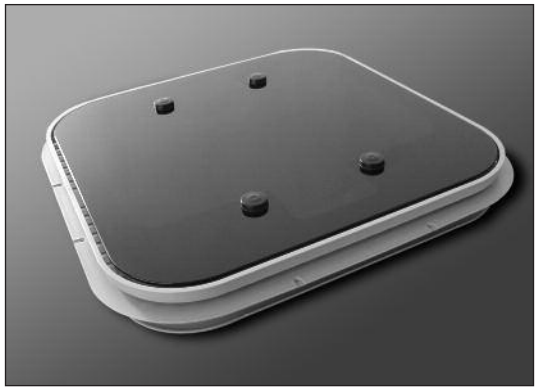

		A	B	C	D	E	F	G	H
9705/5000		**Manual roof hatch**				**Weight 10kg/22lb**			
9705/905000E		**24v Electric roof hatch**				**Weight 10kg/22lb**			
METRIC	*(mm)*	*640*	*640*	*40.0*	*84.0*				
IMPERIAL	*(ins)*	*25.2*	*25.2*	*1.58*	*3.31*				
		530 mm (20.9") x 530 mm (20.9") cut out.							
9705/6000		**Manual roof hatch**				**Weight 15kg/33lb**			
9705/906000E		**24v Electric roof hatch**				**Weight 15kg/33lb**			
METRIC	*(mm)*	*640*	*1080*	*40.0*	*84.0*				
IMPERIAL	*(ins)*	*25.2*	*42.6*	*1.58*	*3.31*				
		530 mm (20.9") x 970 mm (38.2") cut out.							
		Supplied with emergency break-glass hammer							
9705/306000		**Control panel, for electric roof hatches**							

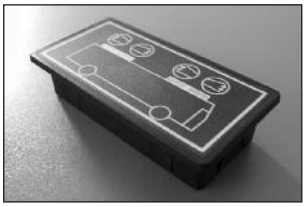

Inset shows control panel 9705/306000, for use with electric roof hatches.

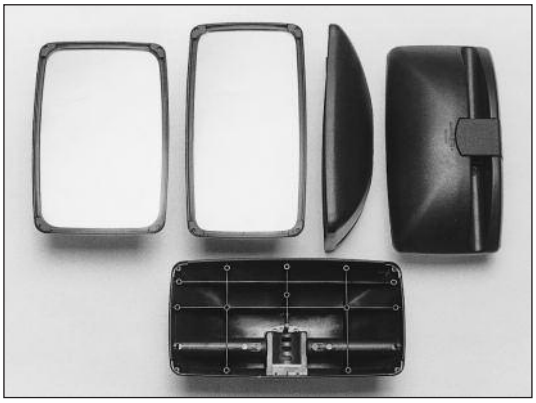

AERODYNAMIC ABS MOULDED, CONVEX MIRROR HEADS	
	Manufactured from impact resistant ABS.
	Complete with integral clamp to fit Ø16-22mm arms.
	Dimensions refer to visible glass size only.
3389/003	**ABS moulded, convex mirror head.**
3389/043	**Convex mirror glass.**
	235mm (9.25") x 152mm (6"),
	'E' approved, class III.
3390/003	**ABS moulded, convex mirror head.**
3390/043	**Convex mirror glass.**
	331mm (13") x 214mm (8.4"),
	'E' approved, class II.

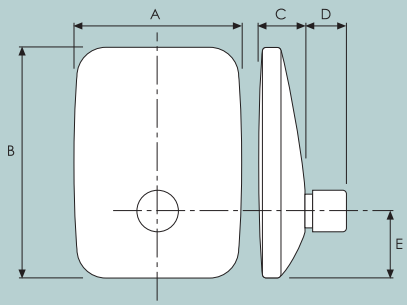

'UNBREAKABLE' MIRRORS

10 year guarentee.
85% reflection.
Distortion free image.
Exceeds EC directive on impact tests; withstands ball bearing shot at 120 metre per second without shattering. Withstands temperature range of -30°C to +80°C. Complete with universal fitting for 'D' or straight arms up to Ø24mm.

		A	B	C	D	E	F	G	H
3396/0100	**Class II**					**Weight 1.04kg/2.3lb**			
METRIC	*(mm)*	*305*	*205*	*70*	*56*	*68*			
IMPERIAL	*(ins)*	*12.0*	*8.0*	*2.76*	*2.21*	*2.68*			
3396/0200	**Class III**					**Weight 330g/11.6oz**			
METRIC	*(mm)*	*150*	*210*	*44*	*47*	*56*			
IMPERIAL	*(ins)*	*5.91*	*8.27*	*1.73*	*1.85*	*2.21*			

• 'EUROWAY' MIRROR HEADS • 'EUROWAY' MIRROR HEADS •	
	Nominal size = 320mm (13") x 200mm (8").
	Black, pressed steel back-plate with convex glass.
	Multi-position adjustment with clamp
	to suit arms from Ø13mm to Ø23mm.
	'E' approved, class III.
3333/003	**'Euroway' mirror head with clamp**
3333/043	**Convex mirror glass**

* *Non 'E' marked mirrors can only be used on trailers manufactured before October 1995 and on trucks registered before April 1996.*

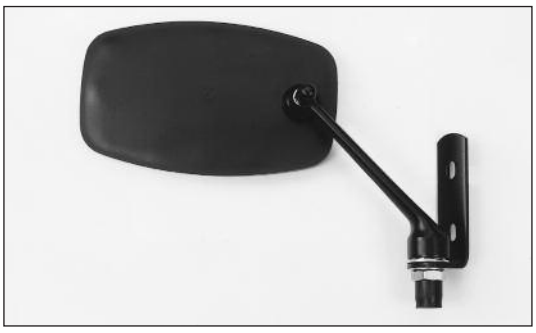

• MIRROR ASSEMBLY• MIRROR ASSEMBLY •MIRROR ASSEMBLY •	
	Nominal size = 178mm (7") x 102mm (4").
	Black plastic surround with convex glass and a
	black, poly-coated arm;
	125mm (5")long with 89mm (3.5") max. throw-out
	*Not 'E' approved.**
2767/001	**Mirror head with arm and bracket.**

Marker Boards

REAR MARKER PLATES	
	Red fluorescent & yellow reflective stripes. Conforms to BSAU 152
4811/001	**Type 1-single**
	1400mm (55.125") x 140mm (5.5")
4812/001	**Type 2 & 3-pairs**
	699mm (27.5") x 140mm (5.5")
4813/001	**Type 4-single**
	1264mm (49.76") x 251mm (9.875") Printed "long vehicle"
4814/001	**Type 5-pairs**
	533mm (21") x 254mm (10") Printed "long vehicle"
4815/001	**Type 7-pairs**
	419mm (16.5") x 235mm (9.25")
4815/002	**Type 6-pairs**
	375mm (14.75") x 267mm (10.5")

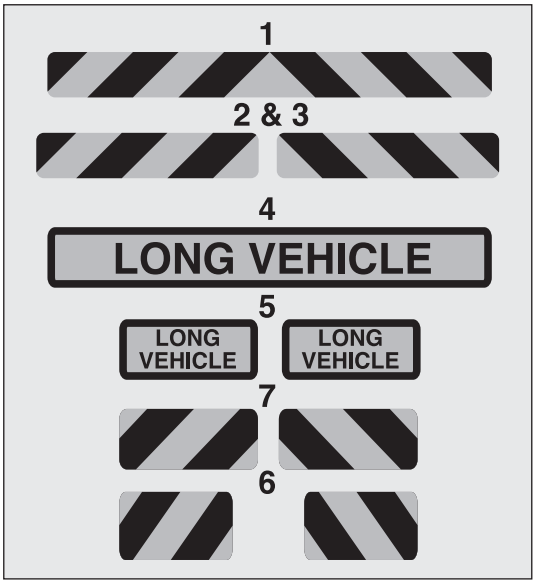

IMPORTANT NOTE: *The above marker boards can only be used on trailers manufactured before October 1995 and on trucks registered before April 1996.*

ECE 70/1 EUROPEAN MARKER BOARDS	
	ECE70/1 reflective is a micro prismatic material, which has higher reflection benefit than the older ECE70 reflective. It also has a longer "life span" and is clearly visible at night and in poor conditions.
4820/261A1	**Type A, Chevron. Single.**
	1130 mm x 130 mm (marked - E4 017012)
4820/262A1	**Type B, Chevron. Pair.**
	565 mm x 130 mm (marked - E4 017012)
4820/263A1	**Type C, Chevron. Set of four.**
	282 mm x 100 mm (marked - E4 017012)
4820/264A1	**Type D, Plain. Single.**
	1130 mm x 195 mm (marked - E4 017012)
4820/265A1	**Type E, Plain. Pair.**
	565 mm x 195 mm (marked - E4 017012)
4820/266A1	**Type F, Plain. Set of four.**
	282 mm x 195 mm (marked - E4 017012)

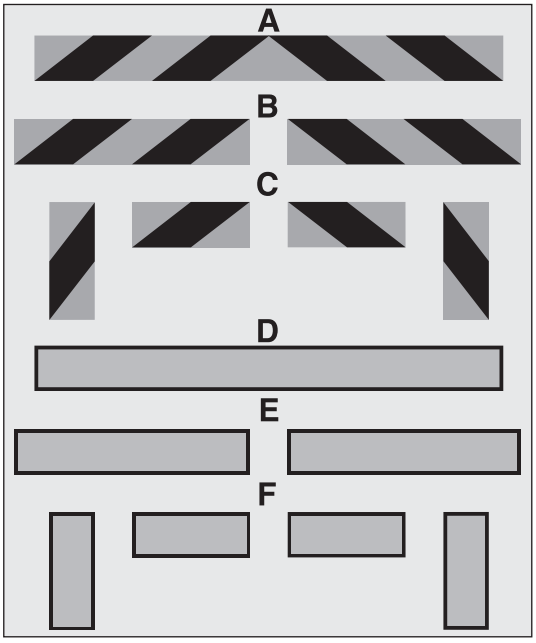

NOTE: *For Conspicuity Tape, refer page F14.*

4820/001	SCHOOL BUS SIGNS
	To comply with the Road Vehicle Regulations 1994. Black profile with a yellow reflective background on a PVC back-board.
	Kit includes: 1 Front board - 295 mm (11.6") square.
	1 Rear board - 455 mm (18") square.
	8 Suction pads.

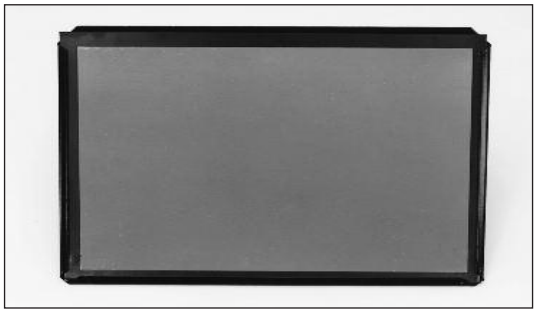

HAZCHEM MARKER PLATE		
	Steel back plate with reversible board (400mm x 300mm). Orange reflective face & black reverse.	
4816/001	**Complete assembly**	**Weight 1.02kg/2.25lb**
4816/002	**Plate holder**	**Weight 660g/1.5lb**
4816/003	**Marker plate**	**Weight 360g/12.7oz**

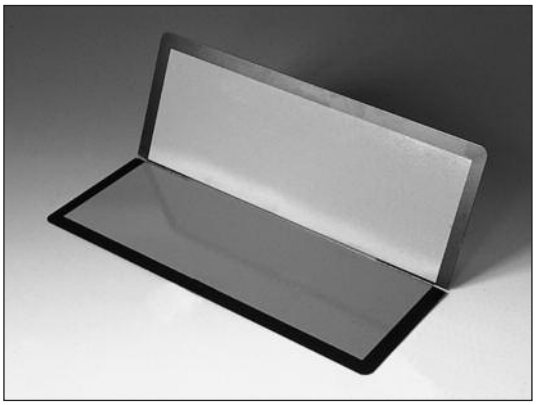

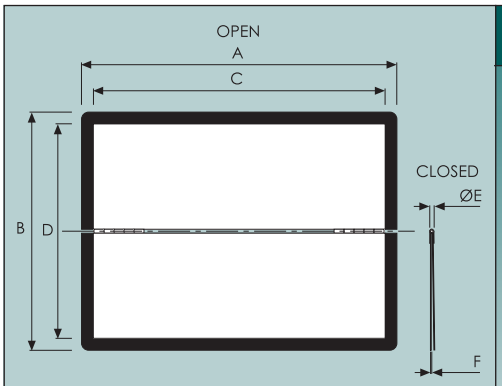

FOLDING HAZCHEM MARKER PLATE

Black powder-coated steel plate with orange reflective surface.

	A	B	C	D	E	F	G	H
4816/004					**Weight 940g/2.1lb**			
METRIC (mm)	*400*	*300*	*376*	*286*	*6.00*	*1.50*		
IMPERIAL (ins)	*15.75*	*11.81*	*14.8*	*11.3*	*0.24*	*0.06*		

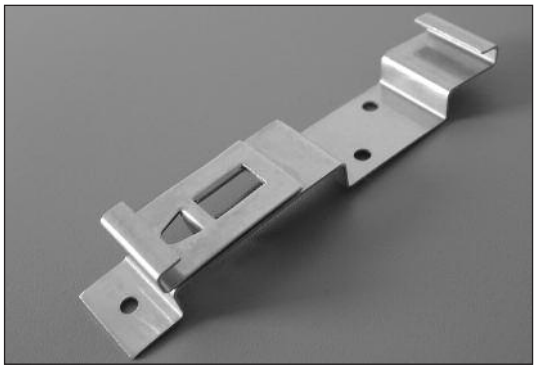

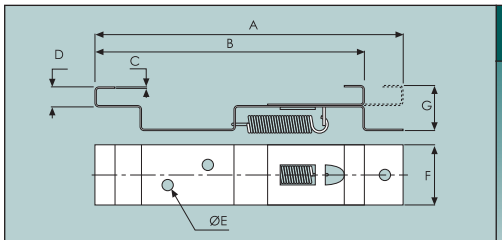

NUMBER PLATE HOLDER

Stainless steel.
Spring loaded.
Sold in singles, used in pairs.

	A	B	C	D	E	F	G	H
5339/001					**Weight 40g/1.4oz**			
METRIC (mm)	*122*	*108*	*1.00*	*7.00*	*4.40*	*24.0*	*18.0*	
IMPERIAL (ins)	*4.80*	*4.25*	*0.04*	*0.28*	*0.17*	*0.95*	*0.71*	

albert Jagger limited

Licence Holders

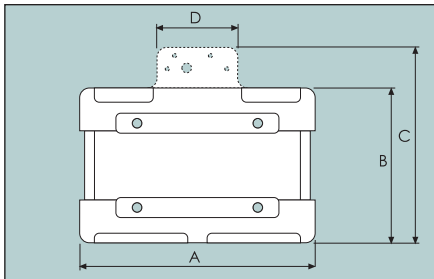

NUMBER PLATE HOLDER

Manufactured from modified polypropylene. Number plate slides in from either side of holder.

	A	B	C	D	E	F	G	H
5341/010	**No lamp bracket**				**Weight 280g/9.9oz**			
5341/020	**With lamp bracket**				**Weight 300g/10.6oz**			
METRIC (mm)	*332*	*221*	*281*	*115*				
IMPERIAL (ins)	*13.1*	*8.70*	*11.1*	*4.53*				

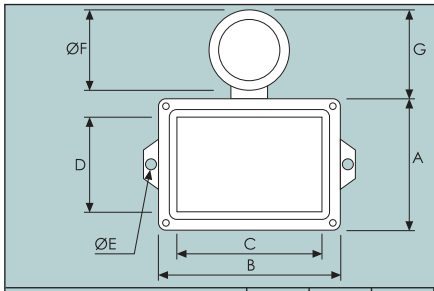

VTG PLATE HOLDER

Black japanned steel with clear plastic window & rubber sealing gasket.

	A	B	C	D	E	F	G	H
3047/001	**VTG. 6 plate & disc**				**Weight 470g/1.04lb**			
METRIC (mm)	*146*	*190*	*152*	*104*	*6*	*78*	*85*	
IMPERIAL (ins)	*5.75*	*7.48*	*5.98*	*4.1*	*0.24*	*3.07*	*3.35*	
3047/002	**VTG. 6 plate only**				**Weight 370g/13.1oz**			
METRIC (mm)	*146*	*190*	*152*	*104*	*6*			
IMPERIAL (ins)	*5.75*	*7.48*	*5.98*	*4.1*	*0.24*			
3049/001	**VTG. 6A plate & disc**				**Weight 590g/1.3lb**			
METRIC (mm)	*202*	*184*	*147*	*165*	*6*	*78*	*92*	
IMPERIAL (ins)	*7.95*	*7.24*	*5.79*	*6.5*	*0.24*	*3.07*	*3.62*	
3049/002	**VTG. 6A plate only**				**Weight 480g/1.1lb**			
METRIC (mm)	*202*	*184*	*147*	*165*	*6*			
IMPERIAL (ins)	*7.95*	*7.24*	*5.79*	*6.5*	*0.24*			

Left- 3047/001 *Right- 3049/001*

LICENCE HOLDERS		
	Centaur brand	
3051/001	**Screw-on, single**	**Weight 110g/3.9oz**
	Chrome plated rim, for Ø75mm (3") disc zinc plated, pressed steel bracket.	
3055/001	**Screw-on, double**	**Weight 220g/7.8oz**
	Chrome plated rim, for Ø75mm (3") disc zinc plated, pressed steel bracket.	
8051/001	**Clip-on, single**	**Weight 10g/0.35oz**
	One piece plastic moulding for Ø75mm (3") disc.	

www.albert-jagger.co.uk Walsall: 01922 471000 Heywood: 01706 692110 Romsey: 01794 525870

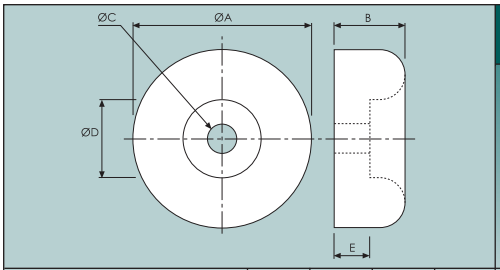

ROUND BUFFERS

Black synthetic rubber.

	A	B	C	D	E	F	G	H
2026/002					**Weight 100g/3.5oz**			
METRIC (mm)	*64*	*25.4*	*10.6*	*28*	*12.7*			
IMPERIAL (ins)	*2.52*	*1.00*	*0.42*	*1.10*	*0.50*			
2028/001					**Weight 3g/0.1oz**			
METRIC (mm)	*25.4*	*12.7*	*4*	*12.7*	*6*			
IMPERIAL (ins)	*1.00*	*0.50*	*0.16*	*0.50*	*0.24*			

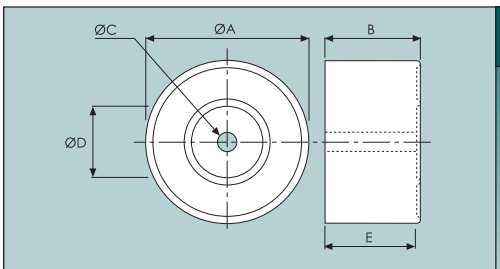

ROUND BUFFERS

Black synthetic rubber.

	A	B	C	D	E	F	G	H
2025/001					**Weight 40g/1.4oz**			
METRIC (mm)	*38.0*	*26.0*	*6.20*	*15.0*	*24.0*			
IMPERIAL (ins)	*1.50*	*1.02*	*0.24*	*0.59*	*0.95*			
2026/001					**Weight 20g/0.7oz**			
METRIC (mm)	*31.8*	*22.0*	*6.2*	*12.0*	*17.0*			
IMPERIAL (ins)	*1.25*	*0.87*	*0.24*	*0.47*	*0.67*			
2026/004					**Weight 50g/1.8oz**			
METRIC (mm)	*36.0*	*40.0*	*5.20*	*16.0*	*36.0*			
IMPERIAL (ins)	*1.42*	*1.58*	*0.20*	*0.63*	*1.42*			

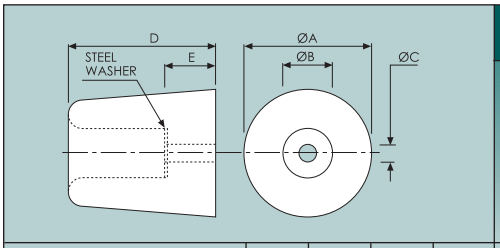

CONICAL BUFFER

Moulded black rubber complete with steel washer insert.

	A	B	C	D	E	F	G	H
2028/003					**Weight 260g/9.2oz**			
METRIC (mm)	*65.0*	*25.0*	*9.5*	*75.0*	*26.0*			
IMPERIAL (ins)	*2.56*	*0.98*	*0.37*	*2.95*	*1.02*			
2028/005					**Weight 290g/10.2oz**			
METRIC (mm)	*65.0*	*25.0*	*9.5*	*100*	*26.0*			
IMPERIAL (ins)	*2.56*	*0.98*	*0.37*	*3.94*	*1.02*			

Rubber Buffers

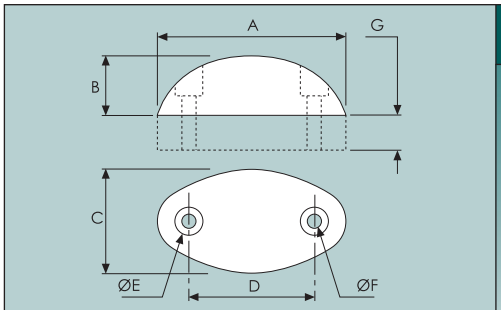

OVAL BUFFERS

Black synthetic rubber.

	A	B	C	D	E	F	G	H
2023/002 "Mouse"					**Weight 30g/1.1oz**			
METRIC (mm)	*68*	*21*	*35*	*45*	*9*	*5*		
IMPERIAL (ins)	*2.68*	*0.83*	*1.38*	*1.77*	*0.35*	*0.2*		
2023/101 "Double mouse"					**Weight 80g/2.8oz**			
METRIC (mm)	*68*	*21*	*35*	*45*	*9*	*5*	*17*	
IMPERIAL (ins)	*2.68*	*0.83*	*1.38*	*1.77*	*0.35*	*0.2*	*0.67*	

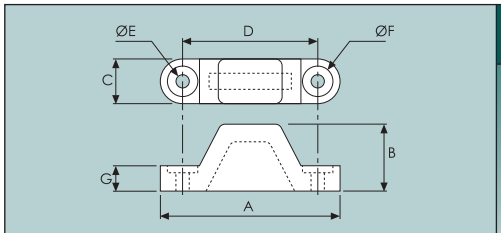

'TOP-HAT' BUFFERS

Black synthetic rubber.

	A	B	C	D	E	F	G	H
2022/001					**Weight 70g/2.5oz**			
METRIC (mm)	*102*	*38*	*24*	*79*	*7.5*	*19*	*15*	
IMPERIAL (ins)	*4.02*	*1.50*	*0.95*	*3.11*	*0.30*	*0.75*	*0.59*	

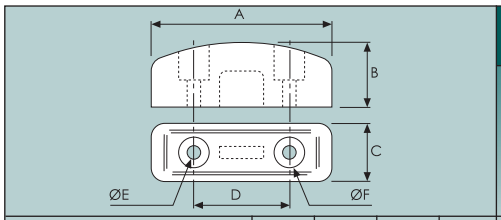

TAILBOARD BUFFERS

Black synthetic rubber.

	A	B	C	D	E	F	G	H
2500/002					**Weight 180g/6.4oz**			
METRIC (mm)	*125*	*47*	*40*	*65*	*8*	*18.5*		
IMPERIAL (ins)	*4.92*	*1.85*	*1.58*	*2.56*	*0.32*	*0.73*		

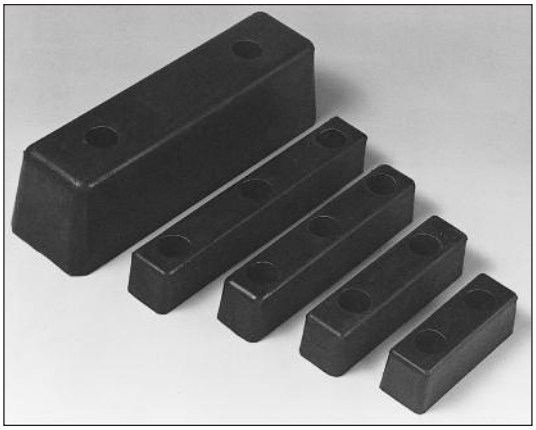

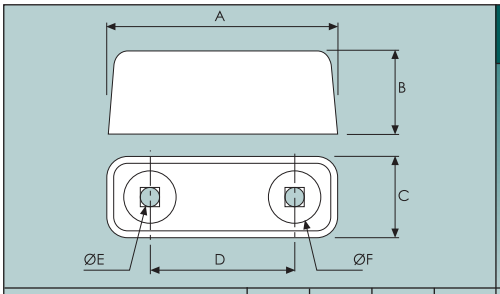

SQUARE SECTION BUFFERS

Black synthetic rubber.

	A	B	C	D	E	F	G	H
2503/001	**2 Bolt holes**				**Weight 510g/1.1lb**			
METRIC (mm)	*200*	*50.8*	*50.8*	*103*	*10.0*	*30.0*		
IMPERIAL (ins)	*7.87*	*2.00*	*2.00*	*4.06*	*0.39*	*1.18*		
2503/002	**2 Bolt holes**				**Weight 310g/11oz**			
METRIC (mm)	*150*	*50.8*	*50.8*	*76.0*	*12.0*	*30.0*		
IMPERIAL (ins)	*5.91*	*2.00*	*2.00*	*3.00*	*0.47*	*1.18*		
2503/003	**3 Bolt holes**				**Weight 690g/1.5lb**			
METRIC (mm)	*250*	*50.8*	*50.8*	*87.0*	*8.00*	*30.0*		
IMPERIAL (ins)	*9.84*	*2.00*	*2.00*	*3.43*	*0.32*	*1.18*		
2503/004	**3 Bolt holes**				**Weight 770g/1.7lb**			
METRIC (mm)	*300*	*50.8*	*50.8*	*110*	*10.0*	*30.0*		
IMPERIAL (ins)	*11.8*	*2.00*	*2.00*	*4.33*	*0.39*	*1.18*		
2503/005	**3 Bolt holes**				**Weight 1.2kg/2.7lb**			
METRIC (mm)	*405*	*50.8*	*50.8*	*168*	*12.0*	*30.0*		
IMPERIAL (ins)	*16.0*	*2.00*	*2.00*	*6.61*	*0.47*	*1.18*		
2503/006	**2 Bolt holes**				**Weight 2.96kg/6.5lb**			
METRIC (mm)	*350*	*100*	*100*	*200*	*12.0*	*30.0*		
IMPERIAL (ins)	*13.7*	*3.94*	*3.94*	*7.87*	*0.47*	*1.18*		

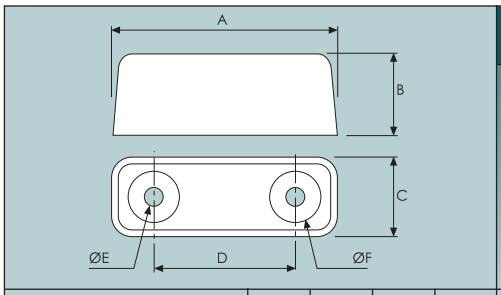

'IMPACT' BUFFERS

Black synthetic rubber.
All holes reinforced with steel washers.

	A	B	C	D	E	F	G	H
2502/0100	**2 Bolt holes**				**Weight 470g/1.04lb**			
METRIC (mm)	*210*	*50*	*50*	*124*	*9*	*20*		
IMPERIAL (ins)	*8.27*	*1.97*	*1.97*	*4.88*	*0.35*	*0.79*		
2502/0200	**2 Bolt holes**				**Weight 680g/1.5lb**			
METRIC (mm)	*120*	*85*	*75*	*63*	*14*	*25*		
IMPERIAL (ins)	*4.72*	*3.35*	*2.95*	*2.48*	*0.55*	*0.98*		
2502/0300	**2 Bolt holes**				**Weight 1.1kg/2.4lb**			
METRIC (mm)	*190*	*80*	*80*	*86*	*14*	*27*		
IMPERIAL (ins)	*7.48*	*3.15*	*3.15*	*3.39*	*0.55*	*1.06*		
2502/0400	**2 Bolt holes**				**Weight 1.7kg/3.7lb**			
METRIC (mm)	*250*	*90*	*80*	*118*	*13*	*28*		
IMPERIAL (ins)	*9.84*	*3.54*	*3.15*	*4.65*	*0.51*	*1.10*		
2502/0500	**2 Bolt holes**				**Weight 3.2kg/7lb**			
METRIC (mm)	*350*	*100*	*100*	*200*	*14*	*30*		
IMPERIAL (ins)	*13.78*	*3.94*	*3.94*	*7.87*	*0.55*	*1.18*		

Rubber Buffers

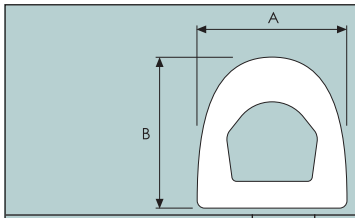

'D' BUFFER "PROTECTOR"

Black synthetic rubber.
2.4 m (8') length.

	A	B	C	D	E	F	G	H
2512/031					**Weight 15.6kg/34lb**			
METRIC (mm)	92	92						
IMPERIAL (ins)	3.62	3.62						

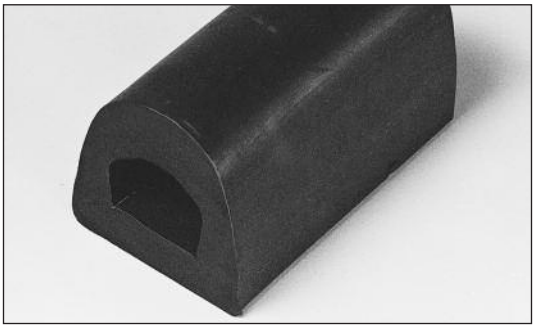

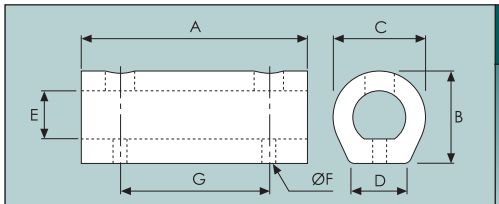

'D' BUFFER

Black synthetic rubber.

	A	B	C	D	E	F	G	H
2511/007					**Weight 870g/1.9lb**			
METRIC (mm)	203	80	80	55	40	9.5	134	
IMPERIAL (ins)	8.00	3.15	3.15	2.17	1.58	0.37	5.26	

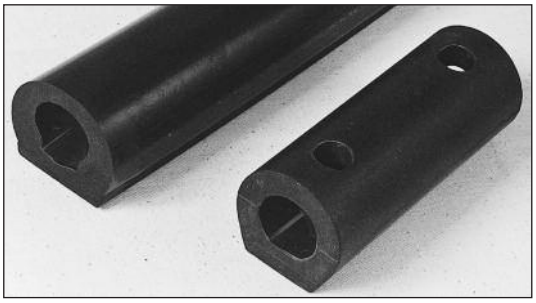

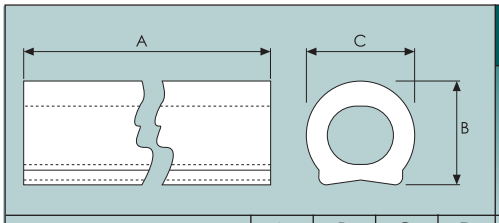

'D' BUFFER

Black synthetic rubber.

	A	B	C	D	E	F	G	H
2511/002					**Weight 11kg/24lb**			
METRIC (mm)	2550	75	84					
IMPERIAL (ins)	100	2.95	3.31					

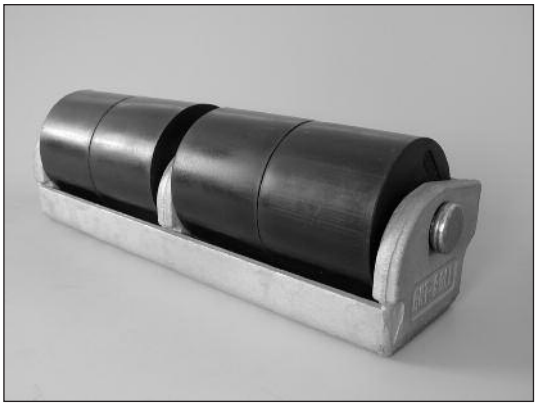

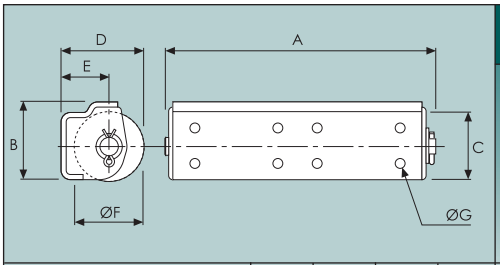

'BUT-ROLL' ROLLER BUFFERS

Horizontal buffer with 4 rollers held captive in a galvanised steel bracket.
Replacement roller: 2515/0402.

	A	B	C	D	E	F	G	H
2515/0400					**Weight 11.3kg/25lb**			
METRIC (mm)	395	116	100	118	68	100	13	
IMPERIAL (ins)	15.6	4.57	3.94	4.65	2.68	3.94	0.51	

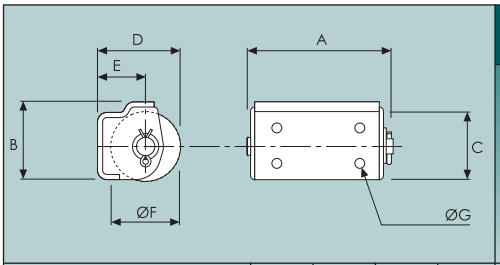

'BUT-ROLL' ROLLER BUFFERS

Horizontal buffer with 2 rollers held captive in a galvanised steel bracket.
Replacement roller: 2515/0402.

	A	B	C	D	E	F	G	H
2515/0401					**Weight 6.2kg/13.7lb**			
METRIC (mm)	216	116	100	118	68	100	13	
IMPERIAL (ins)	8.50	4.57	3.94	4.65	2.68	3.94	0.51	

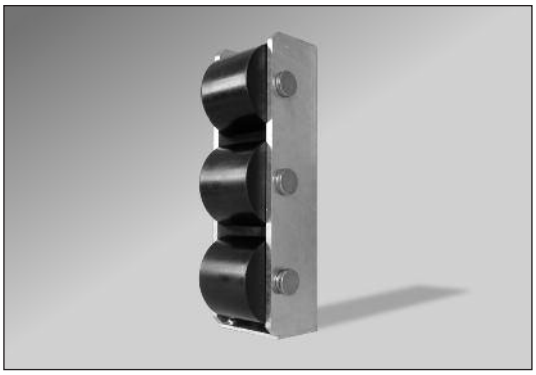

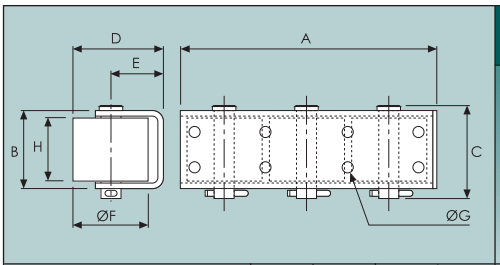

'BUT-ROLL' ROLLER BUFFERS

Slimline design.
Vertical buffer with 3 rollers held captive in a galvanised steel bracket.
Replacement roller: 2515/1402.

	A	B	C	D	E	F	G	H
2515/1403					**Weight 9.8kg/21.6lb**			
METRIC (mm)	344	80	104	118	70	100	13	65
IMPERIAL (ins)	13.5	3.15	4.10	4.65	2.76	3.94	0.51	2.56

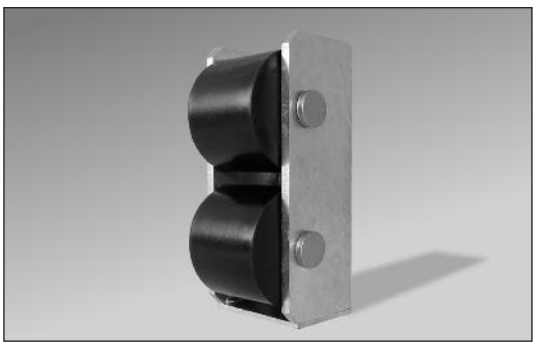

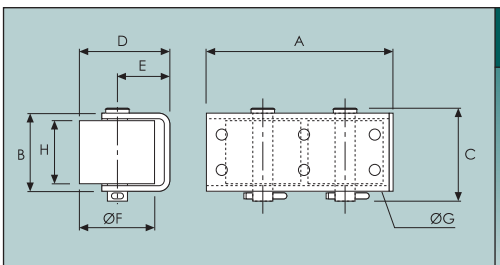

'BUT-ROLL' ROLLER BUFFERS

Slimline design.
Vertical buffer with 2 rollers held captive in a galvanised steel bracket.
Replacement roller: 2515/1402

	A	B	C	D	E	F	G	H
2515/1404					**Weight 6.6kg/14.6lb**			
METRIC (mm)	234	80	104	118	70	100	13	65
IMPERIAL (ins)	9.21	3.15	4.10	4.65	2.76	3.94	0.51	2.56

Continued overleaf . . .

Rubber Buffers

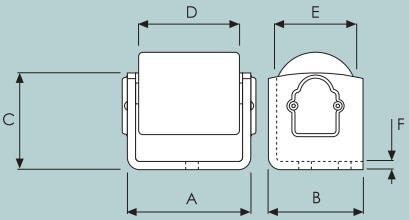

SPRING LOADED ROLLER BUFFERS

Horizontal buffers with galvanised steel bracket & single polypropylene roller. Spring loaded roller spindle for greater shock absorbtion.

		A	B	C	D	E	F	G	H
2516/001	**TSL Roller Buffer**					**Weight 2.3kg/5.1lb**			
METRIC (mm)		*125*	*80.0*	*80.0*	*98.0*	*67*	*8.00*		
IMPERIAL (ins)		*4.92*	*3.15*	*3.15*	*3.86*	*2.64*	*0.32*		
2516/002	**TSR Roller Buffer**					**Weight 2.8kg/6.2lb**			
METRIC (mm)		*120*	*95.0*	*95.0*	*98.0*	*82.0*	*8.00*		
IMPERIAL (ins)		*4.72*	*3.74*	*3.74*	*3.86*	*3.23*	*0.32*		
2516/011	**Replacement spring pack: 4 x springs, 4 x screws, 2 x cover plates**								
2516/012	**Replacement spindle for TSL & TSR**								
2516/015	**Replacement roller for TSL**								
2516/016	**Replacement roller for TSR & TDR**								

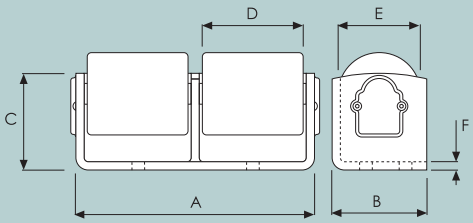

SPRING LOADED ROLLER BUFFERS

Horizontal buffers with galvanised steel bracket & twin polypropylene rollers. Spring loaded roller spindle for greater shock absorbtion.

		A	B	C	D	E	F	G	H
2516/003	**TDR Roller Buffer**					**Weight 4.7kg/10.4lb**			
METRIC (mm)		*220*	*95.0*	*95.0*	*98.0*	*82.0*	*8.00*		
IMPERIAL (ins)		*8.66*	*3.74*	*3.74*	*3.86*	*3.23*	*0.32*		
2516/004	**TDX roller Buffer**					**Weight 6.7kg/14.8lb**			
METRIC (mm)		*310*	*95.0*	*95.0*	*138*	*82.0*	*8.00*		
IMPERIAL (ins)		*12.2*	*3.74*	*3.74*	*5.43*	*3.23*	*0.32*		
2516/011	**Replacement spring pack: 4 x springs, 4 x screws, 2 x cover plates**								
2516/013	**Replacement spindle for TDR**								
2516/014	**Replacement spindle for TDX**								
2516/016	**Replacement roller for TSR & TDR**								
2516/017	**Replacement roller for TDX**								

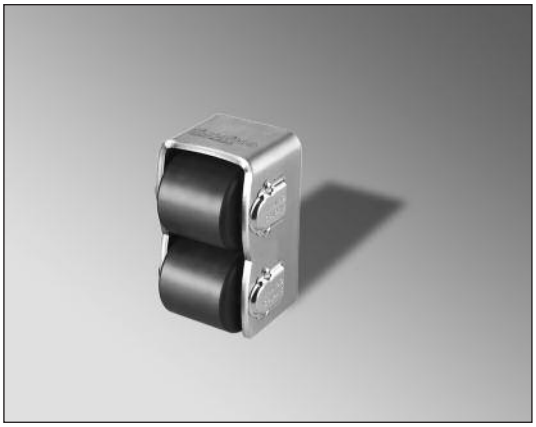

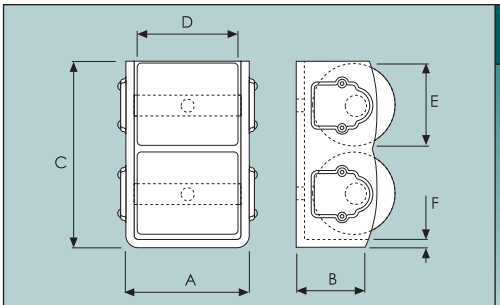

SPRING LOADED ROLLER BUFFERS

Vertical buffer with galvanised steel bracket & polypropylene rollers. Spring loaded roller spindles for greater shock absorbtion.

		A	B	C	D	E	F	G	H
2516/022	**Roller Buffer**					**Weight 4.5kg/4.4lb**			
METRIC	*(mm)*	*100*	*90.0*	*180*	*75.0*	*80.0*	*8.00*		
IMPERIAL	*(ins)*	*3.94*	*3.54*	*7.09*	*2.95*	*3.15*	*0.32*		
2516/011	**Replacement spring pack: 4 x springs, 4 x screws, 2 x cover plates**								
2516/018	**Replacement spindle**								
2516/019	**Replacement roller**								

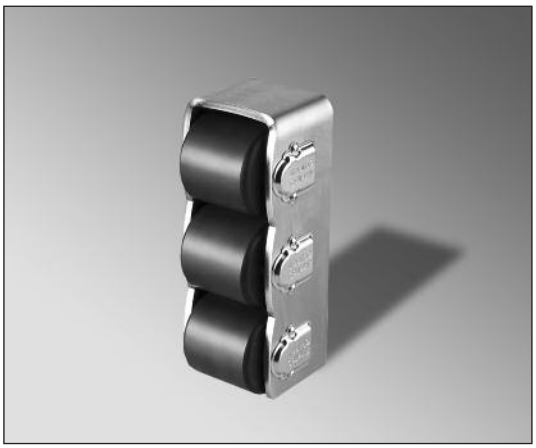

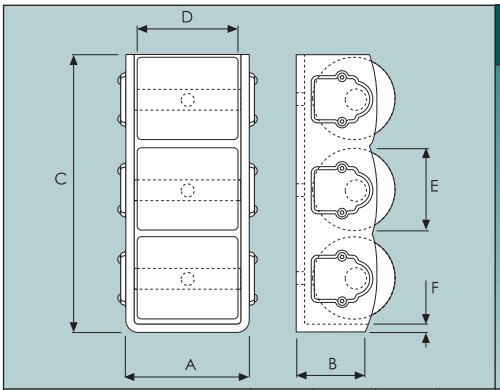

SPRING LOADED ROLLER BUFFERS

Vertical buffer with galvanised steel bracket & polypropylene rollers. Spring loaded roller spindles for greater shock absorbtion.

		A	B	C	D	E	F	G	H
2516/033	**Roller Buffer**					**Weight 4.2kg/9.3lb**			
METRIC	*(mm)*	*100*	*90.0*	*265*	*75.0*	*80.0*	*8.00*		
IMPERIAL	*(ins)*	*3.94*	*3.54*	*10.4*	*2.95*	*3.15*	*0.32*		
2516/011	**Replacement spring pack: 4 x springs, 4 x screws, 2 x cover plates**								
2516/018	**Replacement spindle**								
2516/019	**Replacement roller**								

Rubber Buffers

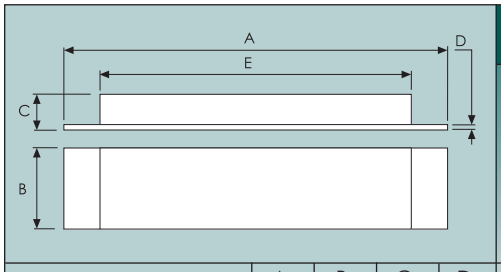

TIPPER PAD

A synthetic rubber pad bonded to a metal plate.

	A	B	C	D	E	F	G	H
9922/101	**Mild steel plate**				**Weight 1.4kg/3.1lb**			
METRIC (mm)	*355*	*75.0*	*32.0*	*3.00*	*288*			
IMPERIAL (ins)	*14.0*	*2.95*	*1.26*	*0.12*	*11.3*			
9922/103	**Mild steel plate**				**Weight 1.8kg/4lb**			
METRIC (mm)	*355*	*75.0*	*40.0*	*3.00*	*288*			
IMPERIAL (ins)	*14.0*	*2.95*	*1.58*	*0.12*	*11.3*			
9922/201	**Aluminium plate**				**Weight 1.1kg/2.4lb**			
METRIC (mm)	*355*	*75.0*	*32.0*	*5.00*	*288*			
IMPERIAL (ins)	*14.0*	*2.95*	*1.26*	*0.20*	*11.3*			

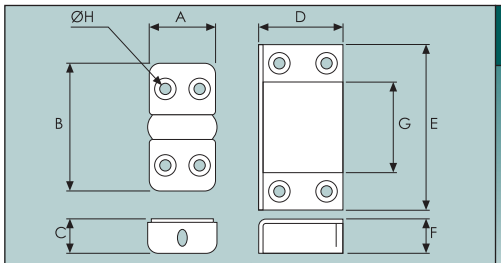

DOOR DOVETAIL

Black japanned finish. Pressed steel construction.

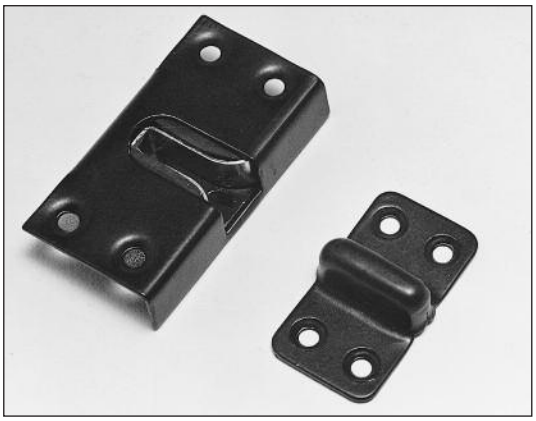

	A	B	C	D	E	F	G	H
2468/002	**Male**				**Weight 30g/1.1oz**			
2468/003	**Female**				**Weight 100g/3.5oz**			
METRIC (mm)	*30*	*56*	*16*	*40*	*77*	*16*	*42*	*4.5*
IMPERIAL (ins)	*1.18*	*2.21*	*0.63*	*1.58*	*3.03*	*0.63*	*1.65*	*0.18*

BLACK RUBBER MATTING

Sold by the linear metre.
Weight shown is per metre.

4307/0021 **Castellated** **Weight 3.5kg/7.7lb**

1.2 m (48") wide x 3 mm (0.125") thick
10 m (32') rol

4532/0021 **Fine fluted** **Weight 4kg/8.9lb**

1.2 m (48") wide x 3 mm (0.125") thick
10 m (32") roll.

4450/001 **Flat, canvas reinforced** **Weight 5.3kg/11.8lb**

914 mm (36") wide x 3 mm (0.125") thick
Sold per metre.

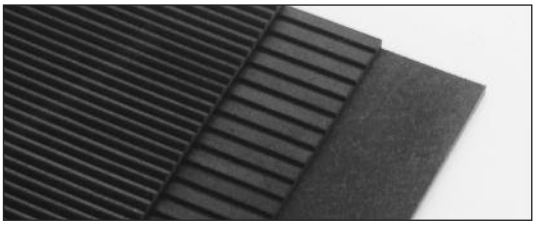

Fender Strips

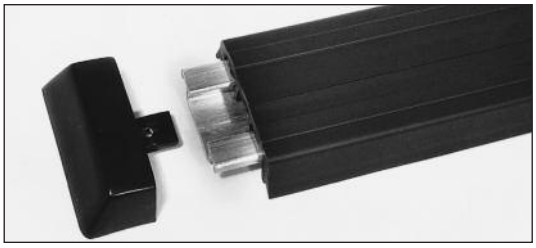

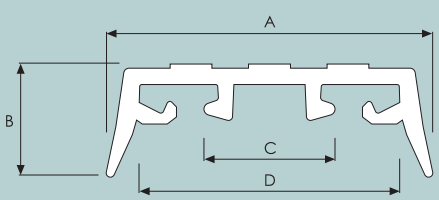

FENDER STRIP

Black UV stable P.V.C.
Working temperature range -25°C to +80°C.
Supplied in 25m coils.

	A	B	C	D	E	F	G	H
5444/001					**Weight 13.5kg/29.8lb**			
METRIC (mm)	*56.0*	*19.0*	*22.0*	*44.0*				
IMPERIAL (ins)	*2.21*	*0.75*	*0.87*	*1.73*				

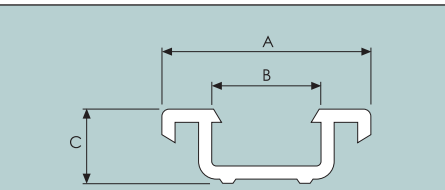

ALUMINIUM CARRIER

Supplied in 4m lengths.

	A	B	C	D	E	F	G	H
5444/002					**Weight 1.8kg/4lb**			
METRIC (mm)	*43.5*	*22.0*	*10.5*					
IMPERIAL (ins)	*1.71*	*0.87*	*0.40*					

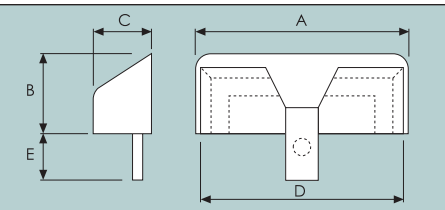

END CAPS

Black finish.

	A	B	C	D	E	F	G	H
5444/003	**Polycoated aluminium**				**Weight 30g/1.1oz**			
5444/004	**Plastic**				**Weight 10g/0.4oz**			
METRIC (mm)	*71.5*	*26.0*	*19.0*	*68.5*	*16.0*			
IMPERIAL (ins)	*2.82*	*1.02*	*0.75*	*2.70*	*0.63*			

DOUBLE 'D' FENDER

Fender = Black marine grade neoprene.
Strip = Marine grade stainless steel, with Ø5 mm
Fixing holes at approx. 79 mm (3.11") centres.
Optional black PVC insert is available to cover both strip & screw heads for 7666/103, 104 & 105.

FENDER	WIDTH	STAND-OFF	COIL LENGTH	COIL WEIGHT	END MOULDINGS	CORNER MOULDINGS
7666/101	22mm (0.875")	14mm (0.562")	36.5m (120')	13.8kg (30.5lb)	/	/
7666/102	32mm (1.25")	16mm (0.625")	30m (100')	20kg (44.5lb)	/	/
7666/103A	38mm (1.5")	13mm (0.5")	36.5m (120')	20.7kg (45.7lb)	7666/003	/
7666/103	45mm (1.75")	19mm (0.75")	30.5m (100')	27.5kg (60.7lb)	7666/002	/
7666/104	51mm (2")	25mm (1")	18.3m (60')	28.8kg (63.6lb)	7666/124	/
7666/105	60mm (2.375")	32mm (1.25")	12.2m (40')	30.6kg (67.6lb)	7666/015	7666/005

Walsall: 01922 471000 Heywood: 01706 692110 Romsey: 01794 525870

www.albert-jagger.co.uk

Fuel Filler Flaps

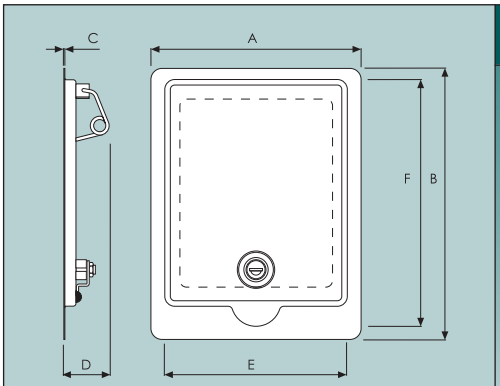

FUEL FILLER FLAP

Pressed mild steel with a spring loaded lid. Locking versions supplied with two keys. Dimensions E & F refer to cut-out.

	A	B	C	D	E	F	G	H
1440/100	**Zinc plated, Non locking**							
1440/200	**Zinc plated, locking - mixed keys**							
1440/300	**Zinc plated, locking - random keys**							
1441/100	**Black powder coating, Non locking**							
1441/200	**Black powder coating, locking - mixed keys**							
1441/300	**Black powder coating, locking - random keys**							
METRIC (mm)	*190*	*245*	*1.00*	*40*	*165*	*222*		
IMPERIAL (ins)	*7.48*	*9.65*	*0.04*	*1.58*	*6.50*	*8.75*		

www.albert-jagger.co.uk Walsall: 01922 471000 Heywood: 01706 692110 Romsey: 01794 525870

A choice of two PSV first-aid kits, designed to comply with the requirements of the Road Traffic Act 1989 and the Mini-Bus Regulation 1990.

Both kits contain:

2	*No. 16 sterile eye-pads with bandage*
10	*Alcohol free cleansing wipes*
1	*7.5 cm conforming bandage*
2	*Triangular bandage (non woven)*
40	*Assorted sterile adhesive plasters*
3	*No. 2 sterile large ambulance dressing*
1	*Pair of blunt ended scissors*
12	*Assorted safety pins*
1	*First aid guidance card*

Top: H2740010
Centre: H2740009
Bottom: H274A144

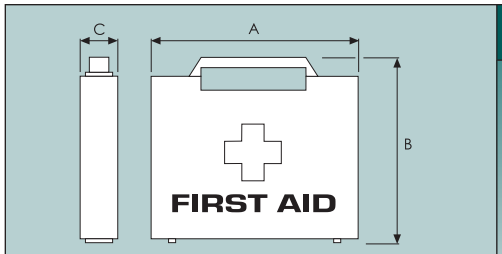

FIRST-AID KIT

For public service vehicles (PSV). Green polypropylene case with carrying handle.

	A	B	C	D	E	F	G	H
1230/10220					**Weight 560g/1.2lb**			
METRIC (mm)	*270*	*182*	*90.0*					
IMPERIAL (ins)	*10.6*	*7.17*	*3.54*					

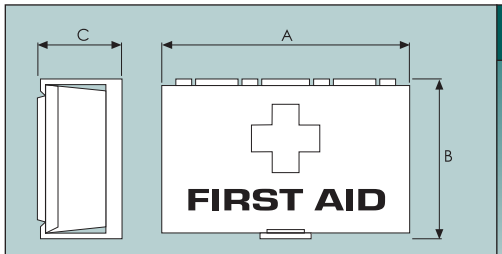

FIRST-AID KIT

For public service vehicles (PSV). Green polypropylene case with mounting bracket.

	A	B	C	D	E	F	G	H
1230/10221					**Weight 610g/1.4lb**			
METRIC (mm)	*265*	*175*	*85*					
IMPERIAL (ins)	*10.4*	*6.89*	*3.35*					

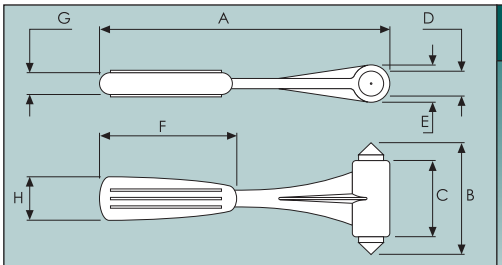

EMERGENCY HAMMER

Red polypropylene moulding with a steel core. Yellow passivated and hardened tips.

	A	B	C	D	E	F	G	H
H2740009					**Weight 70g/2.5oz**			
METRIC (mm)	*151*	*56*	*40*	*12*	*17*	*68*	*10*	*21*
IMPERIAL (ins)	*5.95*	*2.21*	*1.58*	*0.47*	*0.67*	*2.68*	*0.39*	*0.83*

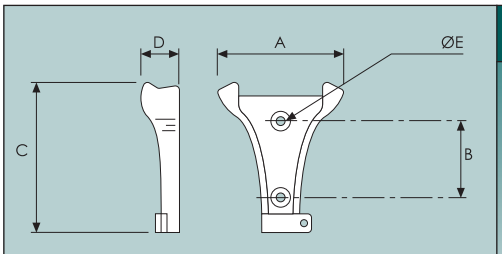

HOLSTER MOUNT

For use with emergency hammer. Grey polypropylene. H2740010 tabbed for tamper proofing.

	A	B	C	D	E	F	G	H
H2740010	**Tabbed (shown)**				**Weight 10g/0.4oz**			
H274A144	**Clip-in**				**Weight 10g/0.4oz**			
METRIC (mm)	*63.5*	*40.0*	*76.0*	*18.0*	*3.70*			
IMPERIAL (ins)	*2.50*	*1.58*	*3.00*	*0.71*	*0.15*			

Walsall: 01922 471000 Heywood: 01706 692110 Romsey: 01794 525870

www.albert-jagger.co.uk

Fire Extinguishers

ABC DRY POWDER FIRE EXTINGUISHERS

1225/003	1kg, refillable.
1225/004	2kg, refillable
1225/010	6kg, refillable

A range of dry powder fire extinguishers with squeeze-grip handles, a built-in pressure gauge, and are supplied complete with plastic coated mounting brackets. They can be used for vehicles, boats, caravans, shops, factories, garages workshops and also in the home.

ABC DRY POWDER FIRE EXTINGUISHERS ARE SUITABLE FOR:

CLASS A: Fires involving paper, wood, straw, textiles, and other solids containing carbonaceous materials.
CLASS B: Fires involving petrol, oil, fat and other flammable liquids.
CLASS C: Gaseous fires.
CLASS D: Fires involving live electrical equipment.

NB: All dry powder fire extinguishers are colour coded in accordance to national regulations - BSEN3.

AFFF FOAM FIRE EXTINGUISHERS

1225/006	2 litre, refillable
1225/007	1 litre, refillable

A range of AFFF foam fire extinguishers complete with squeeze-grip handles, a built-in pressure gauge, and are supplied complete with plastic coated mounting brackets.

AFFF FOAM FIRE EXTINGUISHERS ARE SUITABLE FOR:

CLASS A: Fires involving paper, wood, straw, textiles, and other solids containing carbonaceous materials.
CLASS B: Fires involving petrol, oil, fat and other flammable liquids.

NB: All AFFF foam fire extinguishers are colour coded in accordance to national regulations - BSEN3.

		1225/003	1225/004	1225/010	1225/006	1225/007
PRODUCT DATA	***Nominal Contents***	1kg	2kg	6kg	2l	0.9l (nom)
	Height (including bracket)	325 mm	440 mm	520 mm	410 mm	336 mm
	Width (including bracket)	102 mm	145 mm	240 mm	122 mm	110 mm
	Min. Weight Charged (incl. bracket)	1.7kg	3.2kg	9.8kg	3.06kg	1.37kg
	Fire Rating (to BS EN3:1997)	5A/34B	13A/70B	43A/183B	3A/34B	21B
	Discharge Duration	8 secs.	13 secs.	16 secs.	28 secs.	11 secs.
	Discharge Range	2-3 m	2-3m	5m	2-3m	2-3m
	Working Temperature	-20°C to +50°C	-20°C to +60°C	-20°C to +60°C	-15°C to +60°C	-15°C to +50°C
	Working Pressure (at +20°C)	12 bar	12 bar	12 bar	12 bar	12 bar
	Min. Burst Pressure	55 bar	55 bar	55 bar	50 bar	50 bar
MATERIAL DATA	***Extinguishant***	Mon ammonium phosphate based ABC dry powder			AFFF alcohol resistant foam with freezing point depressant	
	Container	Aluminium to Din 1712 Part 3				
	Propellent	Dry nitrogen				
	Gauge	Nickel plated brass with polycarbonate lens				
	Valve	Hot pressed brass, nickel plated NOTE: valve has integral seal to allow gauge to be removed for checking.				BK 261, high emission valve
	Handles	Pressed steel, epoxy coated				ABS
	Wall bracket	Ø5 mm steel wire, nylon coated				

www.albert-jagger.co.uk Walsall: 01922 471000 Heywood: 01706 692110 Romsey: 01794 525870

Fire Extinguisher Boxes

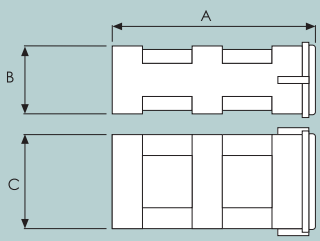

FIRE EXTINGUISHER & BOX

6kg ABC powder, fire extinguisher suitable for all fires except metal & gaseous fires with an explosion risk.
Complies with BS EN 3 : 1996.
Polyethylene box is supplied with zinc plated steel fixing kit.

	A	B	C	D	E	F	G	H
1225/1000								
METRIC (mm)	*524*	*190*	*270*					
IMPERIAL (ins)	*20.6*	*7.48*	*10.6*					

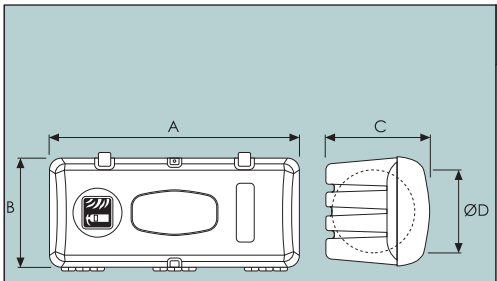

FIRE EXTINGUISHER BOX

Manufactured from polypropylene with a red top & black base.
For use with 6 & 9kg extinguishers with Ø200mm max.
Supplied with support strap, backplate, fixing kit & full instructions.

	A	B	C	D	E	F	G	H
1223/155					**Weight 4kg/8.8lb**			
METRIC (mm)	*674*	*313*	*255*	*200*				
IMPERIAL (ins)	*26.5*	*12.3*	*10.0*	*7.87*				

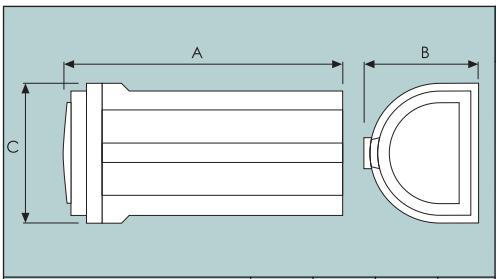

FIRE EXTINGUISHER BOX

Moulded in red, polyethylene for high impact & chemical resistance. Fitted with an internal restraining strap and supplied with mounting brackets. Accomodates fire extinguishers up to 630 mm high.

	A	B	C	D	E	F	G	H
1224/100					**Weight 6kg/13lb**			
METRIC (mm)	*660*	*280*	*340*					
IMPERIAL (ins)	*26*	*11*	*13.4*					

Toolboxes

PARLOK KÖVER Thermoplastic toolboxes

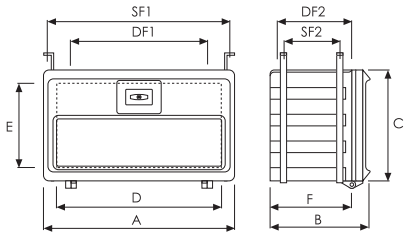

PART NO.	A	B	C	D	E	F	DF1	DF2	SF1	SF2
6789/660	660	460	500	600	415	390	500	300 max.	652	230
6789/661	*Zinc plated, mild steel fixing strap to suit 6789/660*									
6789/800	860	455	500	800	415	390	700	300 max.	792	230
6789/801	*Zinc plated, mild steel fixing strap to suit 6789/800*									
6789/1000	1060	455	500	1000	415	390	900	300 max.	992	230
6789/1001	*Zinc plated, mild steel fixing strap to suit 6789/1000*									

All dimensions in mm. DF = direct fixing. SF = strap fixing.

PARLOK KÖVER Thermoplastic toolboxes

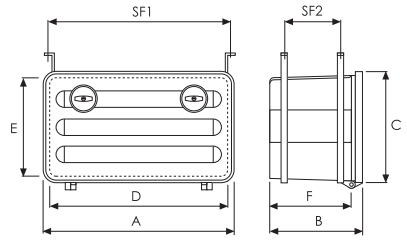

PART NO.	A	B	C	D	E	F	SF1	SF2
6789/5041	700	300	300	640	250	280	690	150
6789/5042	550	450	450	480	320	440	535	250
6789/5043	700	450	500	630	390	440	685	265

All dimensions in mm. SF = strap fixing.

- **RESILIENT -** *manufactured from impact resistant polyethylene offering excellent anti-tear properties.*
- **SECURE -** *multi-point locking system*
- **WATER RESISTANT -** *integral bulb seal between thermoplastic body and lid.*
- **STRONG -** *reinforced ribbing on body with a double skinned lid.*

Designed for direct mounting or via optional fixing brackets. Can be built into side guards according to EC Directives.

ITALY • GROUP BAWER DAKEN • KUBEN

Thermoplastic toolboxes

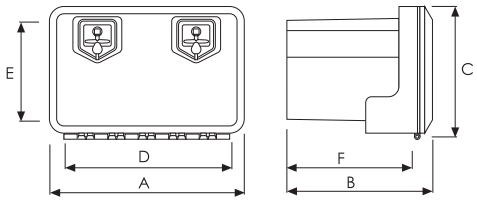

PART NO.	A	B	C	D	E	F
6794/0600	640	485	460	560	355	425
6794/1000	1040	455	520	950	400	390

All dimensions in mm.
NB. 6794/0600 shown with 2 locking 'EUROPLEX' locking T handles. 6794/1000 is supplied complete with three. 2 keys supplied with each handle asembly.

- **ROBUST -** *injection moulded, high-density, thermoplastic polyurethane.*
- **SECURE -** *patented 'EUROPLEX' locking T handles with plastic key covers.*
- **WATER RESISTANT -** *integral rubber seal between body & lid.*
- **STRONG -** *full length hinge & reinforced ribbing on body with a double skinned lid.*

Other sizes available on request as are optional mounting bracketry and gas spring assistance on lids.

Walsall: 01922 471000 Heywood: 01706 692110 Romsey: 01794 525870 www.albert-jagger.co.uk

Handwash Units

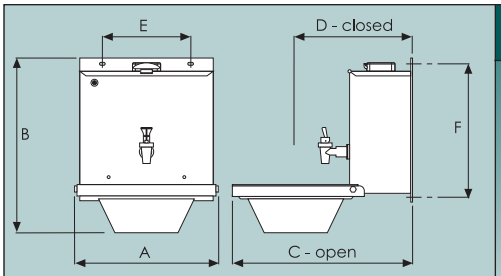

'COMPACT CLASSIC' HANDWASH UNIT

Brushed stainless steel construction.
Complete with stainless steel bowl.
3.1 litre capacity with a single tap.
Full fitting instructions supplied

	A	B	C	D	E	F	G	H
1929/101	**12v, 180w, 15A**				**Weight 3.6kg/7.9lb**			
1929/1010	**24v, 250w, 15A**				**Weight 3.6kg/7.9lb**			
METRIC (mm)	*290*	*350*	*360*	*210*	*180*	*268*		
IMPERIAL (ins)	*11.4*	*13.8*	*14.2*	*8.27*	*7.10*	*10.6*		

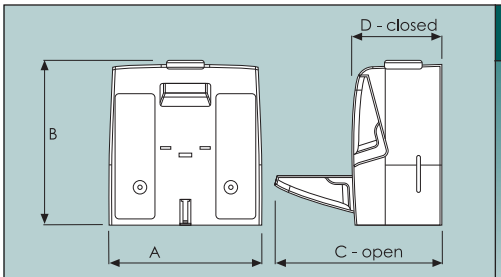

'HANDEMAN' HANDWASH UNIT

Double skinned, impact resistant polyethylene.
Complete with fold down bowl.
2.5 litre capacity with a single tap.
Full fitting instructions supplied

	A	B	C	D	E	F	G	H
1942/0012	**12v, 180w, 15A**				**Weight 3kg/6.8lb**			
1942/0024	**24v, 240w, 10A**				**Weight 3kg/6.8lb**			
METRIC (mm)	*300*	*325*	*315*	*175*				
IMPERIAL (ins)	*11.8*	*12.8*	*12.4*	*6.90*				

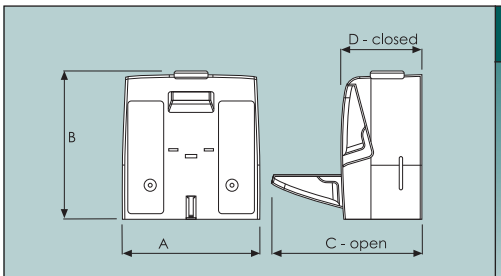

'TEALWASH' HANDWASH UNIT

Double skinned, impact resistant polyethylene.
Complete with loose bowl.
5 litre capacity with a single tap.
Full fitting instructions supplied

	A	B	C	D	E	F	G	H
1942/012	**12v. 300w, 25A**				**Weight 4.8kg/10.6lb**			
1942/024	**24v, 300w, 15A**				**Weight 4.8kg/10.6lb**			
METRIC (mm)	*300*	*220*	*485*	*665*	*360*	*180*	*312*	*180*
IMPERIAL (ins)	*11.8*	*8.66*	*19.1*	*26.2*	*14.2*	*7.09*	*12.3*	*7.09*

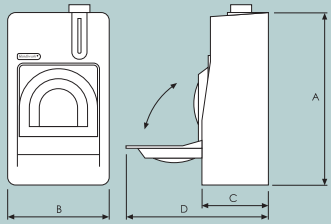

'HANDIWASH' HANDWASH UNIT

Manufactured from impact resistant, UV stable polymers.
8.5 litre capacity with level indicator & two (hot/cold) taps. Full fitting instructions supplied.

	A	B	C	D	E	F	G	H
1920/012	**12v, 10A**				**Weight 5.5kg/12.2lb**			
1920/024	**24v, 7A**				**Weight 5.5kg/12.2lb**			
METRIC (mm)	*520*	*300*	*230*	*405*				
IMPERIAL (ins)	*20.5*	*11.8*	*9.06*	*16.0*				

1920/112	**Optional 12v electrical kit**	
1920/124	**Optional 24v electrical kit**	
	Kits constist of:	
	Round rocker switch	*1*
	Relay (12 or 24v)	*1*
	15A fuse blade	*1*
	5A fuse blade	*1*
	Fuse blade holder	*2*
	Fuse blade holder cover	*2*
	Ø4.5mm single core cable - red	*6 mtr*
	Ø4.5mm single core cable - brown	*6 mtr*
	Ø1mm single core cable - red	*3 mtr*
	Ø1mm single core cable - brown	*3 mtr*
	3/8" split tubing for cable	*6 mtr*
	8 mm terminal insulated ring	*2*
	Terminal PRY 1543, yellow insul	*5*
	Terminal PRY 350, yellow insul	*1*
	Terminal PRR 1541, red insul	*5*
	Terminal PRR 1741, red insul	*3*
	Terminal ring PRR 635, red insul	*2*
	M5 x 16, zinc plated bolts	*2*
	M5, zinc plated nuts	*2*
	M5, zinc plated washers	*2*
	No 10 x 1/2", pozi screws	*2*

Reversing Alarms

BACKALARM™

MEDIUM DUTY

BRIGADE®

For trucks, buses, coaches, industrial vehicles & light, mobile plant. Carefully optimised frequency/loudness characteristics make these units clearly audible under typical working conditions without being a nuisance in the urban/highway environment.

- **LIFETIME WARRENTY**
- Conforms to SAE J994 environmental standards
- Tough, durable, guarenteed waterproof (IP68)
- Solid state, spark free electronics.
- Epoxy sealed against mud, water & vibration.
- Can be steam cleaned * pressure hosed.
- CE & 'e' marked (EMC)

6562/1010	MEDIUM DUTY BACKALARM
	Voltage - 12 -24 volts (DC) Amps - 0.2A Volume - 82 - 102 dB(A) @ 1m Frequency - 1.25 KHz Dimensions - W = 100mm, H = 72mm, D = 32mm Hole centres @ 76 - 82mm

BACKALARM™

MEDIUM DUTY

BRIGADE®

For trucks, buses, coaches, industrial vehicles & light, mobile plant. Carefully optimised frequency/loudness characteristics make these units clearly audible under typical working conditions without being a nuisance in the urban/highway environment.

- **LIFETIME WARRENTY**
- Conforms to SAE J994 environmental standards
- Tough, durable, guarenteed waterproof (IP68)
- Solid state, spark free electronics.
- Epoxy sealed against mud, water & vibration.
- Can be steam cleaned * pressure hosed.
- CE & 'e' marked (EMC)

6562/109	MEDIUM DUTY BACKALARM
	Voltage - 12 -24 volts (DC) Amps - 0.2A Volume - 97 dB(A) @ 1m Frequency - 1.4 KHz Dimensions - W = 105mm, H = 65mm, D = 32mm Hole centres @ 75 - 85mm

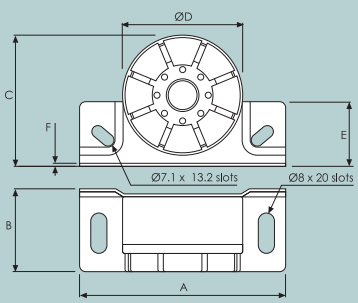

REVERSING ALARM

Rated to IP67.
Impervious to mud, dust & water.
Withstands steam clean & pressure washer.
Pulse tone @ 97dB (A) @1.2m.
voltage spike protected.

	A	B	C	D	E	F	G	H
6563/097	**10-100v (200mA max) Weight 190g/6.7oz**							
METRIC (mm)	*101.6*	*41.0*	*63.0*	*60.0*	*31.3*	*1.5*		
IMPERIAL (ins)	*4.0*	*1.61*	*2.5*	*2.36*	*1.23*	*0.06*		

PERFECTVIEW

COLOUR SYSTEM WITH LED SUPPORT

A cost effective package consisting of a compact 5" TFT colour monitor plus an an exterior camera with LED support and infra-red lighting for excellent night time visibility.
The system switches on automatically when reverse gear is engaged, but it can also be activated manually.
The camera has an integrated microphone, which can be used give the driver instructions from outside the vehicle - audible to the driver via the monitor's speaker.
Dual video inputs on the monitor allows use of either a second exterior camera or even a DVD player.

9634/250	**PERFECTVIEW COLOUR SYSTEM**
	Includes monitor, monitor mounting bracket, remote control, connection cable, adaptor cable, camera, camera mounting bracket, camera sunshield, extension cable, insulation pad, insulating tape & full fitting instructions.
9635/020	**CCD COLOUR CAMERA WITH LED SUPPORT**
	Includes camera, camera mounting bracket, camera sunshield, extension cable, insulation pad, insulating tape & fitting instructions.

MONITOR SPECIFICATIONS

- *5" Colour TFT LCD monitor*
- *Two camera inputs (PAL/NTSC)*
- *Built-in speaker with adjustable volume*
- *Normal or mirror image function*
- *Automatic or manual activation*

Operating Voltage	*11 - 15 V*
Power Consumption	*up to 8 W*
Screen Diagonal	*5"/128mm (visible picture)*
Resolution	*230,000 pixels*
Brightness	*400 cd/m2*
Operating Temperature	*-15°C to +60°C*
Humidity	*10-95 %*
Size (w x h x d)	*143 x 125 x 70 mm (inc bracket)*

CAMERA SPECIFICATIONS

- *Colour CCD camera (PAL)*
- *Electronic brightness adjustment*
- *Sturdy, watertight aluminium housing with steel protective cap & adjustable sunvisor.*
- *Waterproof microphone*
- *120° Wide angle lens*

Power Consumption	*0.2 A*
Image Sensor	*1/4" CCD J type sensor*
Resolution	*270,000 pixels*
Light Sensitivity	*< 1 lux / 0 lux with LED*
Operating Temperature	*-20°C to +65°C*
Vibration Resistance	*8 g*
Lens	*120° diagonal opening angle*
Lens Angle (aprox)	*h = 90°, v=70°*
Protection	*IP67*
Size (w x h x d)	*92 x 68 x 89*

Inverter

PERFECTPOWER

PP1000 INVERTER

A high performing inverter with integrated mains priority circuit, turning 24 V battery voltage into 230 V AC. The integrated mains priority circuit saves the vehicle battery by generating 230 volts automatically from the mains as soon as the external power source is applied, eg. campsites. This compact unit has been specifically designed for mobile use in vehicles such as camper vans, caravans and hospitality trailers to enable use of high consumption household electrical goods such as microwave ovens, kettles, toasters and vacuum cleaners.

5615/024	PERFECTPOWER PP1000 24 V INVERTER
Includes	1 x Inverter
	1 x positive (red) battery cable,
	1 x negative (black) battery cable,
	1 x remote control with 10 metre cable,
	1 x 230 V mains input cable (inc. plug),
	1 x instruction manual.

SPECIFICATIONS

Input voltage	***24 V DC** (22 to 30 V)*
Output voltage/curve	*210 to 230 volts AC/modified sine wave*
Output frequency	*50 ± 2 Hz*
No-load current input	*<0.4 A*
Continuous power (30 min)	***1000 watts***
Peak power	*1600 watts*
Cooling system	*Internal fan*
Efficiency	*Up to 87%*
Mains priority	*Integrated*
Mains input voltage	*230 V AC, 10A*
Remote control	*Supplied with 10m connection cable*
Weight	*4kg*
Dimensions (WxHxD) mm	*210 x 77 x 300*
Quality features	*Electronic overload & short circuit protection* *Over voltage & low voltage auto cut-off* *Automatic reverse pole protection* *Automatic over heat cut-off* *Priority circuit for mains operation* *Remote control*
Test marks	*e-approved to 95/54/EC (EMC guidelines for vehicles), EN 60950.*

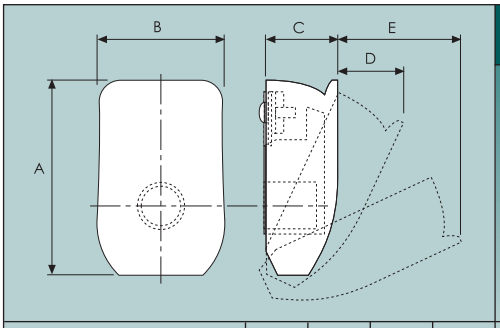

BATTERY CONNECTORS

Overcentre 'snap-on' action.
Manufactured from 316 stainless steel & copper-zinc alloy with a polypropylene cover.
Supplied vacuum packed in pairs.
Suitable for cars, boats, caravans, recreational vehicles & construction equipment.

	A	B	C	D	E	F	G	H
5599/018					**Weight 200g/7.1oz**			
METRIC (mm)	*67*	*47*	*26*	*50*	*68*			
IMPERIAL (ins)	*2.64*	*1.85*	*1.02*	*1.97*	*2.68*			

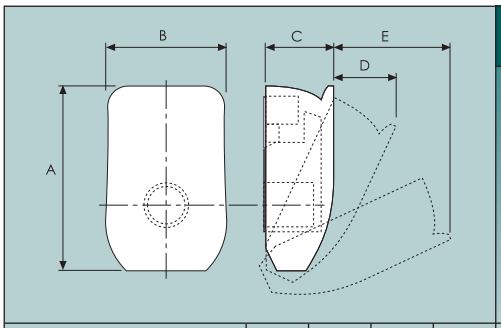

BATTERY CONNECTORS

Overcentre 'snap-on' action.
Manufactured from nickel coated brass with a polypropylene cover.
Supplied in pairs/blister pack.
Suitable for cars, boats, caravans, recreational vehicles & construction equipment.

	A	B	C	D	E	F	G	H
5599/019	**Crimp-on**				**Weight 200g/7.1oz**			
METRIC (mm)	*67.0*	*47.0*	*26.0*	*50.0*	*68.0*			
IMPERIAL (ins)	*2.64*	*1.85*	*1.02*	*1.97*	*2.68*			

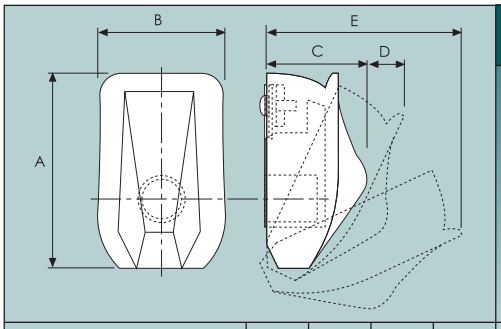

HEAVY DUTY BATTERY CONNECTORS

Overcentre 'snap-on' action.
Manufactured from nickel coated brass & 316 stainless steel with a polypropylene cover.
Supplied in pairs/blister pack.
Suitable for cars, boats, caravans, recreational vehicles & construction equipment.

	A	B	C	D	E	F	G	H
5599/021	**Clamp-on**				**Weight 220g/7.8oz**			
METRIC (mm)	*67.0*	*47.0*	*40.0*	*20.0*	*70.0*			
IMPERIAL (ins)	*2.64*	*1.85*	*1.58*	*0.79*	*2.76*			

Wheel Chocks

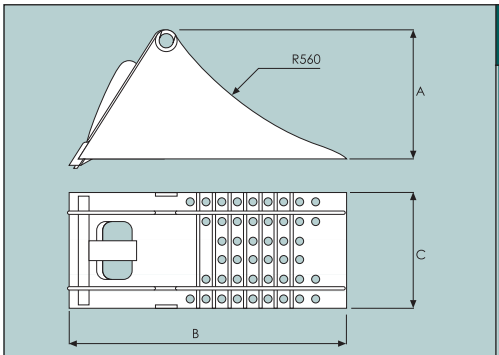

WHEEL CHOCK

UV stabilised polypropylene, Signal yellow (Ral 1023).
Conforms to DIN 76051-53 (nov '92).
Suitable for all vehicles that are required to comply with current legislation/ADR regulations.
Refer 6436/020 for holder.
6,500kg maximum load.

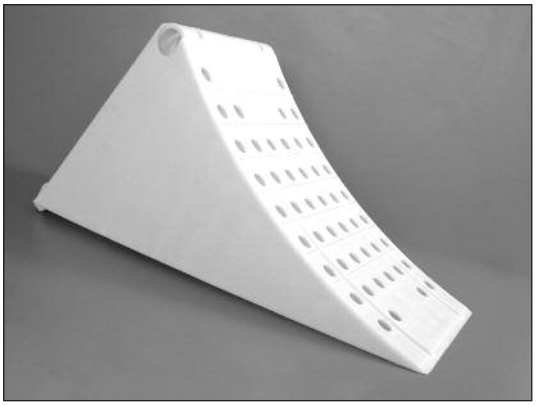

	A	B	C	D	E	F	G	H
6436/010					**Weight 1.9kg/4.2lb**			
METRIC (mm)	*230*	*470*	*200*					
IMPERIAL (ins)	*9.06*	*18.5*	*7.87*					

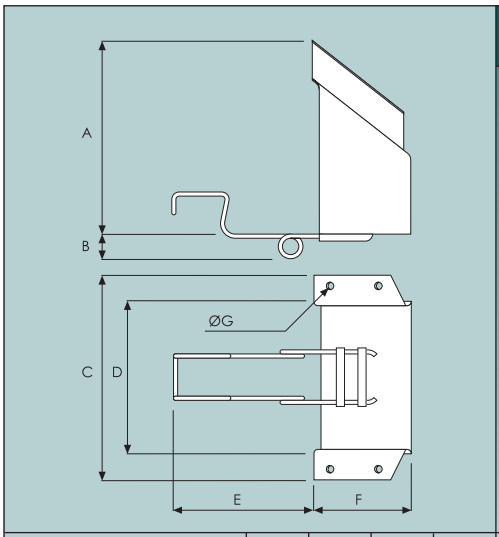

WHEEL CHOCK HOLDER

For use with 6436/010.
Spring steel construction with a black primer finish.

	A	B	C	D	E	F	G	H
6436/020					**Weight 1.4kg/3.1lb**			
METRIC (mm)	*240*	*30*	*260*	*210*	*180*	*120*	*8.5*	
IMPERIAL (ins)	*9.45*	*1.18*	*10.2*	*8.27*	*7.09*	*4.72*	*0.34*	

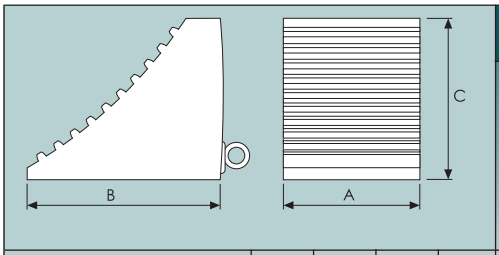

HEAVY DUTY WHEEL CHOCK

Abrasive resistant rubber compound.
Eyebolt I.D = 11 mm (0.43")

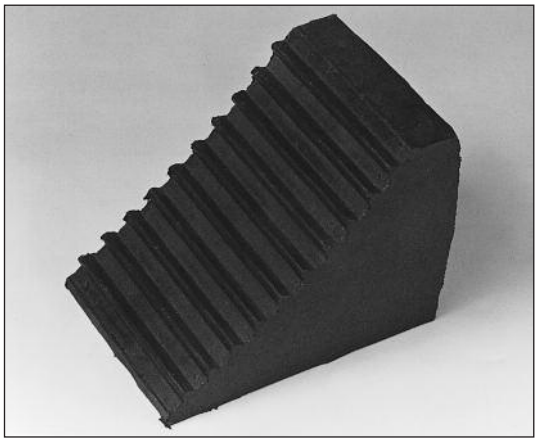

	A	B	C	D	E	F	G	H
6437/001					**Weight 4.96kg/11lb**			
METRIC (mm)	*160*	*235*	*195*					
IMPERIAL (ins)	*6.30*	*9.25*	*7.68*					

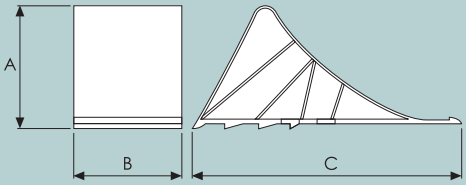

WHEEL CHOCK

Black plastic with a maximum load rating of 1600kg.
For use with 6437/004 holder.

	A	B	C	D	E	F	G	H
6437/002					**Weight 220g/7.8oz**			
METRIC (mm)	*100*	*90*	*220*					
IMPERIAL (ins)	*3.94*	*3.54*	*8.67*					

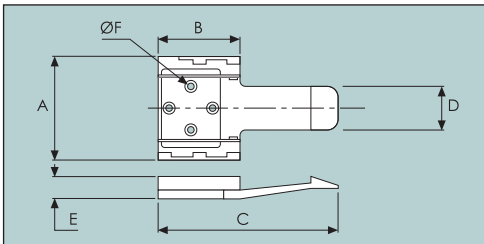

WHEEL CHOCK HOLDER

Black plastic.
For use with 6437/002 wheel chock.

	A	B	C	D	E	F	G	H
6437/004					**Weight 40g/1.4oz**			
METRIC (mm)	*96*	*78*	*168*	*40*	*20*	*6*		
IMPERIAL (ins)	*3.78*	*3.07*	*6.61*	*1.58*	*0.79*	*0.24*		

Notes

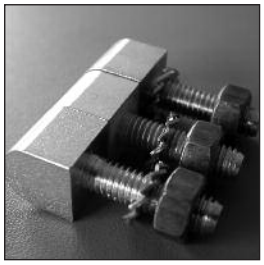

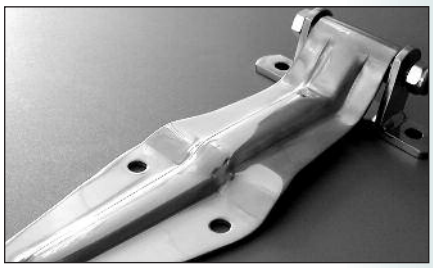

hinges

SELF ALIGNING HINGES.....c1
CONCEALED LOCKER HINGES c2
BUTT HINGES.....c2-c3
CONTINUOUS HINGES.....c4-c7
PLASTIC HINGES.....c7-c9
LIFT-OFF HINGES.....c10-c13
FRICTION HINGES.....c13-c14
CHROME HINGES.....c14
PRESSED STEEL HINGES.....c15-c27
TAIL-LIFT HINGE.....c21
REAR VAN DOOR HINGES.....c22-c27

section

C

HINGES

innovative latching & sealing systems

Industrilas

a reliable & resourceful partner

swing handles quarter turns hinges
seal profiles rod latch systems
compression latches paddle locks
handles toggle fasteners slam bolts

All products **ROHS-compliant** & certified according to both **ISO 9001:2008** & **EN14001:2004 by TÜV**.

Hinges

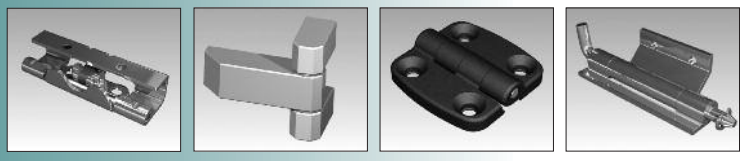

Swing Handles

Klima-flex™ VENTILATION SYSTEMS

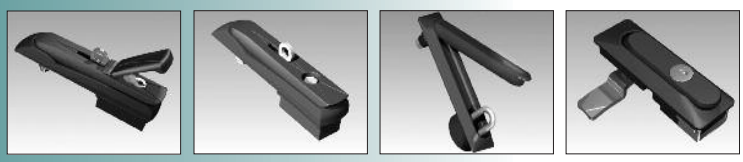

Quarter Turns

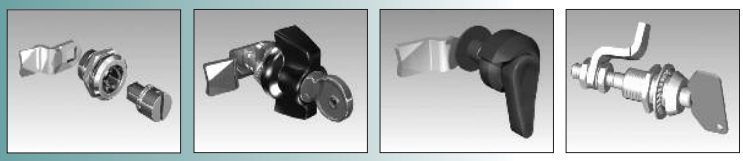

Handles

Vector™

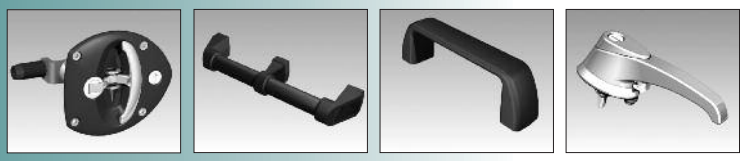

Sealing Profiles

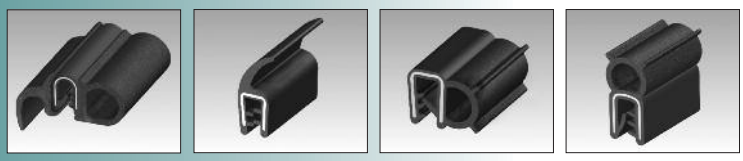

Rod Latch Systems

VISION™

Full product catalogue available on request
2D & 3D CAD models available for download
www.albert-jagger.co.uk

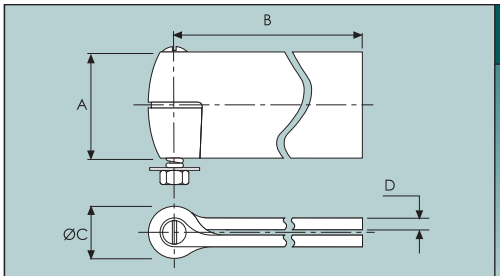

SELF ALIGNING HINGE

Malleable Iron, self colour. 270° opening. Jointed & tensioned with coil spring & brass ball on detachable pin.

	A	B	C	D	E	F	G	H
2212/003 **2212/004**	**Left hand (shown) Right hand**				**Weight 640g/1.4lb**			
METRIC (mm)	*51.0*	*127*	*22.0*	*6.00*				
IMPERIAL (ins)	*2.00*	*5.00*	*0.87*	*0.24*				

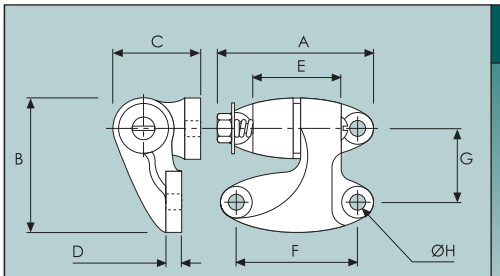

SELF ALIGNING HINGE

Malleable iron, self colour. 270° opening. Jointed & tensioned with coil spring & brass ball on detachable pin.

	A	B	C	D	E	F	G	H
4291/001 **4291/002**	**Left hand (shown) Right hand**				**Weight 260g/9.2oz**			
METRIC (mm)	*66.0*	*57.0*	*37.0*	*60.0*	*35.0*	*51.0*	*34.0*	*8.00*
IMPERIAL (ins)	*2.60*	*2.24*	*1.46*	*0.24*	*1.38*	*2.00*	*1.34*	*0.32*

Self-aligning Hinges

0859/001 **Concealed Locker Hinge - Left hand**
0859/002 **Concealed Locker Hinge - Right hand**

Zinc plated, pressed, mild steel construction with PTFE washers at all hinge points.
Fitted with a Ø13mm ball stud for gas spring attachment via 1252/54 elbow (not supplied - refer page b5).
Specifications for gas springs are application specific, therefore, please contact us for further details.

LEFT HAND SHOWN

CLOSED POSITION

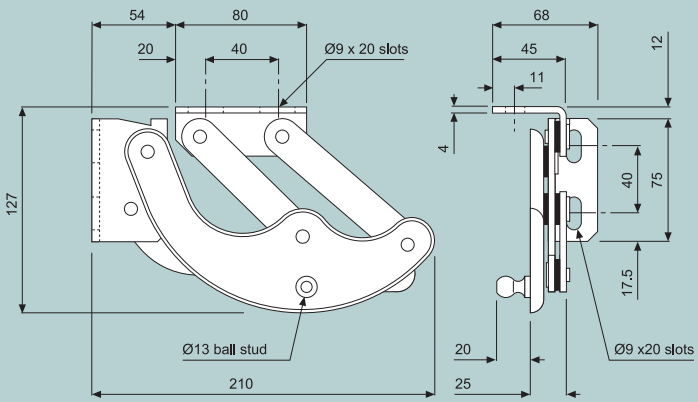

All dimensions shown in MM

OPEN POSITION
Gas spring not included, shown for illustration purposes only.

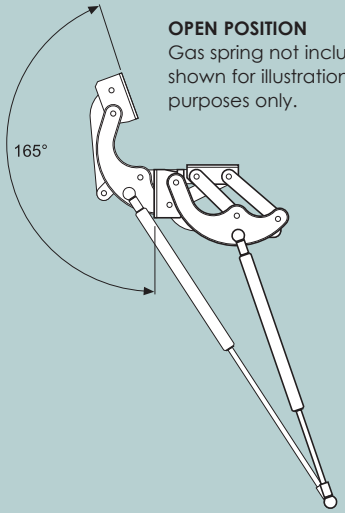

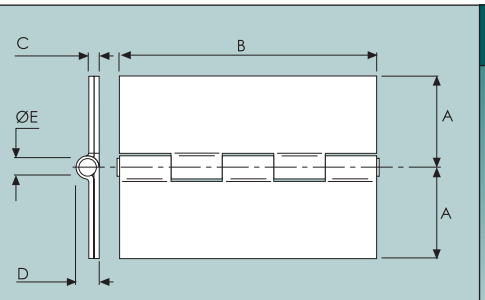

DOUBLE PRESSED BUTT HINGE

Self colour, mild steel.

	A	B	C	D	E	F	G	H
0762/002					**Weight 260g/9.2oz**			
METRIC (mm)	*36.0*	*101*	*4.00*	*10.0*	*6.00*			
IMPERIAL (ins)	*1.42*	*3.98*	*0.16*	*0.40*	*0.24*			

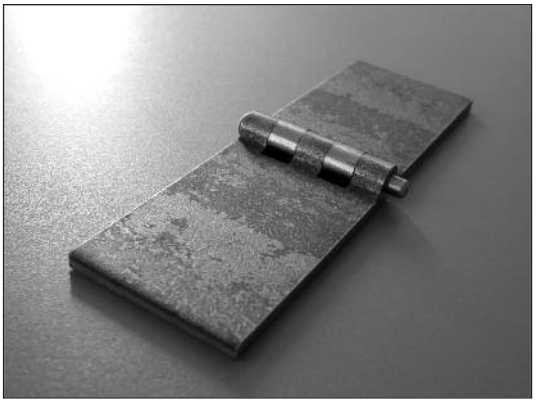

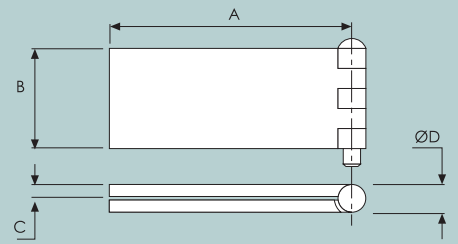

COACH HINGES

Self colour steel.

	A	B	C	D	E	F	G	H
0430/001	**260° opening**				**Weight 330g/11.7oz**			
METRIC (mm)	*80*	*50*	*5*	*12*				
IMPERIAL (ins)	*3.15*	*1.97*	*0.2*	*0.47*				
Solid drawn steel with stainless steel pin.								
0430/002	**260° opening**				**Weight 590g/1.3lb**			
METRIC (mm)	*120*	*50*	*6*	*15*				
IMPERIAL (ins)	*4.72*	*1.97*	*0.24*	*0.60*				
Solid drawn steel with stainless steel pin.								
0430/005	**260° opening**				**Weight 251g/8.9oz**			
METRIC (mm)	*60*	*50*	*5*	*12*				
IMPERIAL (ins)	*2.36*	*1.97*	*0.20*	*0.47*				
Solid drawn steel with stainless steel pin.								
0991/001	**280° opening**				**Weight 240g/8.5oz**			
METRIC (mm)	*70*	*51*	*3.5*	*14*				
IMPERIAL (ins)	*2.75*	*2.00*	*0.14*	*0.55*				
Pressed steel with rolled joint.								

0956/003 Shown

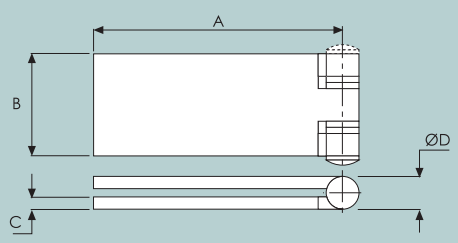

COACH HINGES

Self colour steel with a nylon bush and rolled joint (no lubrication required).

	A	B	C	D	E	F	G	H
0956/003	**280° opening**				**Weight 240g/8.5oz**			
METRIC (mm)	*80*	*50*	*3*	*16*				
IMPERIAL (ins)	*3.15*	*1.97*	*0.12*	*0.63*				
0440/002	**280° opening**				**Weight 590g/1.3lb**			
METRIC (mm)	*120*	*50*	*6*	*15*				
IMPERIAL (ins)	*4.72*	*1.97*	*0.24*	*0.60*				
0855/001	**Left hand**				**Weight 650g/1.4lb**			
0855/002	**Right hand**							
METRIC (mm)	*76*	*76*	*6*	*25.4*				
IMPERIAL (ins)	*3.00*	*3.00*	*0.24*	*1.00*				
270° opening.								

Continuous Hinge

PIANO HINGE - OPEN FLAT TYPE

SUPPLIED IN 1.8M (6') LENGTHS, UNDRILLED:

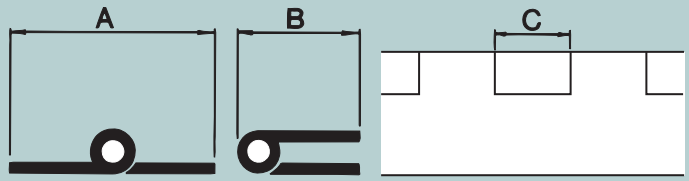

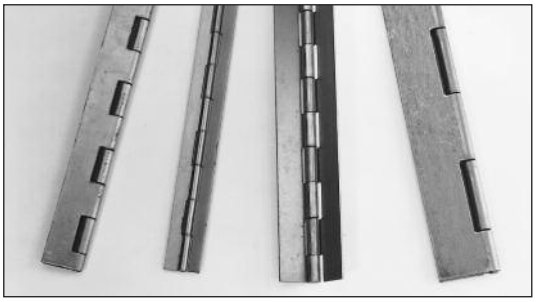

WIDTH OPEN (A)	WIDTH CLOSED (B)	JOINT LENGTH (C)	MATERIAL THICKNESS	PIN DIAMETER	WEIGHT	STEEL
25mm (1")	16mm (0.625")	25mm (1")	1.2mm (18G)	3.2mm (10G)	700g (1.5lb)	**2233/012**
44mm (1.75")	25mm (1")	25mm (1")	1.2mm (18G)	4.4mm (7G)	1.2kg (2.6lb)	**2233/020**
50mm (2")	28mm (1.125")	25mm (1")	1.2mm (18G)	4.4mm (7G)	1.3kg (2.9lb)	**2233/023**
50mm (2")	30mm (1.187")	25mm (1")	1.6mm (16G)	5.8mm (4G)	1.75kg (3.8lb)	**2233/041**
50mm (2")	30mm (1.187")	50mm (2")	2mm (14G)	5.8mm (4G)	2.2kg (4.9lb)	**2233/067**
63mm (2.5")	36mm (1.437")	50mm (2")	2mm (14G)	5.8mm (4G)	2.6kg (5.8lb)	**2233/075**
76mm (3")	44mm (1.75")	50mm (2")	2mm (14G)	5.8mm (4G)	3kg (6.6lb)	**2233/080**
						STAINLESS STEEL
38mm (1.5")	22mm (0.875")	25mm (1")	1.2mm (18G)	3.2mm (10G)	900g (2lb)	**2233/316**
50mm (2")	29mm (1.156")	25mm (1")	1.2mm (18G)	4.4mm (7G)	1.25kg (2.76lb)	**2233/323**
						ALUMINIUM
50mm (2")	29mm (1.156")	25mm (1")	1.6mm (16G)	4.4mm (7G)	550g (1.2lb)	**2233/439**
						ZINC PLATED
50mm (2")	29mm (1.156")	25mm (1")	1.2mm (18G)	4.4mm (7G)	1.28kg (2.8lb)	**2233/623**
76mm (3")	42mm (1.66")	25mm (1")	2mm (14G)	5.8mm (4G)	2.98kg (6.5lb)	**2233/679**
						BRASS
44mm (1.75")	25mm (1")	25mm (1")	1.2mm (18G)	4.4mm (7G)	1.2Kg (2.6lb)	**2233/220**
50mm (2")	30mm (1.187")	50mm (2")	1.6mm (16G)	5.8mm (4G)	1.8kg (4.1lb)	**2233/241**

Other types & sizes available on request.

CLOSED FLAT.

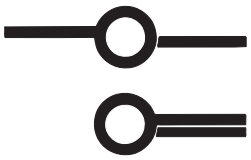

REVERSED JOINT.

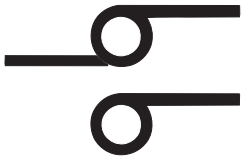

DOUBLE KNUCKLE.

CRANKED.

PIANO HINGE - 304 STAINLESS STEEL

Open flat type (undrilled).

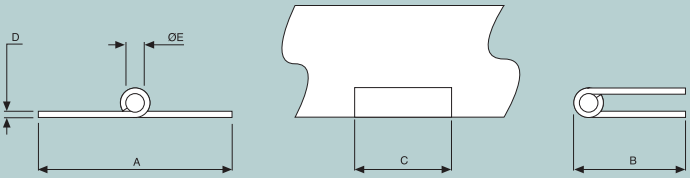

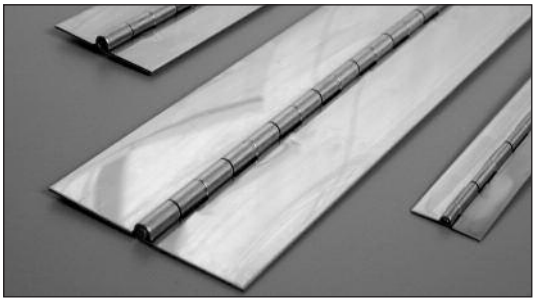

A	B	C	D	ØE	LENGTH	WEIGHT	PART NO.
25mm/1"	14.5mm/0.57"	15mm/0.59"	1mm/0.04"	2mm/0.08"	1800mm/5' 9"	480g/1.1lb	**2234/2500**
40mm/1.58"	22.7mm/0.89"	25.4mm/1.00"	1.2mm/0.05"	3mm/0.12"	1840mm/6'	930g/22.1lb	**2234/4000**
50mm/1.97"	28.5mm/1.12"	15mm/0.59"	1.5mm/0.06"	4mm/0.16"	1800mm/5' 9"	1.5kg/3.3lb	**2234/5000**
57mm/2.24"	32mm/1.26"	15mm/0.59"	1.5mm/0.06"	4mm/0.16"	2160mm/7'	2kg/4.4lb	**2234/5700**
63mm/2.5"	35mm/1.38"	15mm/0.59"	1.5mm/0.06"	4mm/0.16"	1800mm/5' 9"	1.8kg/4lb	**2234/6300**
76mm/3"	41.5mm/1.63"	15mm/0.59"	1.5mm/0.06"	4mm/0.16"	2160mm/7'	2.4kg/5.3lb	**2234/7600**

Continuous Hinge

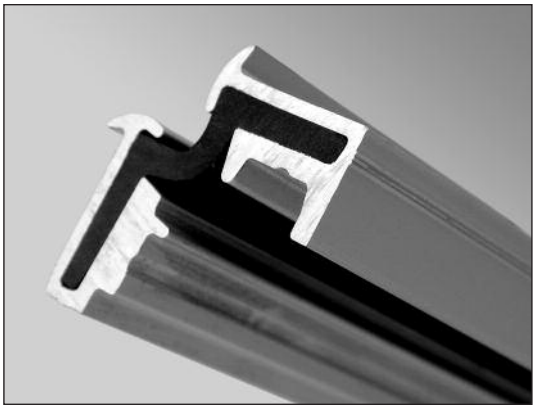

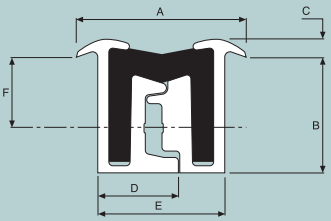

TILA - 'SUPER' CONTINUOUS HINGE

Anodised aluminium carrier with a polyurethane elastomer membrane. Operating temperature range -40°C to +80°C. Hydrolysis & bacteria resistant. 180° opening. Predrilled Ø3.8mm @ 100mm centres.

	A	B	C	D	E	F	G	H
2229/2200	**2000mm length**				**Weight 2.2kg/4.9lb**			
2229/2240	**2400mm length**				**Weight 2.6kg/5.7lb**			
2229/2270	**2700mm length**				**Weight 2.9kg/6.4lb**			
2229/2300	**3000mm length**				**Weight 3.0kg/7.3lb**			
METRIC (mm)	*32.0*	*22.0*	*3.50*	*15.5*	*24.0*	*13.5*		
IMPERIAL (ins)	*1.26*	*0.87*	*0.14*	*0.61*	*0.95*	*0.53*		

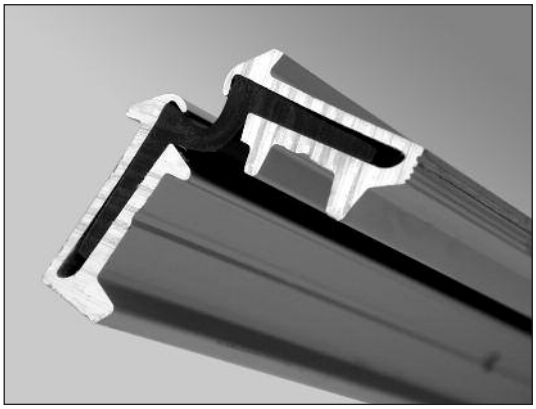

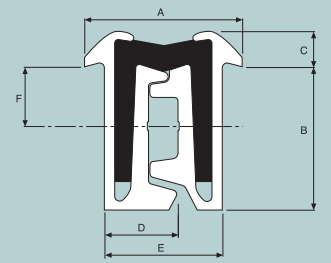

TILA - 'SUPER' CONTINUOUS HINGE

Anodised aluminium carrier with a polyurethane elastomer membrane. Operating temperature range -40°C to +80°C. Hydrolysis & bacteria resistant. 180° opening. Predrilled Ø4.8mm @ 200mm centres.

	A	B	C	D	E	F	G	H
2229/9220	**2200mm length**				**Weight 3.4kg/7.5lb**			
2229/9240	**2400mm length**				**Weight 3.6kg/7.9lb**			
2229/9270	**2700mm length**				**Weight 4.0kg/8.8lb**			
2229/9300	**3000mm length**				**Weight 4.5kg/9.9lb**			
METRIC (mm)	*32.0*	*29.0*	*11.0*	*15.5*	*24.0*	*12.0*		
IMPERIAL (ins)	*1.26*	*1.14*	*0.43*	*0.61*	*0.95*	*0.47*		

Continuous Hinge

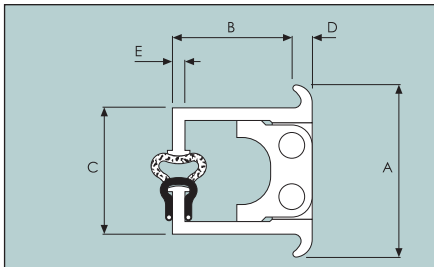

DOUBLE KNUCKLE CONTINUOUS HINGE

Anodised aluminium with 304 stainless steel pins & nylon washers @ joints.
180° opening.
For watertight seal a seperated extrusion is required (see below).

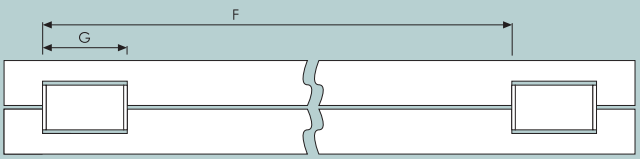

	A	B	C	D	E	F	G	H
2227/2000	**2 metre length**				**Weight 2.3kg/5.1lb**			
2227/2500	**2.5 metre length**				**Weight 2.9kg/6.4lb**			
2227/3000	**3 metre length**				**Weight 3.5kg/7.7lb**			
METRIC (mm)	*33.0*	*24.4*	*25.0*	*3.6*	*2.5*	*300*	*70*	
IMPERIAL (ins)	*1.30*	*0.96*	*0.98*	*0.14*	*0.10*	*11.81*	*2.76*	

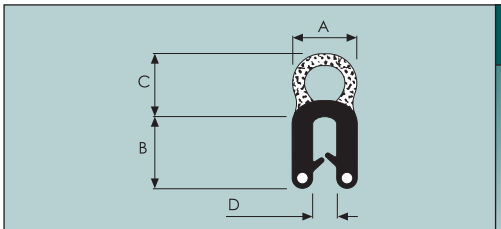

EXTRUDED SEAL

EPDM extrusion on a wire carrier.
For use with 2227 double knuckle continuous hinge for watertight seal.
* Grip range @ 1.5mm - 2.5mm.

	A	B	C	D	E	F	G	H
2227/2001	**2 metre length**				**Weight 230g/8.1oz**			
2227/2501	**2.5 metre length**				**Weight 290g/10.2oz**			
2227/3001	**3 metre length**				**Weight 350g/12.3 oz**			
METRIC (mm)	*8.50*	*9.00*	*9.00*	*				
IMPERIAL (ins)	*0.34*	*0.35*	*0.35*					

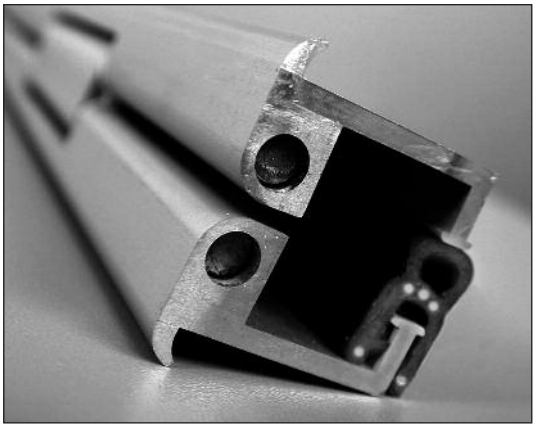

CENTAFLEX
Continuous hinge

A new concept in hinge design. Centaflex is a stylish, one piece, continuous hinge developed taking full advantage of the latest advances in new materials and manufacturing technology.

The membrane of the Centaflex Hinge is a flexible resin comprising of a patented blend of polyester elastomers combining the high strength of engineering resins with excellent flexibility. The result is that the Centaflex Hinge has an excellent flex-life at temperatures ranging from minus 40°C to 50 C (-40° F to 122° F).

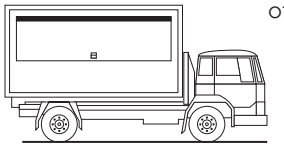

During the manufacturing process; co-extruded rigid P.V.C. profiles are fused together with the molten, Centaflex Hinge membrane creating an extremely strong and resilient hinge. **For example, a 1 metre length fitted horizontally has a S.W.L. of 100 kg, (which is equivalent to 67 lb per 1 ft. length).**

Centaflex is a well designed hinge offering many advantages over conventional continuous hinges currently available.

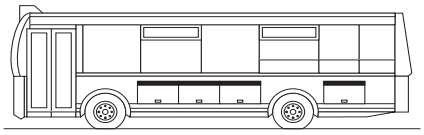

- **Durable - tested to over 50,000 operating cycles.**
- **Secure - interlocking profile when closed**
- **Maintenance free.**
- **Aesthetically pleasing - low exterior profile.**
- **Concealed fixings.**
- **Easy to fit.**
- **Weather-proof continuous seal.**
- **Corrosion resistant.**
- **U.V. light stabilised**
- **Competitively priced.**
- **Excellent flex-life.**

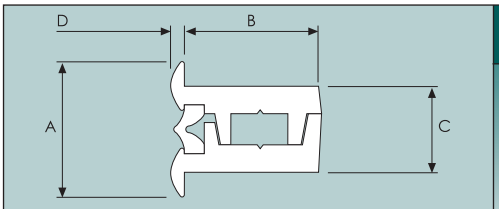

'CENTAFLEX'

Continuous hinge. Black PVC profiles fused together with a flexible membrane.

	A	B	C	D	E	F	G	H
2231/020	**2m Lengths**				**Weight 1kg/2.2lb**			
2231/025	**2.5m Lengths**				**Weight 1.25kg/2.76lb**			
2231/030	**3m Lengths**				**Weight 1.5kg/3.3lb**			
METRIC (mm)	*28*	*23*	*16*	*4*				
IMPERIAL (ins)	*1.10*	*0.91*	*0.63*	*0.16*				
165° opening, 28 mm face								
2232/030	**Self adhesive side moulding**							
28mm x 10m length								

SELF-ADHESIVE, SIDE-MOULDING.

A self-adhesive, side moulding made from black P.V.C. extrusion which has been specifically designed to continue the low hinge profile along the full length of the application, thus, enhancing the vehicle's appearance.

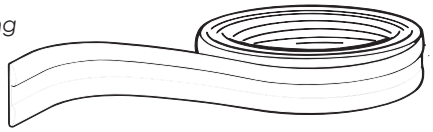

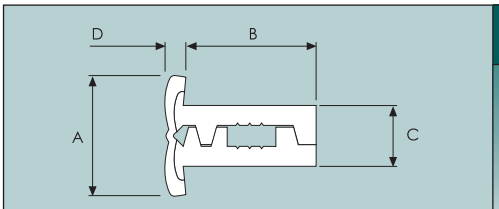

'CENTAFLEX'

Continuous hinge. Black PVC profiles fused together with a flexible membrane.

	A	B	C	D	E	F	G	H
2231/120	**2m Lengths**				**Weight 1.6kg/3.5lb**			
2231/125	**2.5m Lengths**				**Weight 2kg/4.4lb**			
2231/130	**3m Lengths**				**Weight 2.4kg/5.3lb**			
METRIC (mm)	*30*	*34*	*16*	*4.5*				
IMPERIAL (ins)	*1.18*	*1.34*	*0.63*	*0.18*				
180° opening, 30 mm face								

* 23 mm HINGE *		* 34 mm HINGE *	
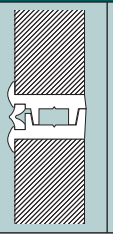	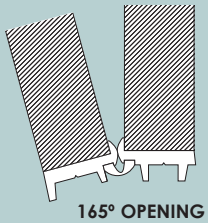	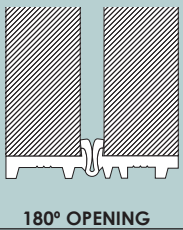	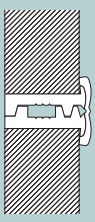
	165° OPENING		180° OPENING

Centaflex hinges are designed for HORIZONTAL, maintenance-free use, so the use of lubricants/grease is not necessary, in fact, they can be detrimental to the hinge membrane.

Painting of the PVC blades is possible, but care must be taken, as contact between any solvents and the membrane can seriously impair the hinge's performance.

If you require any additional information regarding applications, properties, etc., please contact us for details.

Plastic Hinges

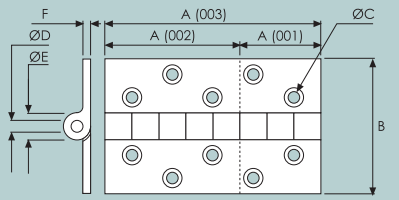

PLASTIC HINGE

Reinforced nylon, brass pin.
240° opening

	A	B	C	D	E	F	G	H
1349/001 Black 1349/011 White					**Weight 30g/1.1oz**			
METRIC (mm)	*38*	*67*	*5*	*6*	*13*	*5*		
IMPERIAL (ins)	*1.5*	*2.64*	*0.2*	*0.24*	*0.51*	*0.2*		
1349/002 Black 1349/012 White					**Weight 40g/1.4oz**			
METRIC (mm)	*63*	*67*	*5*	*6*	*13*	*5*		
IMPERIAL (ins)	*2.5*	*2.64*	*0.2*	*0.24*	*0.51*	*0.2*		
1349/003 Black 1349/013 White					**Weight 70g/2.5oz**			
METRIC (mm)	*102*	*67*	*5*	*6*	*13*	*5*		
IMPERIAL (ins)	*4*	*2.64*	*0.2*	*0.24*	*0.51*	*0.2*		

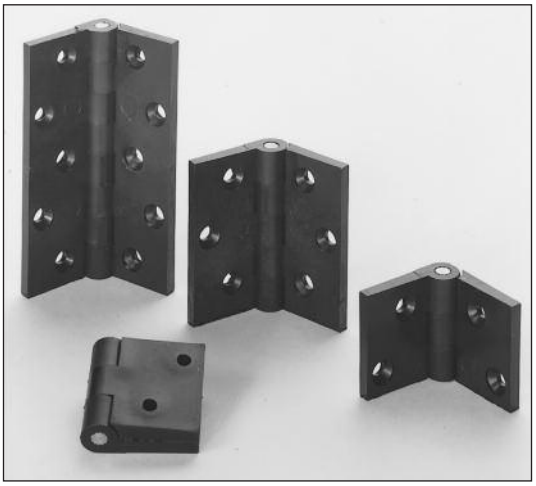

Left-1349/003 Centre - 1349/002
Bottom & Right - 1349/001

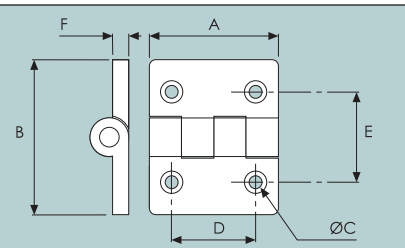

PLASTIC HINGE

Black plastic with a knurled brass pin.

	A	B	C	D	E	F	G	H
1349/004					**Weight 21g/0.7oz**			
METRIC (mm)	*40*	*48*	*4.2*	*26*	*27.5*	*5*		
IMPERIAL (ins)	*1.58*	*1.89*	*0.17*	*1.02*	*1.08*	*0.20*		

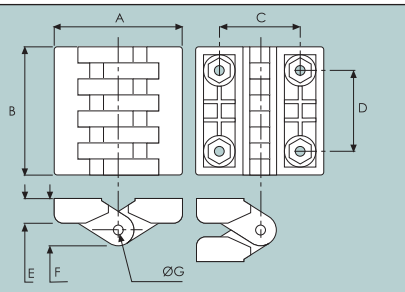

CABINET HINGES

Black, glass reinforced, polyamide body with a stainless steel pin.
Brass inserts where applicable.

	A	B	C	D	E	F	G	H
1346/001	**Ø4.2 mm thru. fixing.**				**Weight 10g/0.4 oz**			
METRIC (mm)	*38.5*	*39.5*	*25.4*	*25.4*	*9*	*14.5*	*3.0*	
IMPERIAL (ins)	*1.52*	*1.56*	*1.00*	*1.00*	*0.35*	*0.57*	*0.12*	
1346/003 1346/004	**Ø5.5 mm thru. fixing. M5 insert fixing.**				**Weight 30g/1.1 oz Weight 40g/1.4 oz**			
METRIC (mm)	*48*	*49*	*31*	*30.2*	*11*	*19*	*4*	
IMPERIAL (ins)	*1.89*	*1.93*	*1.22*	*1.19*	*0.43*	*0.75*	*0.16*	
1346/006 1346/007	**Ø6.5 mm thru. fixing. M6 insert fixing.**				**Weight 60g/2.1 oz Weight 90g/3.2 oz**			
METRIC (mm)	*64*	*65*	*40*	*40*	*13.5*	*23.2*	*5*	
IMPERIAL (ins)	*2.52*	*2.56*	*1.58*	*1.58*	*0.35*	*0.90*	*0.20*	

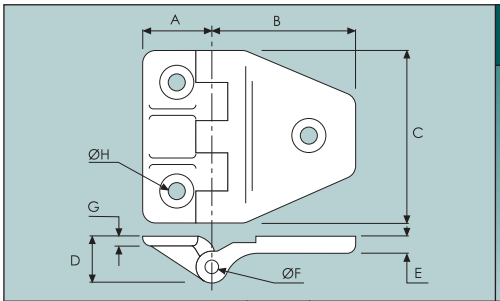

REINFORCED PLASTIC HINGE

Black plastic with zinc plated pin.
Supplied with grommet & spacer to fit 5mm (0.2") glass. (see also page e21).

	A	B	C	D	E	F	G	H
1350/002					**Weight 90g/3.2oz**			
METRIC (mm)	*32*	*68*	*80*	*20*	*11*	*8*	*8*	*9*
IMPERIAL (ins)	*1.26*	*2.68*	*3.15*	*0.79*	*0.43*	*0.32*	*0.32*	*0.35*

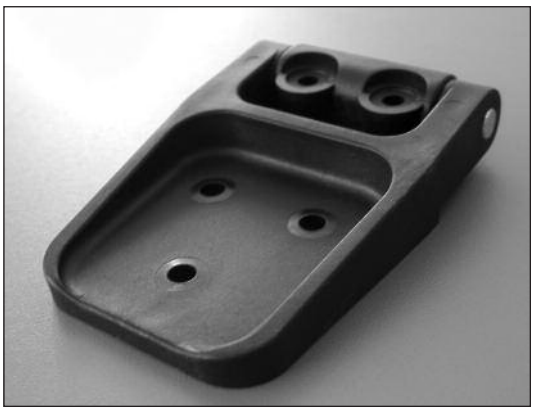

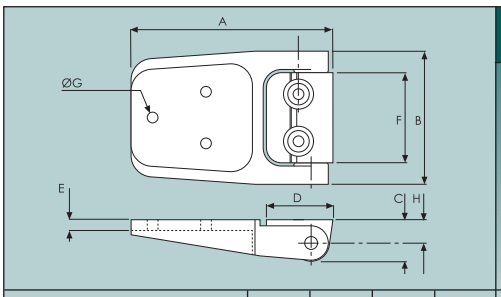

CABINET HINGE

Black polyamide with a zinc plated pin.
180° opening.

	A	B	C	D	E	F	G	H
1347/9463					**Weight 80g/2.8oz**			
METRIC (mm)	*94.0*	*63.2*	*19.0*	*31.0*	*5.0*	*42.0*	*5.3*	*10.5*
IMPERIAL (ins)	*3.70*	*2.49*	*0.75*	*1.22*	*0.20*	*1.65*	*0.21*	*0.41*

Lift-off Hinges

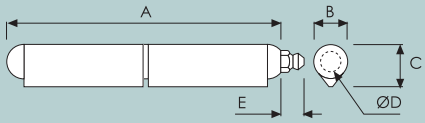

WELD ON LIFT - OFF HINGES

All sizes are supplied with a standard bearing washer

	A	B	C	D	E	F	G	H
2217/001	**Carbon steel**				**Weight 20g/0.7oz**			
METRIC (mm)	*40*	*8*	*9.7*	*5*				
IMPERIAL (ins)	*1.58*	*0.32*	*0.38*	*0.2*				
2217/002	**Carbon steel**							
METRIC (mm)	*50*	*8*	*9.7*	*5*				
IMPERIAL (ins)	*1.97*	*0.32*	*0.38*	*0.20*				
2217/003	**Carbon steel**				**Weight 40g/1.4oz**			
METRIC (mm)	*60*	*10*	*12*	*6*				
IMPERIAL (ins)	*2.36*	*0.4*	*0.47*	*0.24*				
2217/0031	**Carbon steel**							
METRIC (mm)	*70*	*11*	*13*	*7*				
IMPERIAL (ins)	*2.76*	*0.43*	*0.51*	*0.26*				
2217/004	**Carbon steel**				**Weight 80g/2.8oz**			
2219/004	**Carbon steel***							
METRIC (mm)	*80*	*13*	*15.5*	*8*	*10*			
IMPERIAL (ins)	*3.15*	*0.51*	*0.61*	*0.32*	*0.39*			
2217/005	**Carbon steel**				**Weight 170g/6oz**			
2219/005	**Carbon steel***							
METRIC (mm)	*100*	*16*	*20*	*10*	*10*			
IMPERIAL (ins)	*3.94*	*0.63*	*0.79*	*0.39*	*0.39*			
2217/008	**Carbon steel**				**Weight 270g/9.5oz**			
METRIC (mm)	*135*	*18*	*22*	*12*				
IMPERIAL (ins)	*5.32*	*0.71*	*0.87*	*0.47*				
2217/010	**Carbon steel**				**Weight 470g/1lb**			
METRIC (mm)	*180*	*20*	*25.4*	*14*				
IMPERIAL (ins)	*7.10*	*0.8*	*1*	*0.55*				
2217/024	**Stainless steel**				**Weight 80g/2.8oz**			
METRIC (mm)	*80*	*13*	*15.5*	*8*				
IMPERIAL (ins)	*3.15*	*0.51*	*0.61*	*0.32*				
2217/025	**Stainless steel**				**Weight 170g/6oz**			
METRIC (mm)	*100*	*16*	*20*	*10*				
IMPERIAL (ins)	*3.94*	*0.63*	*0.8*	*0.4*				
2217/006	**Carbon steel**				**Weight 200g/7.1oz**			
2217/026	**Stainless steel**							
2219/0160	**Carbon steel* (ss pin)**							
METRIC (mm)	*120*	*16*	*20*	*11*	*10*			
IMPERIAL (ins)	*4.72*	*0.63*	*0.79*	*0.43*	*0.39*			
2219/007	**Carbon steel***							
METRIC (mm)	*150*	*20*	*25*	*13*	*10*			
IMPERIAL (ins)	*5.91*	*0.79*	*0.98*	*0.51*	*0.39*			
2217/028	**Stainless steel**							
METRIC (mm)	*180*	*20*	*25.4*	*14*	*10*			
IMPERIAL (ins)	*7.09*	*0.79*	*1.00*	*0.55*	*0.39*			

* Complete with a grease nipple.

Continued overleaf . . .

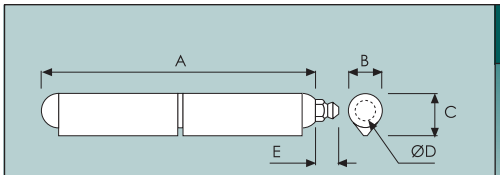

WELD ON LIFT - OFF HINGES

All sizes are supplied with a standard bearing washer

	A	B	C	D	E	F	G	H
2217/011	**Carbon steel**				**Weight 680g/1.5lb**			
2219/009	**Carbon steel***							
METRIC (mm)	*200*	*23*	*28*	*16*	*10*			
IMPERIAL (ins)	*7.87*	*0.91*	*1.10*	*0.63*	*0.39*			
2219/006	**Carbon steel***				**Weight 190g/6.7oz**			
METRIC (mm)	*120*	*16*	*20*	*11*	*10*			
IMPERIAL (ins)	*4.12*	*0.63*	*0.8*	*0.43*	*0.4*			
2219/008	**Carbon steel***				**Weight 270g/9.5oz**			
METRIC (mm)	*135*	*18*	*22*	*12*	*10*			
IMPERIAL (ins)	*5.32*	*0.71*	*0.87*	*0.47*	*0.4*			
2219/010	**Carbon steel***				**Weight 470g/1lb**			
METRIC (mm)	*180*	*20*	*25.4*	*14*	*10*			
IMPERIAL (ins)	*7.10*	*0.8*	*1*	*0.55*	*0.4*			

* Complete with a grease nipple.

Recommended welding position.

FOR USE WITH 2217 & 2219 LIFT-OFF HINGES

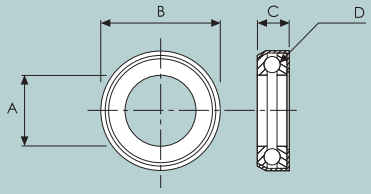

BALL RACE BEARING WASHERS

A range of optional ball race washers to give smoother operation & improve performance. For use with the lift-off hinges.

	A	B	C	D	E	F	G	H
2220/002								
METRIC (mm)	*10.4*	*17.5*	*6*	*2.5*				
2220/003								
METRIC (mm)	*11.3*	*20*	*7*	*2.5*				
2220/004								
METRIC (mm)	*12.3*	*22*	*8*	*3.2*				
2220/005								
METRIC (mm)	*13.3*	*22*	*8*	*3.2*				
2220/006								
METRIC (mm)	*14.4*	*25*	*8.5*	*3.2*				
2220/007								
METRIC (mm)	*16.4*	*27*	*9*	*3.2*				

Lift-off Hinges

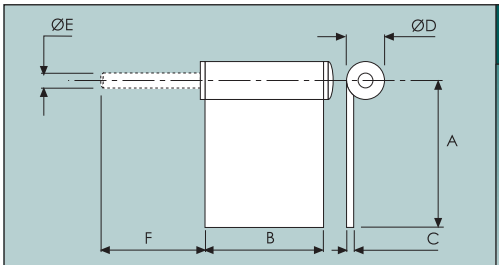

LIFT- OFF HINGES

Self colour steel
(Can be assembled in a variety of configurations to suit application).
Left hand shown.

	A	B	C	D	E	F	G	H
2211/001 Male, left hand **2211/002 Male, right hand**					**Weight 150g/5.3oz**			
METRIC (mm)	*62*	*51*	*3*	*16*	*6*	*43*		
IMPERIAL (ins)	*2.44*	*2*	*0.12*	*0.63*	*0.24*	*1.7*		
Fitted with Nylon bush								
2211/003 Female, left hand **2211/004 Female, right hand**					**Weight 130g/4.6oz**			
METRIC (mm)	*62*	*51*	*3*	*16*	*6*			
IMPERIAL (ins)	*2.44*	*2*	*0.12*	*0.63*	*0.24*			
Fitted with Nylon bush								
2214/001 Male, left hand **2214/002 Male, right hand**					**Weight 100g/3.5oz**			
METRIC (mm)	*46*	*38*	*3*	*14*	*8*	*38*		
IMPERIAL (ins)	*1.81*	*1.5*	*0.12*	*0.55*	*0.32*	*1.5*		
2214/003 Female, Universal					**Weight 70g/2.5oz**			
METRIC (mm)	*46*	*38*	*3*	*14*	*8.5*			
IMPERIAL (ins)	*1.81*	*1.5*	*0.12*	*0.55*	*0.34*			

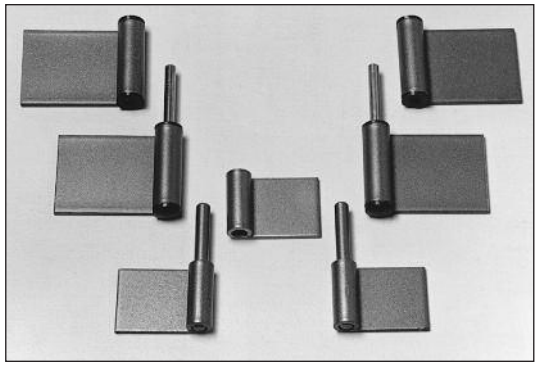

Top left: 2211/004 *Top right: 2211/003*

Centre left: 2211/001 *Centre right: 2211/002*
Bottom left: 2214/001 *Bottom right: 2214/002*

Centre: 2214/003

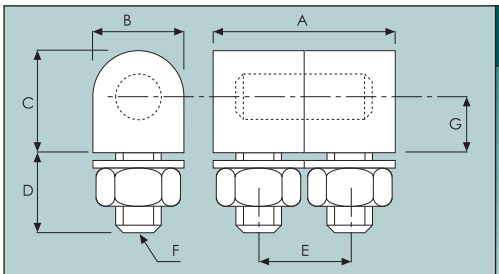

DOUBLE KNUCKLE PIVOT HINGE

Zinc plated steel.
Kit consists of 2 studs, 2 nuts, 2 serrated washers & 1 hinge pin.

	A	B	C	D	E	F	G	H
0486/3858					**Weight 100g/3.5oz**			
METRIC (mm)	*33.0*	*16.0*	*18.0*	*14.0*	*17.0*	*M8*	*10.0*	
IMPERIAL (ins)	*1.30*	*0.63*	*0.71*	*0.55*	*0.67*		*0.39*	

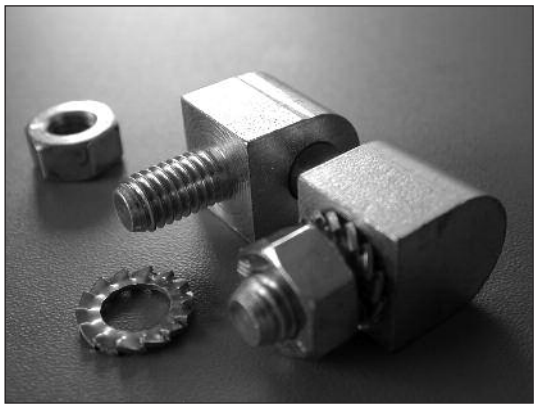

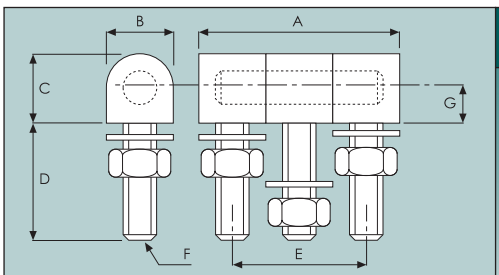

TRIPLE KNUCKLE PIVOT HINGE

Zinc plated steel.
Kit consists of 3 studs, 3 nuts, 3 serrated washers & 1 hinge pin.

	A	B	C	D	E	F	G	H
0486/3856					**Weight 70g/2.5oz**			
METRIC (mm)	*36.0*	*12.0*	*12.0*	*21.0*	*24.0*	*M6*	*6.00*	
IMPERIAL (ins)	*1.42*	*0.47*	*0.47*	*0.83*	*0.95*		*0.24*	

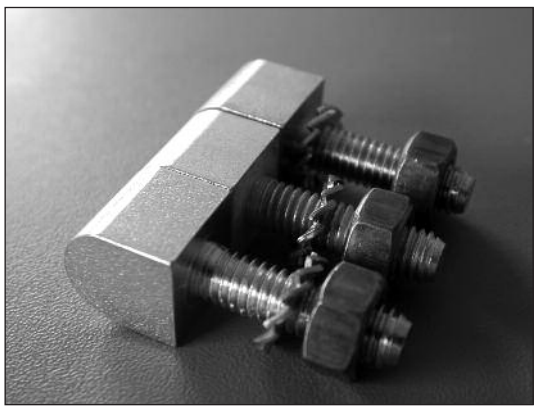

Lift-off Hinges

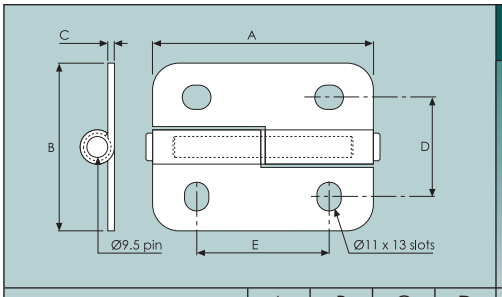

LIFT-OFF HINGE

Polished 304 stainless steel.
270° opening

		A	B	C	D	E	F	G	H
2214/505	**Right hand**					**Weight 270g/9.5oz**			
2214/5051	**Left hand (shown)**					**Weight 270g/9.5oz**			
METRIC	*(mm)*	*100*	*76.0*	*3.0*	*45.0*	*60.0*			
IMPERIAL	*(ins)*	*3.94*	*2.99*	*0.12*	*1.77*	*2.36*			

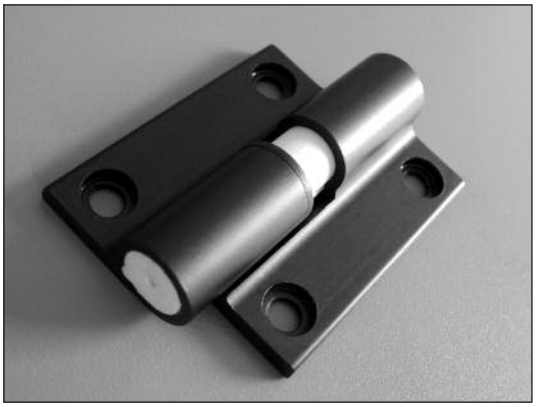

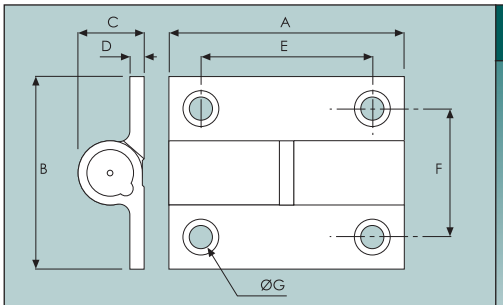

LIFT-OFF HINGE

Black, anodised aluminium with nylon bush & washers.
Spring loaded to position shown.
Left hand shown.

		A	B	C	D	E	F	G	H
0486/3765	**Right hand**					**Weight 70g/2.5oz**			
0486/3766	**Left hand**								
METRIC	*(mm)*	*65.0*	*55.0*	*18.0*	*4.50*	*48.0*	*38.0*	*6.50*	
IMPERIAL	*(ins)*	*2.56*	*2.17*	*0.71*	*0.18*	*1.90*	*1.50*	*0.26*	

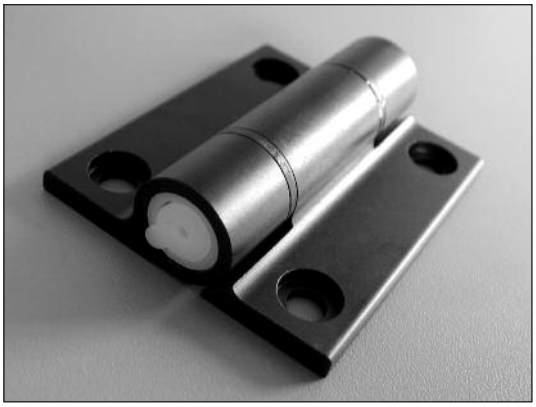

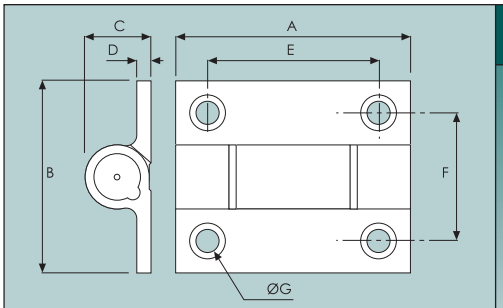

FRICTION HINGE

Black, anodised aluminium with nylon bush & washers.
Friction load is adjustable via screw in hinge pin.

		A	B	C	D	E	F	G	H
0486/4146						**Weight 80g/2.8oz**			
METRIC	*(mm)*	*65.0*	*55.0*	*18.0*	*4.50*	*48.0*	*38.0*	*6.50*	
IMPERIAL	*(ins)*	*2.56*	*2.17*	*0.71*	*0.18*	*1.89*	*1.50*	*0.26*	

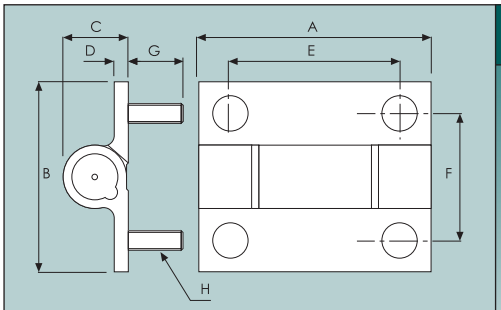

FRICTION HINGE

Black, anodised aluminium with nylon bush & washers.
Steel studs.
Friction load is adjustable via screw in hinge pin.

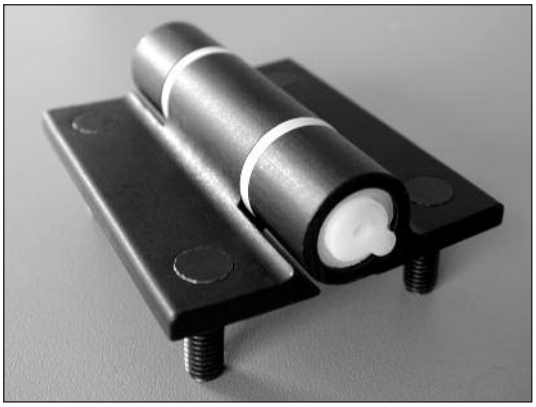

	A	B	C	D	E	F	G	H
0486/4148					**Weight 90g/3.2oz**			
METRIC (mm)	*65.0*	*55.0*	*18.0*	*4.50*	*48.0*	*38.0*	*15.0*	*M6*
IMPERIAL (ins)	*2.56*	*2.17*	*0.71*	*0.18*	*1.89*	*1.50*	*0.59*	

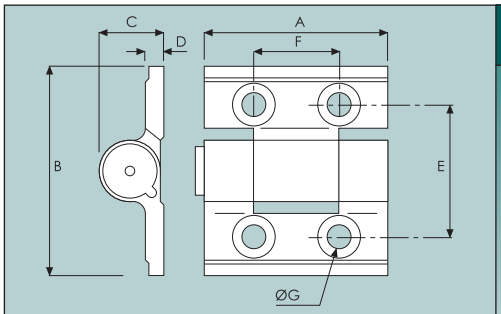

FRICTION HINGE

Black, anodised aluminium with nylon bush.
Friction load is adjustable via screw in hinge pin.

	A	B	C	D	E	F	G	H
0486/4136					**Weight 10g/0.4oz**			
METRIC (mm)	*30.0*	*35.0*	*10.0*	*3.00*	*21.0*	*15.0*	*3.00*	
IMPERIAL (ins)	*1.18*	*1.38*	*0.39*	*0.12*	*0.83*	*0.59*	*0.12*	

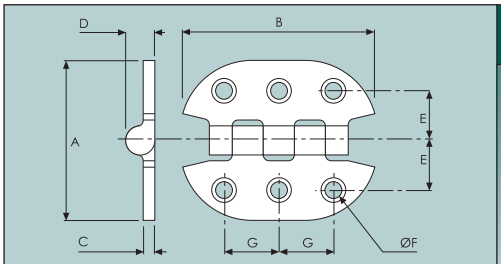

HINGE

Chrome plate on brass.

	A	B	C	D	E	F	G	H
0147/001					**Weight 50g/1.8oz**			
METRIC (mm)	*41*	*49*	*3.0*	*8.0*	*12.5*	*4.2*	*14.5*	
IMPERIAL (ins)	*1.61*	*1.93*	*0.12*	*0.32*	*0.49*	*0.17*	*0.57*	

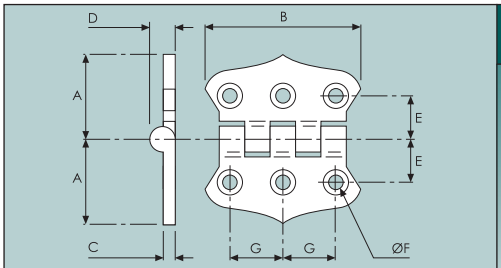

HINGE

Chrome plate on brass.

	A	B	C	D	E	F	G	H
0148/001					**Weight 150g/5.3oz**			
METRIC (mm)	*35.5*	*68*	*4.5*	*11*	*18*	*6*	*23*	
IMPERIAL (ins)	*1.40*	*2.68*	*0.18*	*0.43*	*0.71*	*0.24*	*0.91*	

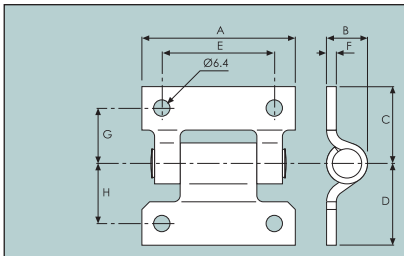

HINGE

316 stainless steel.
High polish finish.
Designed specifically for 180° applications but will rotate through 270°.

	A	B	C	D	E	F	G	H
9820/63301					**Weight 145g/5.1oz**			
METRIC (mm)	*60.0*	*17.5*	*28.0*	*32.0*	*44.0*	*3.80*	*19.5*	*23.5*
IMPERIAL (ins)	*2.36*	*0.69*	*1.10*	*1.26*	*1.73*	*0.12*	*0.77*	*0.93*

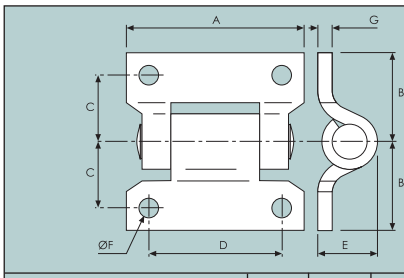

HINGE

304 stainless steel.
High polish finsih.
Designed specifically for 180° applications but will rotate through 270°.

	A	B	C	D	E	F	G	H
9810/63301					**Weight 150g/5.3oz**			
METRIC (mm)	*59.0*	*30.0*	*22.0*	*44.0*	*17.0*	*6.50*	*4.00*	
IMPERIAL (ins)	*2.32*	*1.18*	*0.87*	*1.73*	*0.67*	*0.26*	*0.16*	

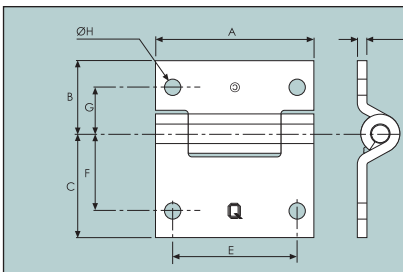

HINGE

180° Opening.
High polish finish.
Teflon coated pin.
Designed specifically for 180° applications but will rotate through 270°.

	A	B	C	D	E	F	G	H
2216/006	**Zinc plated, steel**				**Weight 210g/7.5oz**			
2216/007	**316 Stainless steel**				**Weight 210g/7.5oz**			
METRIC (mm)	*65.0*	*30.0*	*43.0*	*4.0*	*51.0*	*32.0*	*19.0*	*6.7*
IMPERIAL (ins)	*2.56*	*1.18*	*1.69*	*0.16*	*2.0*	*1.26*	*0.75*	*0.26*

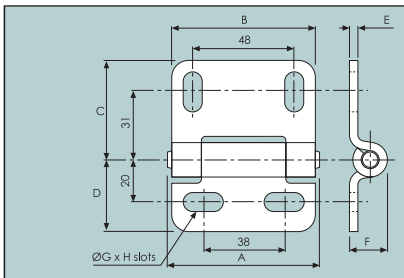

HINGE

Unpolished, 304 stainless steel.
Designed specifically for 180° applications but will rotate through 270°.

	A	B	C	D	E	F	G	H
7198/001					**Weight 210g/7.4oz**			
METRIC (mm)	*70.0*	*68.0*	*47.0*	*34.0*	*4.00*	*18.0*	*8.50*	*19.0*
IMPERIAL (ins)	*2.76*	*2.68*	*1.85*	*1.34*	*0.16*	*0.71*	*0.34*	*0.75*

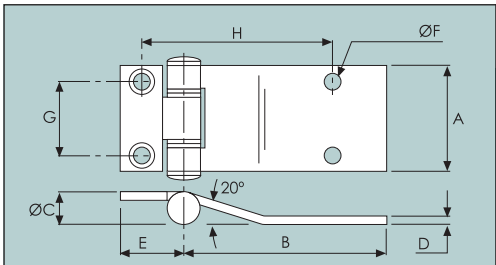

CANOPY HINGE

Pressed steel C/w nylon bush & stainless steel pin.
300° opening.
002, 003 & 006 - bracket holes are c'sunk.

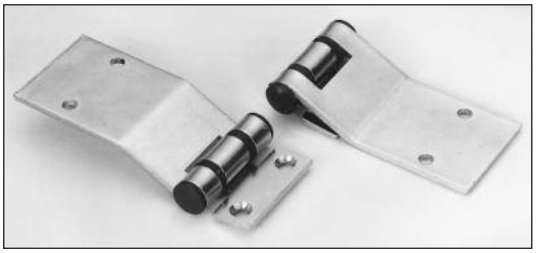

	A	B	C	D	E	F	G	H
0948/002 **Zinc plated** **Weight 200g/7.1oz**								
0948/003 **White painted**								
0948/004 **Chrome plated**								
METRIC (mm)	51	96	16	3	28	6	34	88
IMPERIAL (ins)	2	3.78	0.63	0.12	1.10	0.24	1.34	3.4
Cranked flap								
0948/006 **Zinc plated** **Weight 200g/7.1oz**								
METRIC (mm)	51	96	16	3	28	6	34	88
IMPERIAL (ins)	2	3.78	0.63	0.12	1.10	0.24	1.34	3.47
Straight flap								

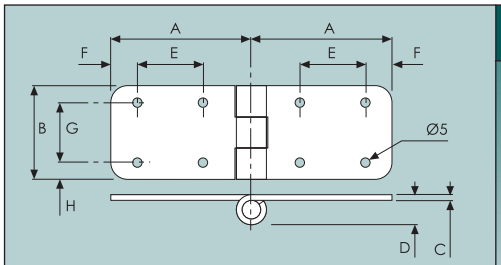

DOOR HINGE

Pressed mild steel with a zinc plated finish.

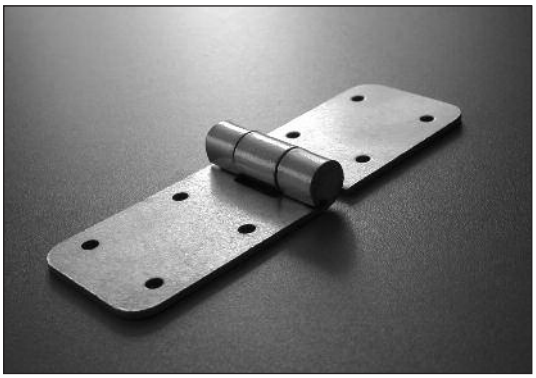

	A	B	C	D	E	F	G	H
0948/020 **Weight 223g/7.9oz**								
METRIC (mm)	75	50	3.0	16	35	14	32	9.0
IMPERIAL (ins)	2.95	1.97	0.12	0.63	1.38	0.55	1.26	0.35

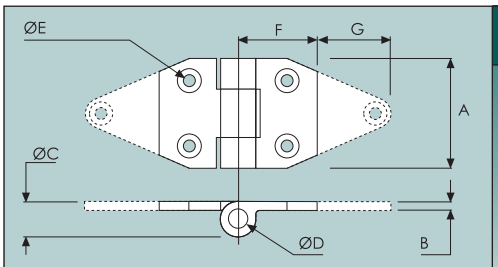

MAINTENANCE FREE HINGE

Zinc plated solid drawn steel.
260° opening.
'Metoplast' bush gives a smooth operation & requires no lubrication.

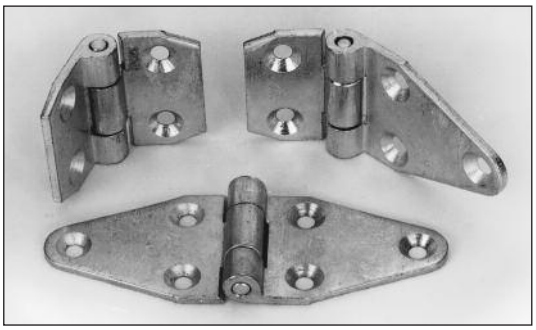

Top left - 2218/003
Top right - 2218/002
Bottom - 2218/001

	A	B	C	D	E	F	G	H
2218/001 **Long - long flaps** **Weight 170g/6oz**								
METRIC (mm)	50	3.5	13	6	6	35	35	
IMPERIAL (ins)	1.97	0.14	0.51	0.24	0.24	1.38	1.38	
2218/002 **Long - short flaps** **Weight 150g/5.3oz**								
METRIC (mm)	50	3.5	13	6	6	35	35	
IMPERIAL (ins)	1.97	0.14	0.51	0.24	0.24	1.38	1.38	
2218/003 **Short - short flaps** **Weight 130g/4.6oz**								
METRIC (mm)	50	3.5	13	6	6	35		
IMPERIAL (ins)	1.97	0.14	0.51	0.24	0.24	1.38		

Left - 2216/005 *Right - 2216/004*

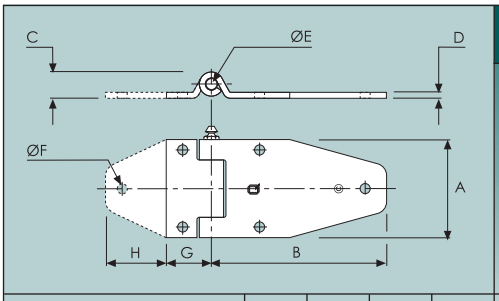

HINGE

Pressed steel, c/w grease nipple. Designed specifically for 180° applications but will rotate through 270°.

	A	B	C	D	E	F	G	H
2216/001 **2216/004**	**Zinc plated** **316 Stainless steel**				**Weight 380g/13.4oz**			
METRIC (mm)	*65*	*116*	*16*	*4*	*8*	*6.7*	*30*	*40*
IMPERIAL (ins)	*2.56*	*4.57*	*0.63*	*0.16*	*0.32*	*0.26*	*1.18*	*1.58*
Long - medium flaps								
2216/003 **2216/005**	**Zinc plated** **316 Stainless steel**				**Weight 310g/11oz**			
METRIC (mm)	*65*	*116*	*16*	*4*	*8*	*6.7*	*30*	
IMPERIAL (ins)	*2.56*	*4.57*	*0.63*	*0.16*	*0.32*	*0.26*	*1.18*	
Long- short flaps								
2216/101	**Long flap gasket**							
2216/102	**Medium flap gasket**							
2216/103	**Short flap gasket**							

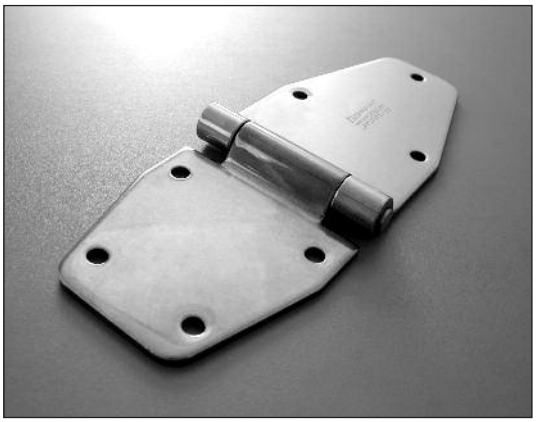

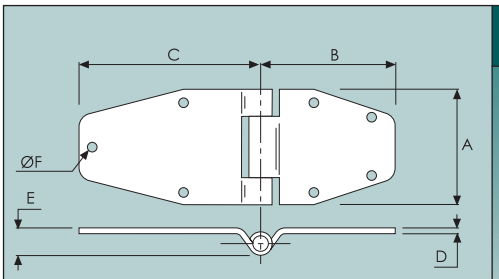

HINGE

Pressed steel. Designed specifically for 180° applications but will rotate through 270°.

	A	B	C	D	E	F	G	H
9810/6350 **9810/6360**	**304 Stainless steel** **Zinc plated**				**Weight 540g/1.2lb**			
METRIC (mm)	*80*	*92*	*122*	*4*	*17*	*7*		
IMPERIAL (ins)	*3.15*	*3.62*	*4.8*	*0.16*	*0.67*	*0.28*		

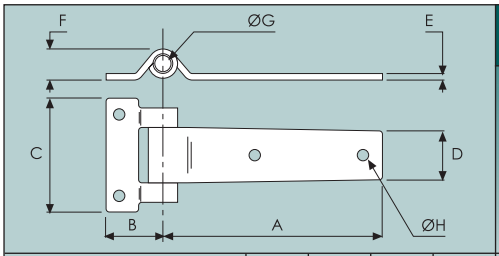

DOOR HINGE

Pressed steel,
50kg (110lb) max load.
Designed specifically
for 180° applications
but will rotate through
270°.

	A	B	C	D	E	F	G	H
9810/6330	**304 Stainless steel**				**Weight 200g/7.1oz**			
9810/6340	**Zinc plated**							
METRIC (mm)	*105*	*30*	*60*	*27*	*4*	*17*	*8*	*6.5*
IMPERIAL (ins)	*4.13*	*1.18*	*2.36*	*1.06*	*0.16*	*0.67*	*0.32*	*0.26*

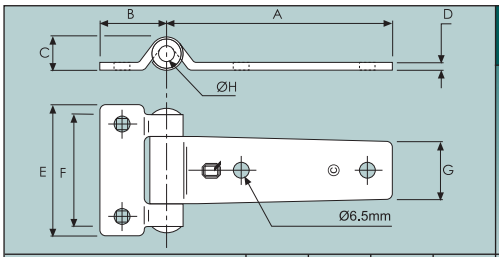

DOOR HINGE

Pressed steel.
Designed specifically
for 180° applications
but will rotate through
270°.

	A	B	C	D	E	F	G	H
9820/1061	**316 Stainless steel**				**Weight 210g/7.4oz**			
9820/1062	**Zinc plated**				**Weight 200g/7.1oz**			
METRIC (mm)	*106*	*31*	*17*	*4*	*60*	*55*	*25*	*8*
IMPERIAL (ins)	*4.17*	*1.22*	*0.67*	*0.16*	*2.36*	*2.17*	*0.98*	*0.32*

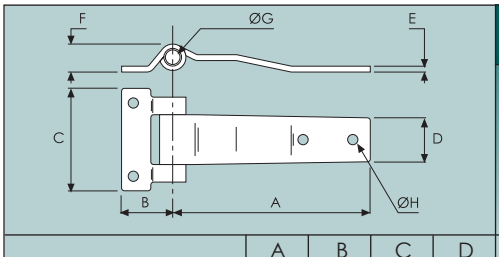

DOOR HINGE

Pressed steel.
35kg (77lb) max load.
Designed specifically
for 180° applications
but will rotate through
270°.

	A	B	C	D	E	F	G	H
9810/6310	**304 Stainless steel**				**Weight 210g/7.4oz**			
9810/6320	**Zinc plated**							
METRIC (mm)	*115*	*30*	*60*	*27*	*4*	*17*	*8*	*6.5*
IMPERIAL (ins)	*4.53*	*1.18*	*2.36*	*1.06*	*0.16*	*0.67*	*0.32*	*0.26*

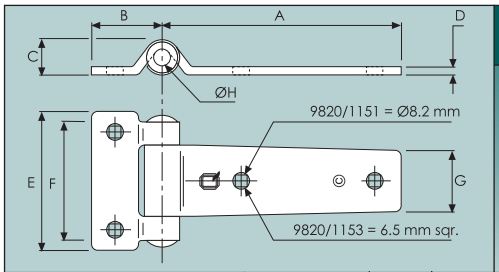

DOOR HINGE

316 Stainless steel.
High polish finish.
Designed specifically
for 180° applications
but will rotate through
270°.

	A	B	C	D	E	F	G	H
9820/1153	**Square Holes**				**Weight 240g/8.5oz**			
9820/1151	**Round holes**							
METRIC (mm)	*116*	*35*	*17*	*4*	*68*	*58*	*30*	*8*
IMPERIAL (ins)	*4.60*	*1.38*	*0.70*	*0.16*	*2.70*	*2.28*	*1.18*	*0.32*

Top - 9820/1151 *Bottom - 9820/1153*

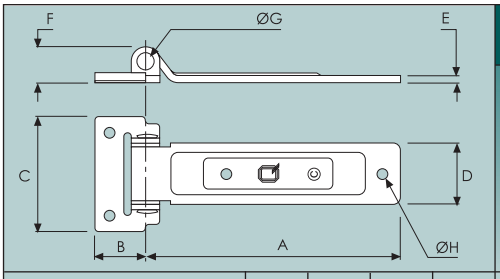

DOOR HINGE

Pressed steel with nylon bushes.
18 kg (40 lb) max. load.
Designed specifically for 180° applications but will rotate through 270°.

	A	B	C	D	E	F	G	H
9810/6170 **9810/6180**	**304 Stainless steel Zinc plated**				**Weight 150g/5.3oz**			
METRIC (mm)	*108*	*26.5*	*67.5*	*32*	*3*	*15*	*6*	*6.5*
IMPERIAL (ins)	*4.25*	*1.04*	*2.66*	*1.26*	*0.12*	*0.59*	*0.24*	*0.26*

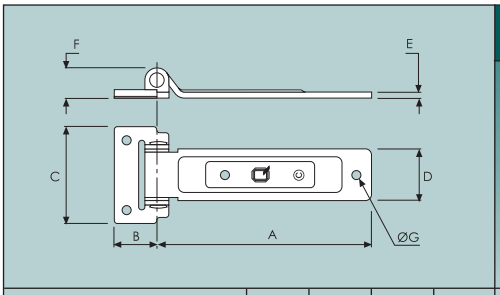

DOOR HINGE

Pressed steel with nylon bushes.
Designed specifically for 180° applications but will rotate through 270°.

	A	B	C	D	E	F	G	H
9820/6170	**316 Stainless steel**				**Weight 140g/4.9oz**			
METRIC (mm)	*108*	*26.0*	*67.5*	*35.0*	*3.0*	*15.0*	*6.5*	
IMPERIAL (ins)	*4.25*	*1.02*	*2.66*	*1.38*	*0.12*	*0.59*	*0.26*	

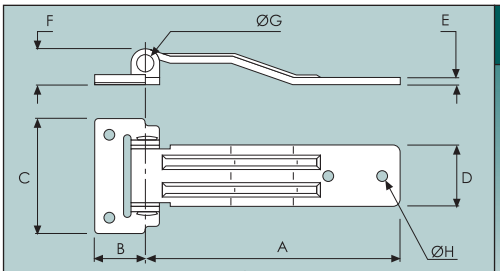

DOOR HINGE

Pressed steel with nylon bushes.
30 kg (66 lb) max. load.
Designed specifically for 180° applications but will rotate through 270°.

	A	B	C	D	E	F	G	H
9810/6150 **9810/6160**	**304 Stainless steel Zinc plated**				**Weight 160g/5.7oz**			
METRIC (mm)	*129*	*26.5*	*67.5*	*32*	*3*	*15*	*6*	*6.5*
IMPERIAL (ins)	*5.08*	*1.04*	*2.66*	*1.26*	*0.12*	*0.59*	*0.24*	*0.2*

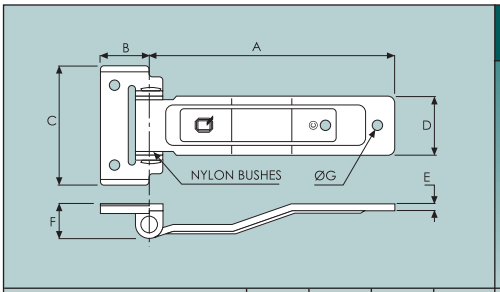

DOOR HINGE

Pressed steel with nylon bushes.
Designed specifically for 180° applications but will rotate through 270°.

	A	B	C	D	E	F	G	H
9820/6150	**316 Stainless steel**				**Weight 170g/6oz**			
METRIC (mm)	*129*	*26.0*	*67.5*	*35.0*	*3.0*	*15.0*	*6.5*	
IMPERIAL (ins)	*5.08*	*1.02*	*2.66*	*1.38*	*0.12*	*0.59*	*0.26*	

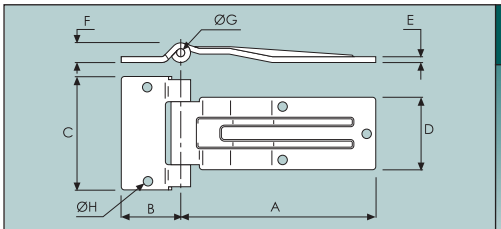

DOOR HINGE

Pressed steel.
150kg (331lb) max. load.
Designed specifically for 180° applications but will rotate through 270°.

	A	B	C	D	E	F	G	H
9810/6290	**304 Stainless steel**				**Weight 420g/14.8oz**			
9810/6300	**Zinc plated**							
METRIC (mm)	*142*	*38*	*85*	*55*	*4*	*17*	*8*	*8.5*
IMPERIAL (ins)	*5.6*	*1.5*	*3.35*	*2.17*	*0.16*	*0.67*	*0.32*	*0.34*

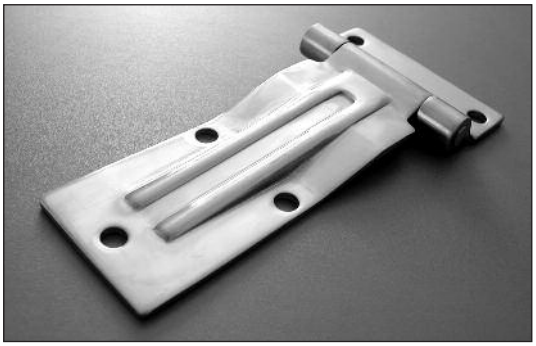

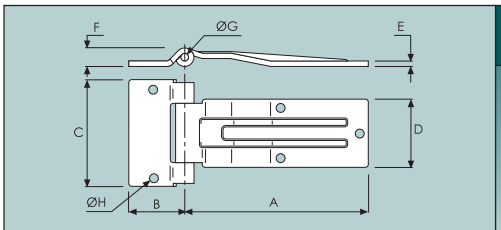

DOOR HINGE

Pressed 316 stainless steel with highly polished face.
Designed specifically for 180° applications but will rotate through 270°.

	A	B	C	D	E	F	G	H
9820/6290	**316 Stainless steel**				**Weight 420g/14.8oz**			
METRIC (mm)	*142*	*38*	*85*	*55*	*4*	*17*	*8*	*8.5*
IMPERIAL (ins)	*5.6*	*1.5*	*3.35*	*2.17*	*0.16*	*0.67*	*0.32*	*0.34*

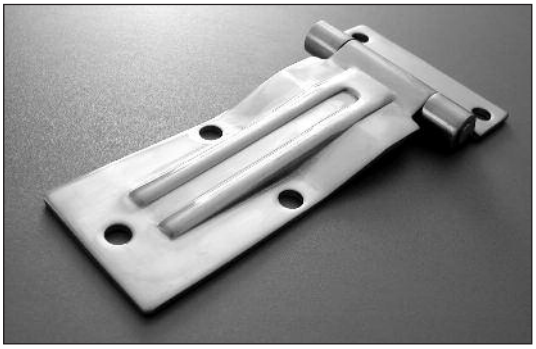

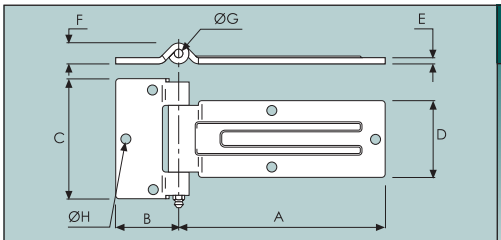

DOOR HINGE

Pressed steel, *c/w grease nipple.
170 kg (375 lb) max load.
Designed specifically for 180° applications but will rotate through 270°.

	A	B	C	D	E	F	G	H
9810/6191	**304 Stainless steel**				**Weight 830g/1.8lb**			
9810/6200	**Zinc plated***							
9810/6201	**Zinc plated**							
METRIC (mm)	*165*	*57*	*105*	*67*	*5*	*21.5*	*10*	*8.5*
IMPERIAL (ins)	*6.5*	*2.24*	*4.13*	*2.64*	*0.2*	*0.85*	*0.39*	*0.34*

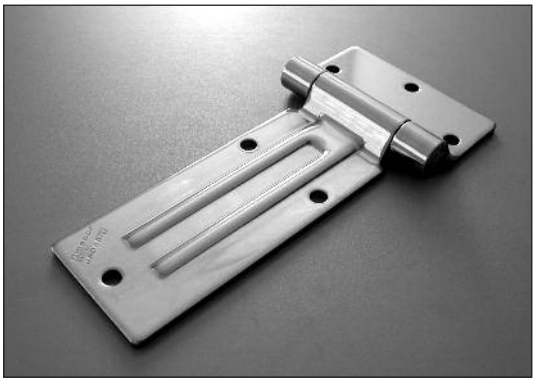

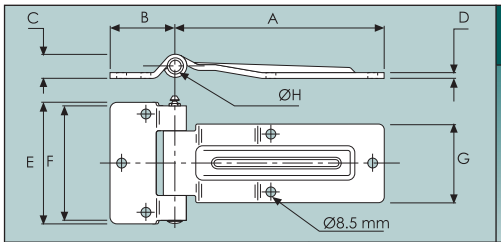

DOOR HINGE

Pressed steel, c/w grease nipple.
Designed specifically for 180° applications but will rotate through 270°.

	A	B	C	D	E	F	G	H
9820/1180	**316 Stainless steel (RH)**				**Weight 880g/1.94lb**			
9820/1181	**316 Stainless steel (LH)**				**Weight 880g/1.94lb**			
9820/1182	**Zinc plated (LH)**				**Weight 870g/1.92lb**			
9820/1183	**Zinc plated (RH)**				**Weight 870g/1.92lb**			
METRIC (mm)	*181*	*56*	*21.5*	*5*	*105*	*100*	*68*	*10*
IMPERIAL (ins)	*7.13*	*2.21*	*0.85*	*0.20*	*4.13*	*3.93*	*2.68*	*0.39*

9820/1181 left hand shown.

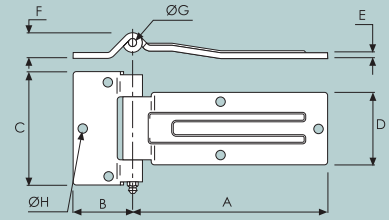

DOOR HINGE

Pressed steel, *c/w grease nipple.
180 kg (397 lb) max. load.
Designed specifically for 180° applications but will rotate through 270°.

	A	B	C	D	E	F	G	H
9810/6130	**304 Stainless steel***				**Weight 890g/1.97lb**			
9810/6140	**Zinc plated***							
9810/6141	**Zinc plated**							
METRIC (mm)	*183*	*57*	*105*	*67*	*5*	*21.5*	*10*	*8.5*
IMPERIAL (ins)	*7.21*	*2.24*	*4.13*	*2.64*	*0.2*	*0.85*	*0.39*	*0.34*

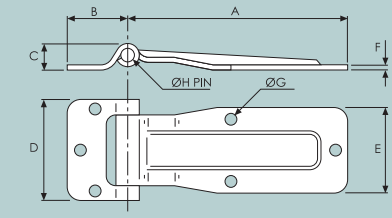

DOOR HINGE

Pressed.
Designed specifically for 180° applications but will rotate through 270°.

	A	B	C	D	E	F	G	H
2017/001	**Zinc plated**				**Weight 640g/1.4lb**			
2017/002	**304 Stainless steel**							
METRIC (mm)	*185*	*46.0*	*20.0*	*85.0*	*70.0*	*4.00*	*10.4*	*10.0*
IMPERIAL (ins)	*7.28*	*1.81*	*0.79*	*3.35*	*2.76*	*0.16*	*0.41*	*0.39*

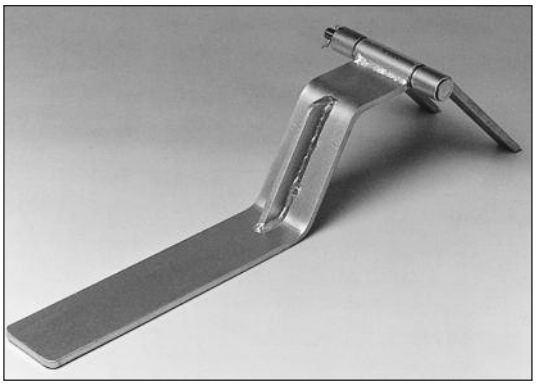

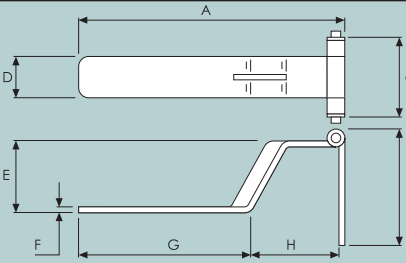

TAIL-LIFT HINGE ASSEMBLY

Zinc plated pressed steel.

	A	B	C	D	E	F	G	H
1978/002					**Weight 2.8kg/5.9lb**			
METRIC (mm)	*480*	*165*	*124*	*70.0*	*130*	*6.00*	*325*	*130*
IMPERIAL (ins)	*18.9*	*6.50*	*4.88*	*2.76*	*5.12*	*0.24*	*12.8*	*5.12*

Rear Van Door Hinges

Rear van-door hinge (270° operation)		
Complete assembly.		
9810/542	**304 Stainless steel**	**Weight 830g/1.8lb**

Assembly includes:	
9810/5460- Blade	*9810/5480- Bracket*
9810/5520- Pin with 2 lock-nuts	

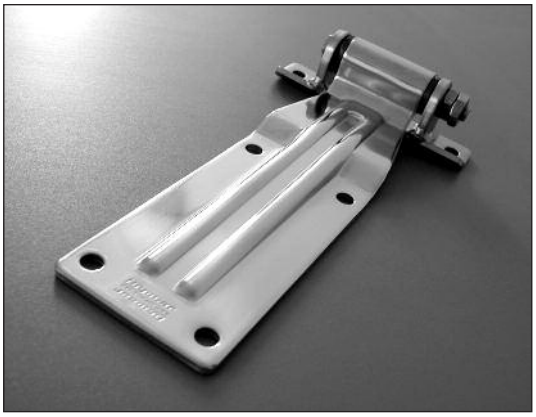

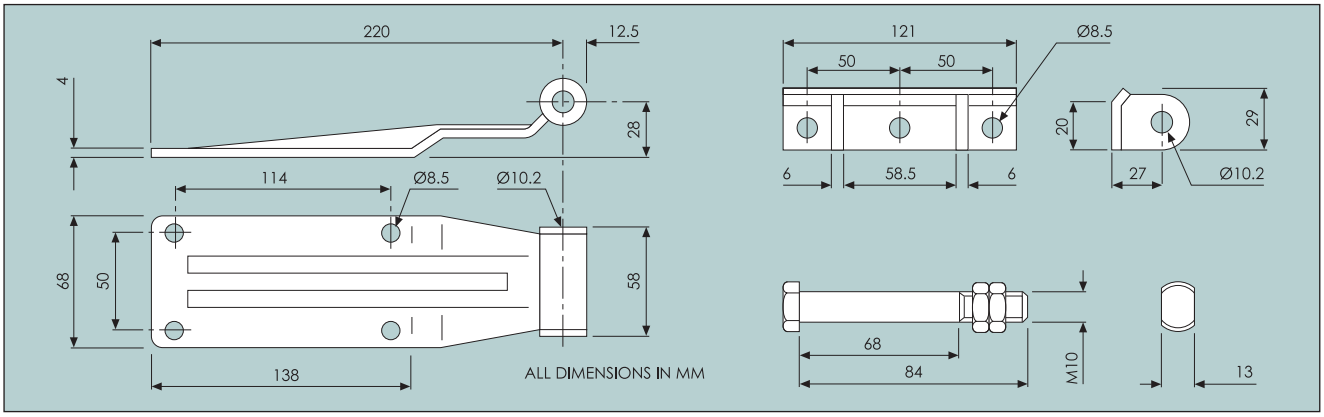

Rear van-door hinges (270° operation)		
Complete assemblies.		
9810/572	**304 Stainless steel**	**Weight 1.3kg/2.9lb**
9810/571	**Zinc-plated**	**Weight 1.3kg/2.9lb**

Stainless steel assembly includes:	
9810/57100 - Blade	*9810/57500 - Bracket*
9810/57900 - Hinge pin	*9810/57902 - Lock nut*
Zinc-plated assembly includes:	
9810/57101 - Blade	*9810/57501 - Bracket*
9810/57901 - Hinge pin	*9810/57903 - Lock nut*

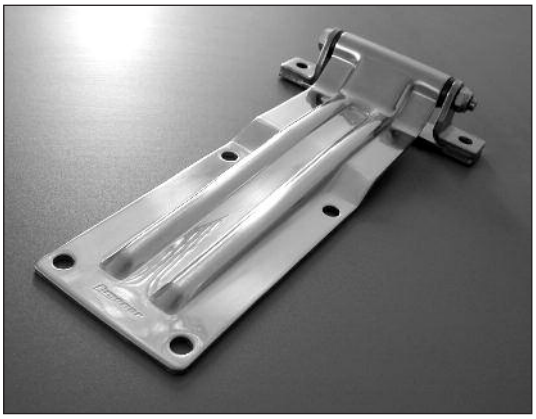

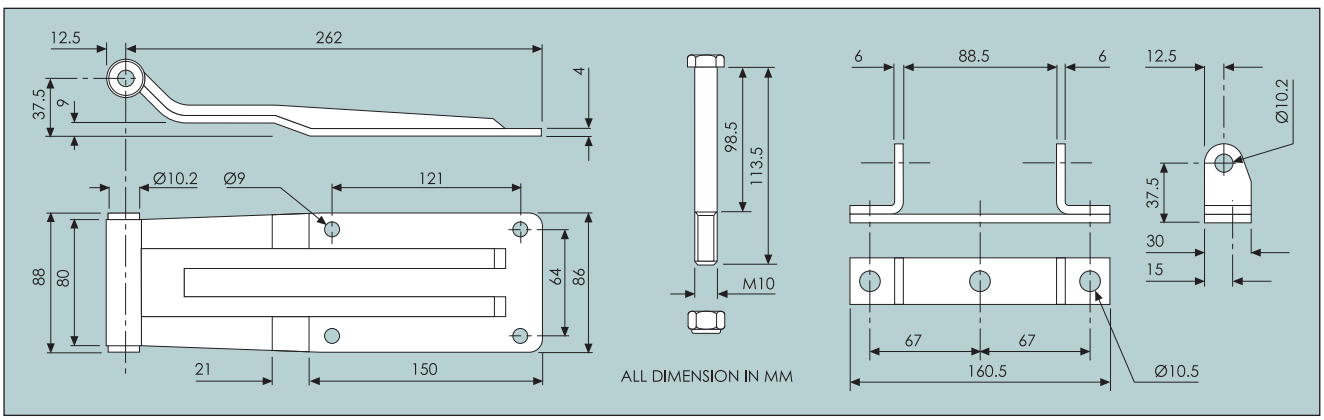

Rear Van Door Hinges

Rear van-door hinge (270° operation)		
Complete assemblies.		
9810/515	**304 Stainless steel**	**Weight 1kg/2.2lb**
9810/516	**Zinc-plated**	**Weight 1kg/2.2lb**

Stainless steel assembly includes:	
9810/5340 - Blade	*9810/5380 - Bracket*
9810/5520 - Pin with 2 lock-nuts	
Zinc-plated assembly includes:	
9810/5350 - Blade	*9810/5390 - Bracket*
9810/5530 - Pin with 2 lock-nuts	

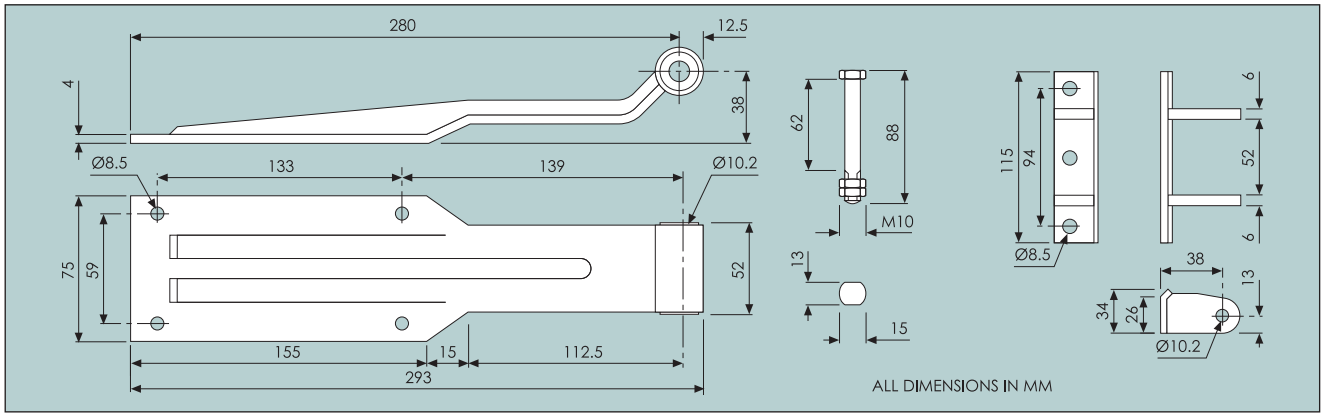

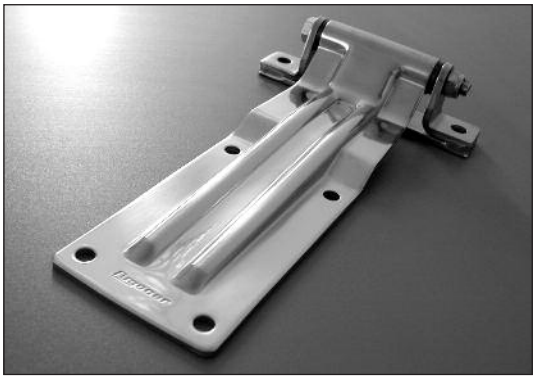

Rear van-door hinges (270° operation)		
Complete assemblies.		
9810/574	**304 Stainless steel**	**Weight 1.5kg/3.3lb**
9810/573	**Zinc-plated**	**Weight 1.5kg/3.3lb**

Stainless steel assemby includes:	
9810/57000 - Blade	*9810/57400 - Bracket*
9810/57800 - Hinge pin	*9810/57902 - Lock-nut*
Zinc-plated assembly includes:	
9810/57001 - Blade	*9810/57401 - Bracket*
9810/57801 - Hinge pin	*9810/57903 - Lock-nut*

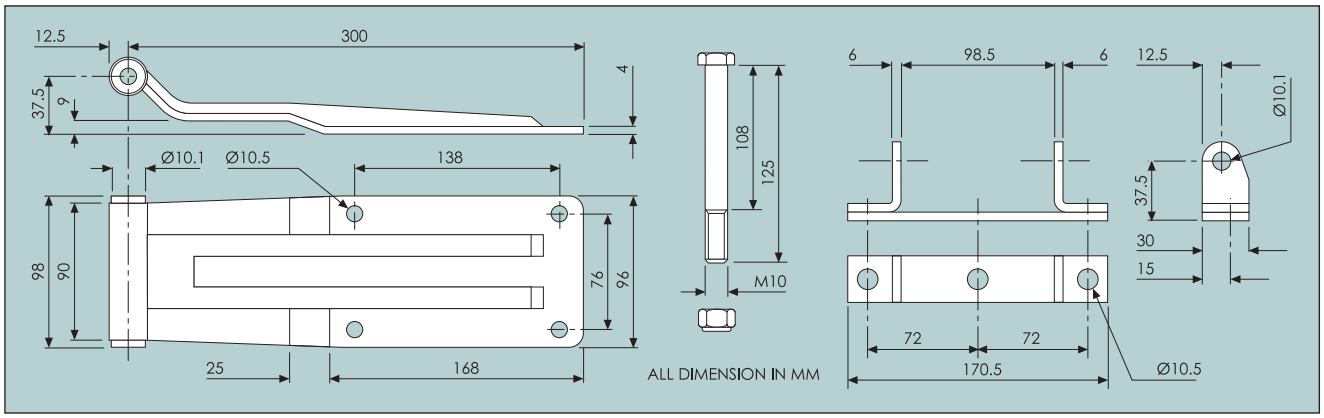

Rear Van Door Hinges

Rear van-door hinge (270° operation)		
Complete assembly.		
2052/100	**Zinc-plated steel**	**Weight 1.1kg/2.4lb**

Assembly includes:	
2052/0076 - Blade	*2052/102 - M12 hinge bolt*
0973/200 - Bracket	*2052/103 - M12 lock-nut*

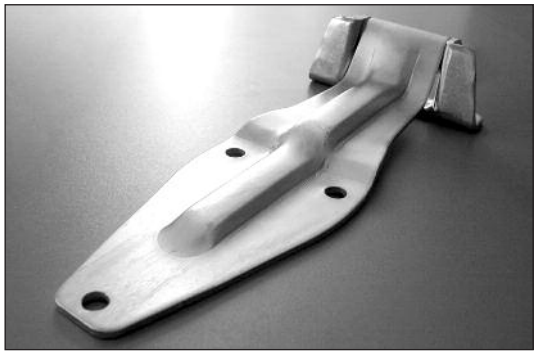

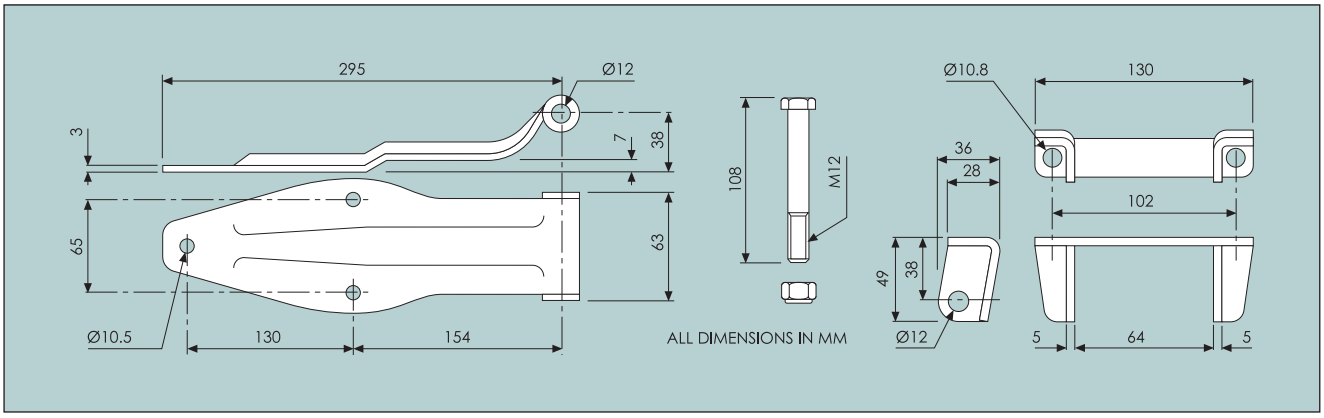

Rear van-door hinges (270° operation)		
Complete zinc-plated assemblies.		
0973/001	**With bolt-on bracket**	**Weight 3.05kg/6.7lb**
0973/0011	**With weld-on bracket**	**Weight 2.96kg/6.5lb**

Assemblies include:	
0973/002 - Forged steel blade	*0973/011 - Weld-on bracket*
0973/201 - Bolt-on bracket	*2054/007 - Hinge pin & circlip*

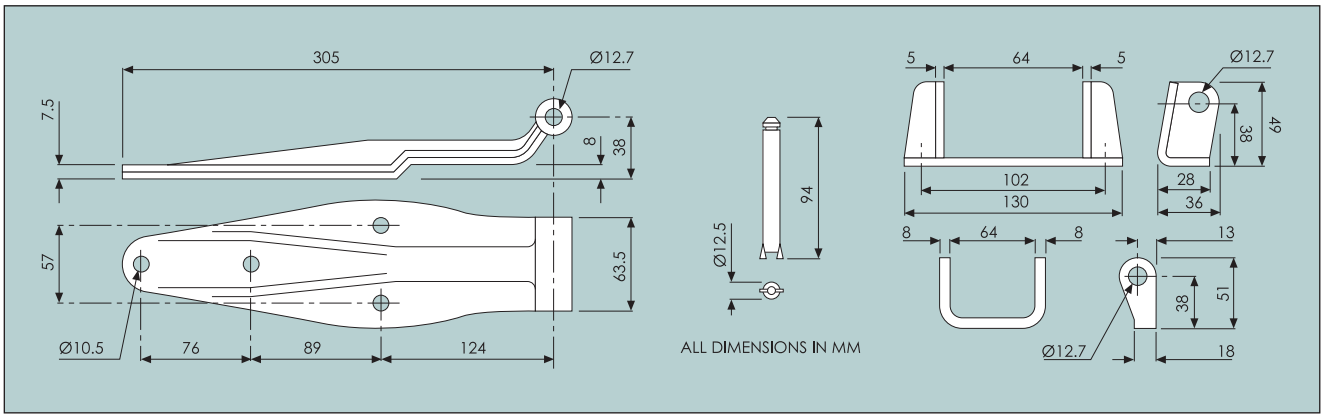

Rear Van Door Hinges

Rear van-door hinges		
	Complete, 'Pre-packed' assemblies.	
2052/300	**Zinc-plated**	**Weight 970g/2.1lb**
	Complete with bolt-on bracket.	
2052/311	**Zinc-plated**	**Weight 970g/2.1lb**
	Complete with weld-on bracket.	
2052/400	**304 Stainless steel**	**Weight 970g/2.1lb**
	Complete with bolt-on bracket.	

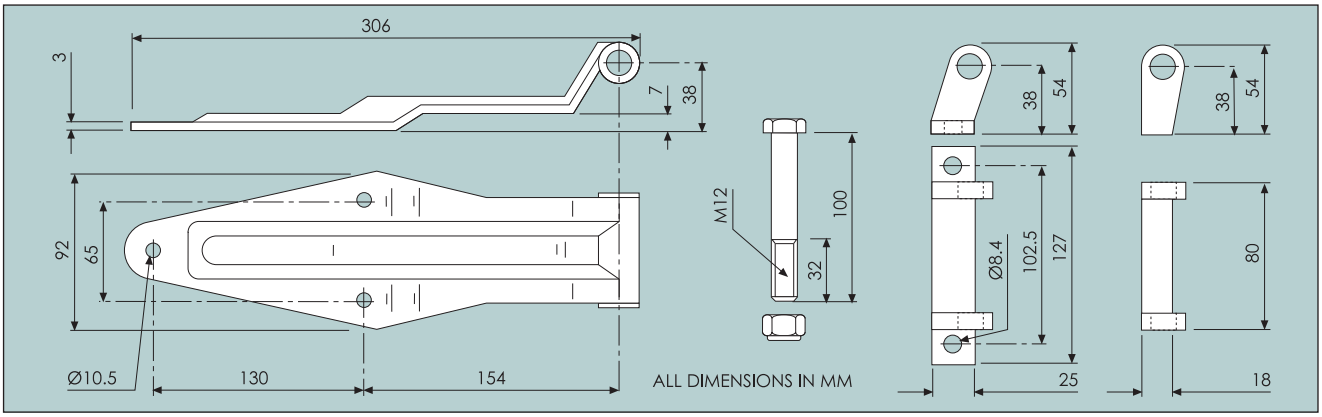

Rear van-door hinge (270° operation)		
	Complete assembly.	
2052/002	**Zinc-plated steel**	**Weight 1.1kg/2.4lb**
2052/006	**304 Stainless steel**	**Weight 1.1kg/2.4lb**

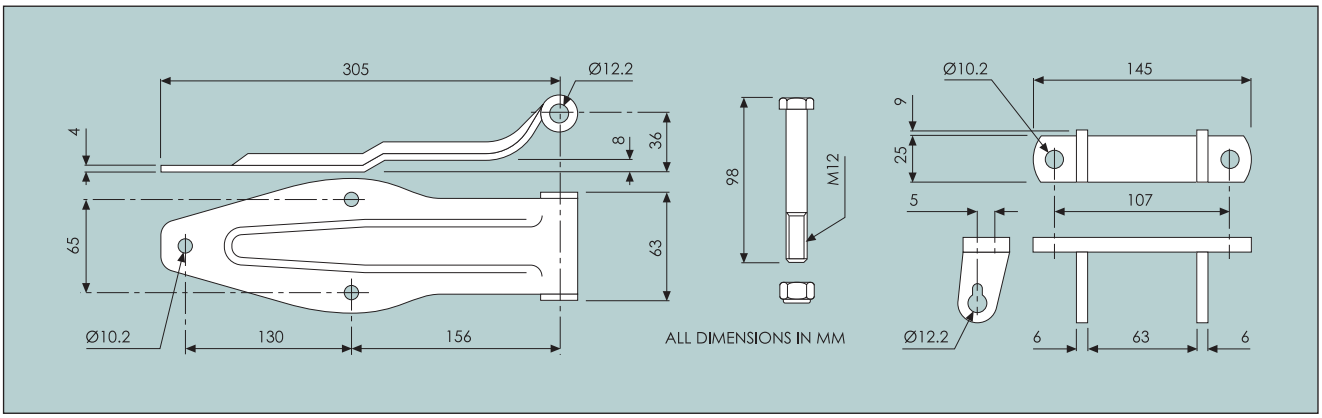

Rear Van Door Hinges

Rear van-door hinges		
	Complete, 'Pre-packed' assemblies.	
2051/300	**Zinc-plated**	**Weight 1.1kg/2.4lb**
	Complete with bolt-on bracket.	
2051/311	**Zinc-plated**	**Weight 1.1kg/2.4lb**
	Complete with weld-on bracket.	
2051/400	**Stainless steel**	**Weight 1.1kg/2.4lb**
	Complete with bolt-on bracket.	
2051/411	**Stainless steel**	**Weight 1.1kg/2.4lb**
	Complete with weld-on bracket.	

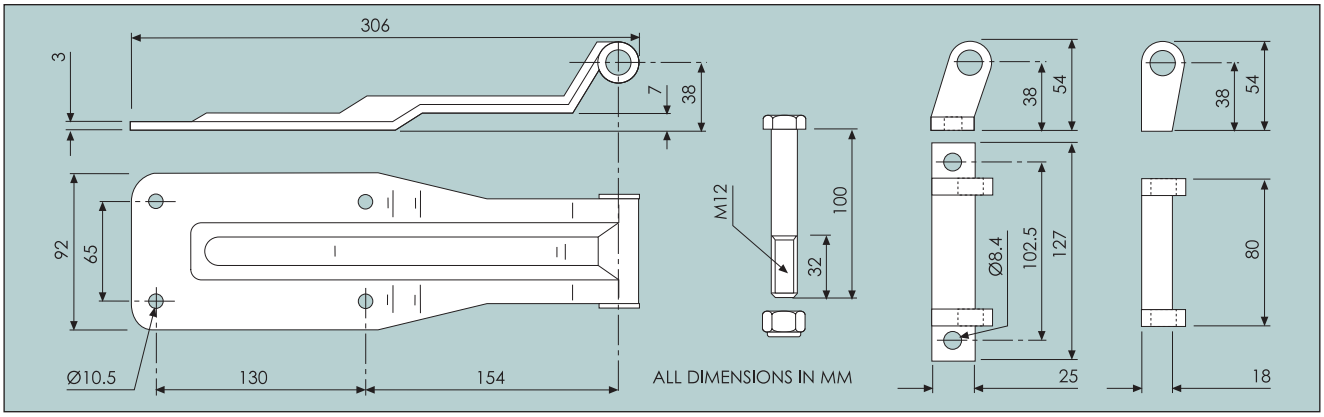

Rear van-door hinges (270° operation)		
	Complete, 'Pre-packed' assemblies.	
2057/401	**4 hole, stainless steel**	**Weight 1.5kg/3.3lb**
2057/301	**4 hole, zinc-plated**	**Weight 1.5kg/3.3lb**
	Complete with bolt-on bracket.	

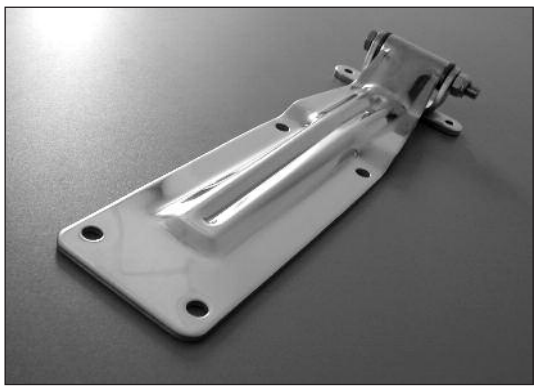

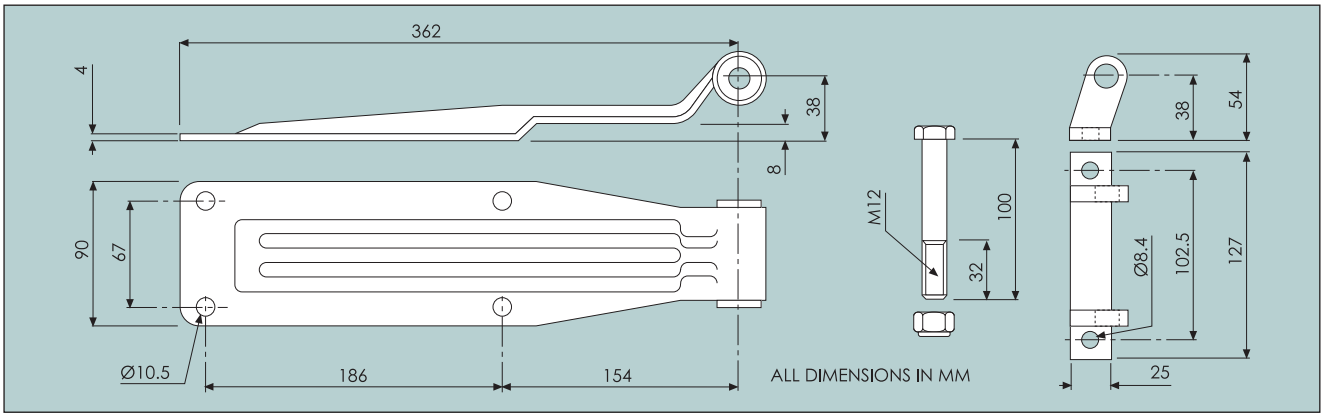

Rear Van Door Hinges

Rear van-door hinges (270° operation)		
	Complete assemblies.	
9810/512	**304 Stainless steel**	**Weight 1.7kg/3.8lb**
	Complete with angled bracket	
9810/511	**Zinc-plated**	**Weight 1.7kg/3.8lb**
	Complete with angled bracket	
9810/514	**304 Stainless steel**	**Weight 1.6kg/3.5lb**
	Complete with wide bracket	
9810/513	**Zinc-plated**	**Weight 1.6kg/3.5lb**
	Complete with narrow bracket	

Stainless steel assemblies include:	
9810/5180 - Blade	*9810/5200 - Angled bracket*
9810/5240 - Wide bracket	*9810/5520 - Pin with 2 lock-nuts*
Zinc-plated assemblies include:	
9810/5190 - Blade	*9810/5210 - Angled bracket*
9810/5270 - Narrow bracket	*9810/5530 - Pin with 2 lock-nuts*

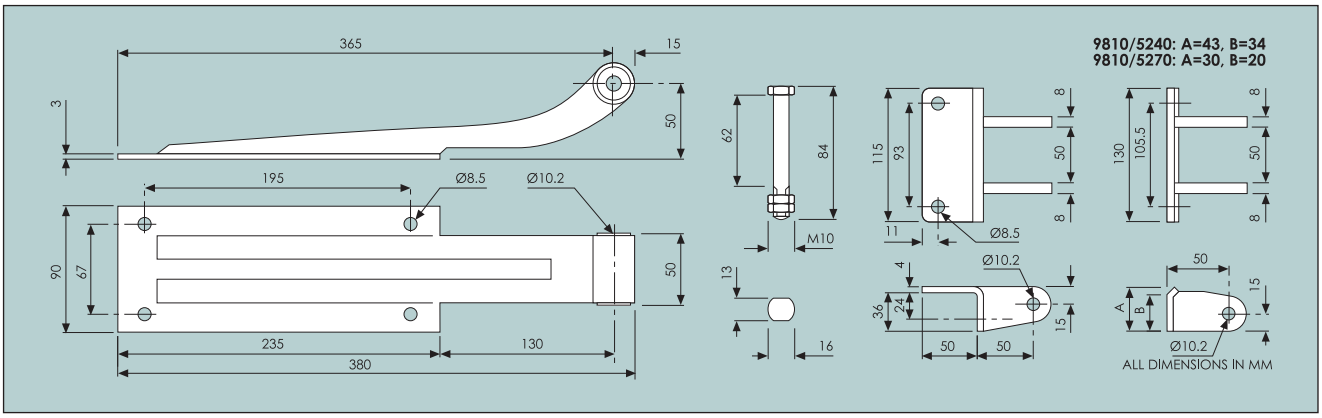

Notes

handles, locks
& latches

section

d

HANDLES, LOCKS & LATCHES

SLAM LOCKS d1-d3
STRIKERS d4
PADDLE LOCKS d5-d11
ROD LOCKS d12-d15
END SLAMS d16
SLAM BOLTS d17
BUDGET LOCKS d18-d19
TEE KEYS d20
ESCUTCHEONS d21
COMPARTMENT LOCKS d22-d25
QUARTER TURN LOCKS d25
SLIDING DOOR LOCKS d26-d27
ROTOR LATCHES d28-d29
PUSH BUTTON HANDLES d30-d31
LEVER HANDLES d31-d33
TEE HANDLES d33-d34
EMERGENCY STOP SWITCH d34
DISH HANDLES d35-d37
CAMS d38
INTERIOR HANDLES d38
THIMBLE INSERT d38
PULL HANDLES d39-d44
PANEL HANDLES d45
CHEST HANDLE d45

TRIMARK - HANDLES, LOCKS & LATCHES d46-d54

innovative latching & sealing systems

Industrilas

a reliable & resourceful partner

swing handles quarter turns hinges
seal profiles rod latch systems
compression latches paddle locks
handles toggle fasteners slam bolts

All products **ROHS-compliant** & certified according to both **ISO 9001:2008** & **EN14001:2004 by TÜV**.

Handles

Vector™

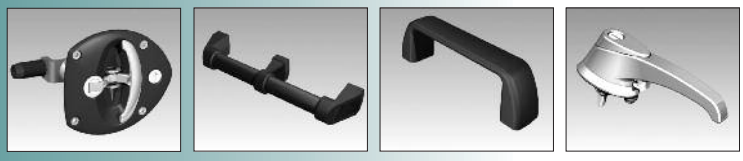

Swing Handles

Klima-flex™ VENTILATION SYSTEMS

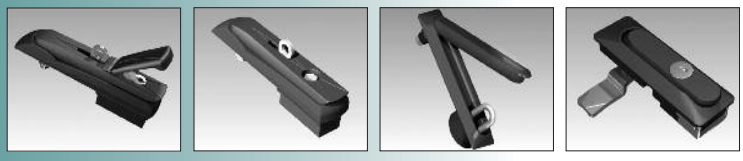

Rod Latch Systems

VISION™

Quarter Turns

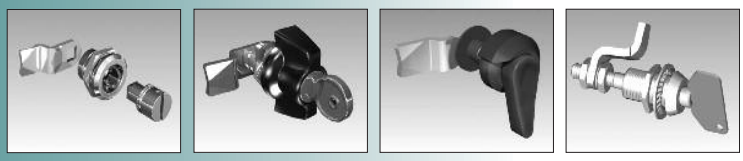

Hinges

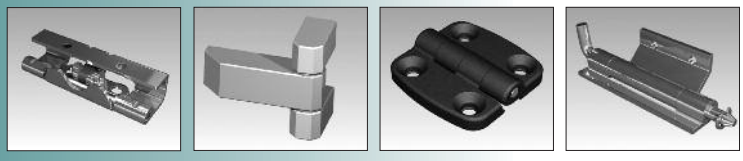

Sealing Profiles

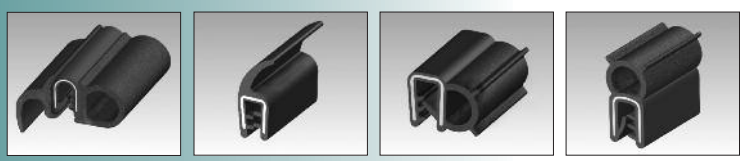

Full product catalogue available on request
2D & 3D CAD models available for download
www.albert-jagger.co.uk

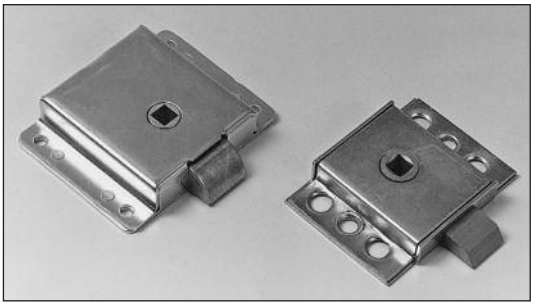

9800/2056 2073/002

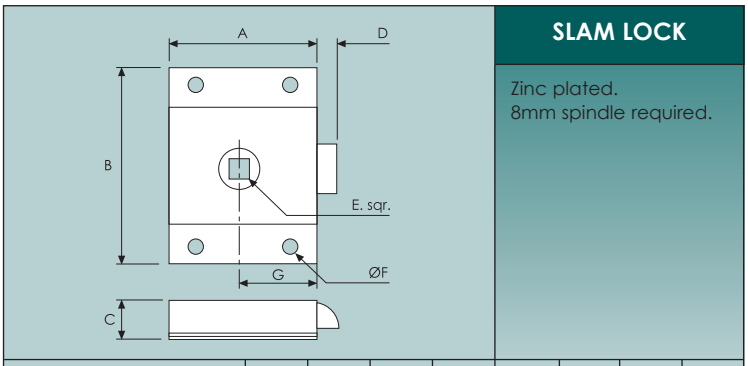

SLAM LOCK

Zinc plated.
8mm spindle required.

	A	B	C	D	E	F	G	H
9800/2056					**Weight 260g/9.2oz**			
METRIC (mm)	*68.0*	*86.0*	*19.0*	*11.0*	*8.00*	*5.00*	*24.0*	
IMPERIAL (ins)	*2.68*	*3.40*	*0.75*	*0.43*	*0.32*	*0.20*	*0.95*	
2073/002					**Weight 190g/6.7oz**			
METRIC (mm)	*60.0*	*80.0*	*15.0*	*16.0*	*8.00*	*8.50*	*33.0*	
IMPERIAL (ins)	*2.36*	*3.15*	*0.59*	*0.63*	*0.32*	*0.35*	*1.30*	

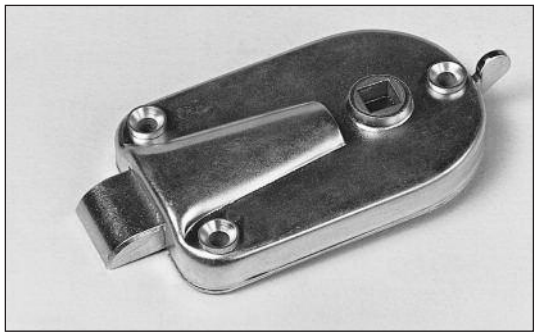

5589/225 left hand shown.

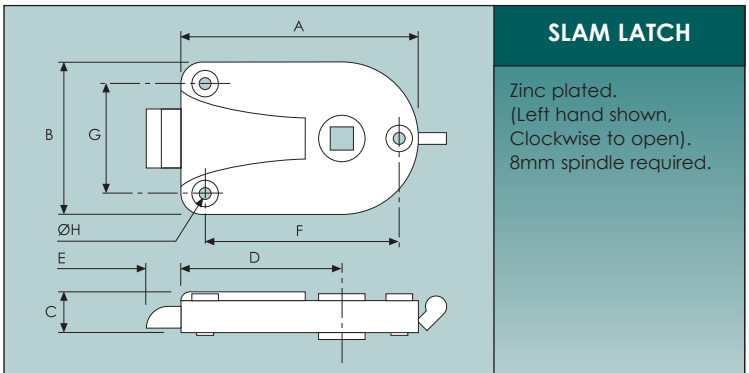

SLAM LATCH

Zinc plated.
(Left hand shown, Clockwise to open).
8mm spindle required.

	A	B	C	D	E	F	G	H
5589/224	**RH, with safety latch**				**Weight 240g/8.5oz**			
5589/225	**LH, with safety latch**							
5589/226	**RH, no safety latch**							
5589/227	**LH, no safety latch**							
METRIC (mm)	*95.3*	*61.0*	*15.8*	*67.3*	*15.8*	*76.2*	*43.2*	*5.0*
IMPERIAL (ins)	*3.75*	*2.40*	*0.62*	*2.65*	*0.62*	*3.00*	*1.70*	*0.20*

9500/1000 left hand shown.

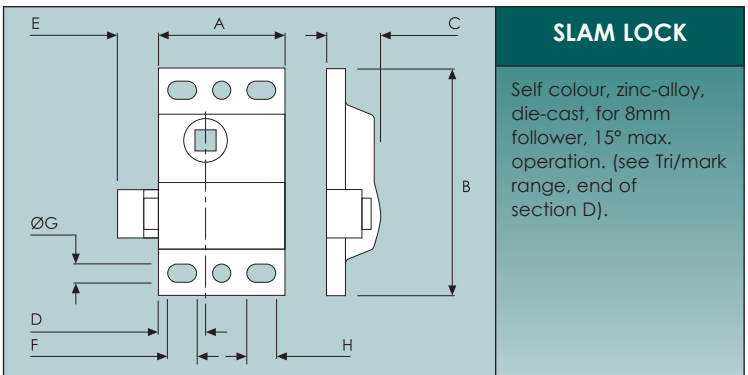

SLAM LOCK

Self colour, zinc-alloy, die-cast, for 8mm follower, 15° max. operation. (see Tri/mark range, end of section D).

	A	B	C	D	E	F	G	H
9500/1000	**Left hand (shown)**				**Weight 260g/9.2oz**			
9500/1001	**Right hand**							
METRIC (mm)	*50.8*	*88.9*	*21.7*	*19.1*	*16.0*	*11.4*	*6.60*	*9.50*
IMPERIAL (ins)	*2.00*	*3.50*	*0.85*	*0.75*	*0.63*	*0.45*	*0.26*	*0.37*

Slam Locks

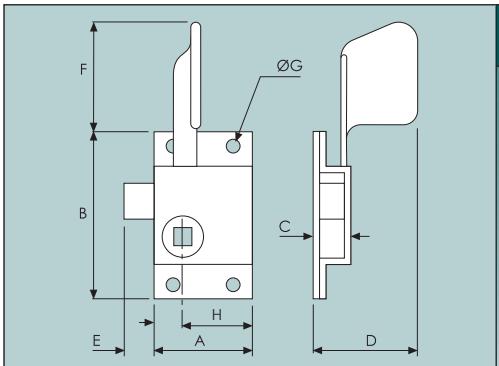

PLANT-ON, SLAM LOCK

Zinc plated pressed steel case with malleable iron tongue.
Plastic dip-coated handle.
8mm square spindle required.

		A	B	C	D	E	F	G	H
0860/001	**Left hand**					**Weight 270g/9.5oz**			
0860/002	**Right hand (shown)**								
METRIC (mm)		*51*	*86*	*16*	*45*	*16*	*56*	*5*	*19*
IMPERIAL (ins)		*2*	*3.4*	*0.63*	*1.77*	*0.63*	*2.21*	*0.2*	*0.75*

0860/002, right hand shown.

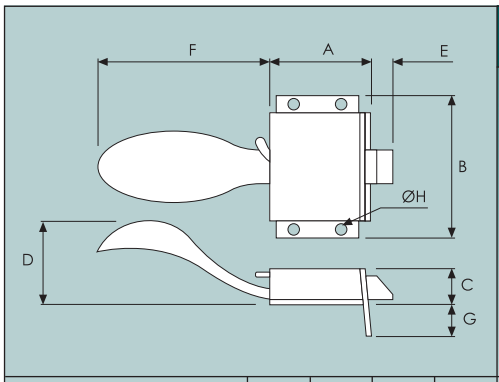

PLANT-ON, SLAM LOCK

Pressed steel case and handle.
Malleable iron tongue.

		A	B	C	D	E	F	G	H
2121/001	**Self colour, non locking**					**Weight 310g/11oz**			
2121/002	**Self colour, locking**								
2121/003	**Zinc plated, non locking**								
2121/004	**Zinc plated, locking**								
METRIC (mm)		*51*	*84*	*20*	*38*	*10*	*104*	*19*	*5*
IMPERIAL (ins)		*2*	*3.31*	*0.8*	*1.5*	*0.39*	*4.1*	*0.75*	*0.2*

2121/004 locking shown.

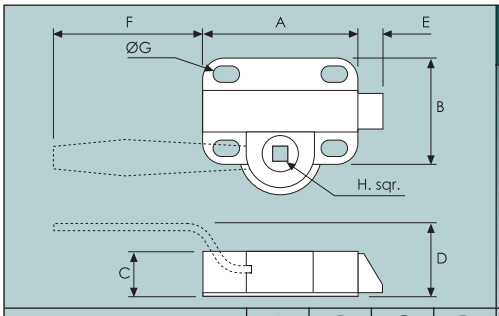

PLANT-ON, SLAM LOCK

Zinc plated pressed steel case with plastic back plate and nylon tongue.
Plastic dip-coated handle.
(Type B shown).

		A	B	C	D	E	F	G	H
2400/001	**Type A - no handle**					**Weight 190g/6.7oz**			
2400/002	**Type B - no handle**								
2410/001	**Type A - with handle**					**Weight 280g/10oz**			
2410/002	**Type B - with handle**								
METRIC (mm)		*92*	*65*	*27*	*46*	*17*	*90*	*8*	*8*
IMPERIAL (ins)		*3.62*	*2.6*	*1.06*	*1.81*	*0.67*	*3.54*	*0.32*	*0.32*

2410/002 type 'B' shown.

0891/001 left hand shown.

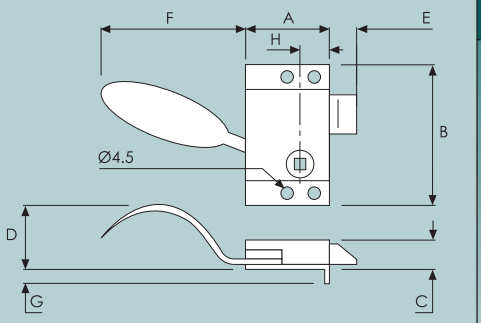

PLANT-ON, SLAM LOCK

Pressed steel case and handle.
Malleable iron tongue.
(Left hand shown).

	A	B	C	D	E	F	G	H
0891/001	**Zinc plated, left hand**				**Weight 300g/10.6oz**			
0891/002	**Zinc plated, right hand**							
0891/005	**Self colour, left hand**							
0891/006	**Self colour, right hand**							
METRIC (mm)	*52.0*	*88.0*	*17.0*	*37.0*	*20.0*	*87.0*	*9.00*	*20.0*
IMPERIAL (ins)	*2.05*	*3.50*	*0.67*	*1.46*	*0.80*	*3.43*	*0.35*	*0.79*

2115/001 left hand shown.

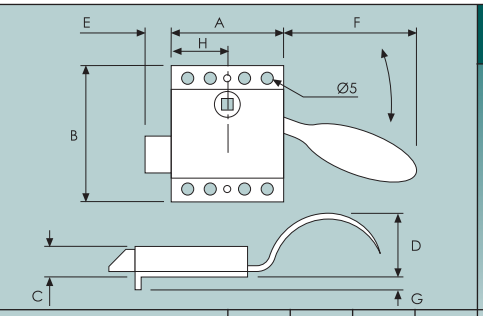

PLANT-ON, SLAM LOCK

Pressed steel case with malleable iron tongue and PVC dip-coated handle.
(Left hand shown).

	A	B	C	D	E	F	G	H
2115/001	**Zinc plated, left hand**				**Weight 370g/13.1oz**			
2115/002	**Zinc plated, right hand**							
2115/003	**Black enamelled, left hand**							
2115/004	**Black enamelled, right hand**							
METRIC (mm)	*70.0*	*87.0*	*16.0*	*42.0*	*16.0*	*80.0*	*7.00*	*38.0*
IMPERIAL (ins)	*2.76*	*3.43*	*0.63*	*1.65*	*0.63*	*3.15*	*0.28*	*1.50*

Strikers

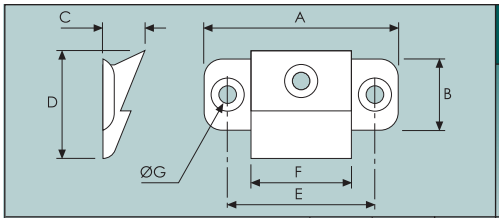

STRIKER

Self colour, die-cast with serrated base.

	A	B	C	D	E	F	G	H
2261/001					**Weight 50g/1.8oz**			
METRIC (mm)	*58*	*22*	*13*	*30*	*43*	*29*	*5*	
IMPERIAL (ins)	*2.28*	*0.87*	*0.52*	*1.18*	*1.7*	*1.14*	*0.2*	

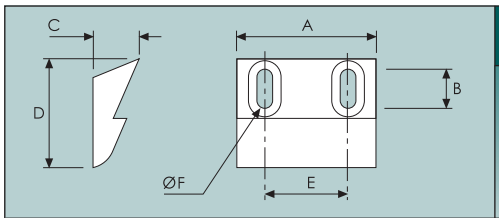

STRIKER

Self colour, die-cast with serrated base.

	A	B	C	D	E	F	G	H
2268/001					**Weight 40g/1.4oz**			
METRIC (mm)	*38*	*8*	*12*	*32*	*25*	*5*		
IMPERIAL (ins)	*1.5*	*0.32*	*0.47*	*1.26*	*0.98*	*0.2*		

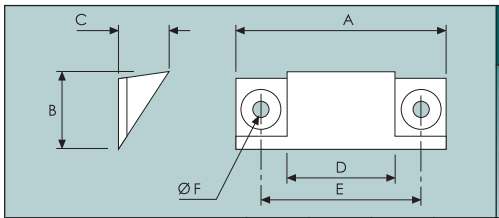

STRIKER

Self colour, malleable iron.

	A	B	C	D	E	F	G	H
2276/001					**Weight 40g/1.4oz**			
METRIC (mm)	*52*	*18*	*13*	*27*	*37.5*	*5*		
IMPERIAL (ins)	*2.0*	*0.71*	*0.52*	*1.06*	*1.48*	*0.2*		

Top - 2261/001 *Right - 2276/001*
Bottom - 2268/001

Left-0912/710 Right- 0907/514

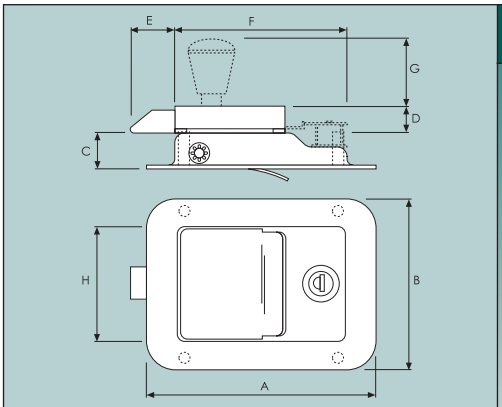

PADDLE LOCKS

Flush fitting
pressed steel body
and mechanism.
Fixing via 4 x Ø4 mm
holes or 4 x M5 x 20mm
studs.
2 keys supplied with
locking paddles.
See table below for full
specification & part
numbers.

	A	B	C	D	E	F	G	H
0907	**FOR PART NUMBERS SEE BELOW**							
METRIC (mm)	*140*	*89.0*	*22.0*	*16.0*	*23.0*	*110*	*42.0*	*60.0*
IMPERIAL (ins)	*5.51*	*3.50*	*0.87*	*0.63*	*0.91*	*4.33*	*1.65*	*2.36*
0912 & 0913	**FOR PART NUMBERS SEE BELOW**							
METRIC (mm)	*140*	*108*	*22.0*	*16.0*	*23.0*	*110*	*42.0*	*78.0*
IMPERIAL (ins)	*5.51*	*4.25*	*0.87*	*0.63*	*0.91*	*4.33*	*1.65*	*3.07*

· DESCRIPTION · DESCRIPTION · DESCRIPTION · DESCRIPTION · DESCRIPTION · DESCRIPTION · DESCRIPTION ·					
FINISH	**LOCKING**	**INTERNAL RELEASE**	**FIXING**	**WEIGHT**	**PART NUMBER**
Zinc plated	*No*	*No*	*Blank*	*350g/12.4oz*	*0907/001*
Zinc plated	*No*	*Yes*	*Blank*	*370g/13.1oz*	*0907/003*
Zinc plated	*No*	*No*	*Studs*	*370g/13.1oz*	*0907/005*
Zinc plated	*Keyed in pairs*	*No*	*Blank*	*420g/14.8oz*	*0907/010*
Zinc plated	*Keyed 64001*	*No*	*Blank*	*430g/15.2oz*	*0907/011*
Zinc plated	*Keyed in pairs*	*Yes*	*Blank*	*460g/1.02lb*	*0907/014*
Zinc plated	*Keyed 64001*	*Yes*	*Blank*	*460g/1.02lb*	*0907/015*
All black	*No*	*No*	*Studs*	*420g/14.8oz*	*0907/202*
All black	*Keyed in pairs*	*No*	*Blank*	*420g/14.8oz*	*0907/210*
All black	*Keyed 64001*	*No*	*Blank*	*430g/15.2oz*	*0907/211*
All black	*Keyed 64001*	*No*	*Studs*	*350g/12.4oz*	*0907/213*
Black & Stainless	*Keyed in pairs*	*No*	*Blank*	*420g/14.8oz*	*0907/510*
Black & Stainless	*Keyed 64001*	*No*	*Blank*	*420g/14.8oz*	*0907/511*
Black & stainless	*Keyed in pairs*	*Yes*	*Blank*	*460g/1.02lb*	*0907/514*
· DESCRIPTION · DESCRIPTION · DESCRIPTION · DESCRIPTION · DESCRIPTION · DESCRIPTION · DESCRIPTION ·					
Stainless steel	*No*	*No*	*Holes*	*390g/13.8oz*	*0912/401*
Stainless steel	*Keyed in pairs*	*No*	*Holes*	*450g/1lb*	*0912/410*
Stainless steel	*Keyed 64001*	*No*	*Holes*	*450g/1lb*	*0912/411*
Stainless steel	*Keyed in pairs*	*No*	*Holes*	*450g/1lb*	*0912/710*
· DESCRIPTION · DESCRIPTION · DESCRIPTION · DESCRIPTION · DESCRIPTION · DESCRIPTION · DESCRIPTION ·					
Zinc plated	*Keyed in pairs*	*No*	*Holes*	*480g/1.06lb*	*0913/010*

*N.B. *0912 paddles are supplied with a pressed stainless steel tongue except 0912/710 which is supplied with a solid steel tongue with a chemical black finish.*
All other paddle locks are supplied with zinc plated, pressed steel tongues.
Any other combination of fixing, finish, locking, etc., is available on request.

Walsall: 01922 471000 Heywood: 01706 692110 Romsey: 01794 525870 www.albert-jagger.co.uk

Paddle Locks

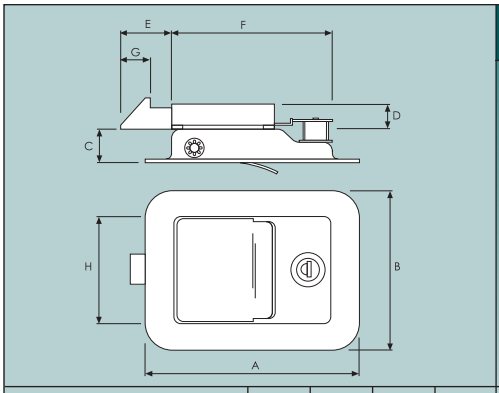

PADDLE LOCKS

Zinc plated steel body with solid, mild steel tongue.
Flush fitting.
Locking with 2 keys supplied.

	A	B	C	D	E	F	G	H
0907/018	**Keyed in pairs**				**Weight 460g/1lb**			
0907/019	**Keyed alike**				**Weight 460g/1lb**			
METRIC (mm)	*140*	*89.0*	*22.0*	*16.0*	*24.0*	*110*	*12.5*	*60.0*
IMPERIAL (ins)	*5.51*	*3.50*	*0.87*	*0.63*	*0.95*	*4.33*	*0.49*	*2.36*

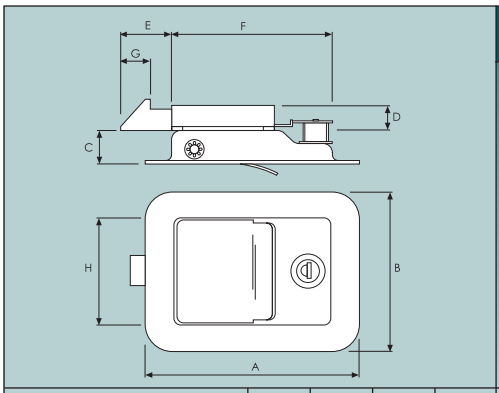

PADDLE LOCKS

Black & stainless body with solid, mild steel tongue.
Flush fitting.
Locking with 2 keys supplied.

	A	B	C	D	E	F	G	H
0907/518	**Keyed in pairs**				**Weight 460g/1lb**			
0907/519	**Keyed alike**				**Weight 460g/1lb**			
METRIC (mm)	*140*	*89.0*	*22.0*	*16.0*	*24.0*	*110*	*12.5*	*60.0*
IMPERIAL (ins)	*5.51*	*3.50*	*0.87*	*0.63*	*0.95*	*4.33*	*0.49*	*2.36*

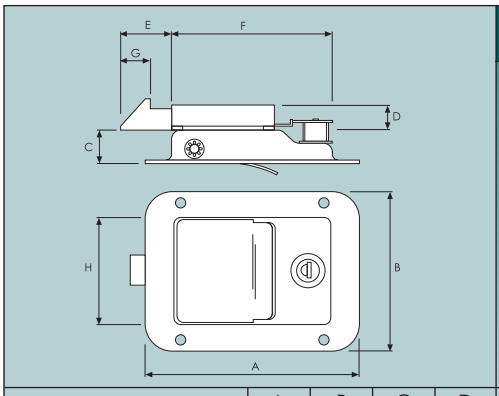

PADDLE LOCKS

304 stainless steel body with solid, mild steel tongue.
Flush fitting via 4 x Ø4mm holes.
Locking paddles supplied with 2 keys.

	A	B	C	D	E	F	G	H
0912/405	**Non locking**				**Weight 490g/1.1lb**			
0912/418	**Keyed in pairs**				**Weight 490g/1.1lb**			
0912/419	**Keyed alike**				**Weight 490g/1.1lb**			
METRIC (mm)	*140*	*108*	*22.0*	*16.0*	*24.0*	*110*	*12.5*	*78.0*
IMPERIAL (ins)	*5.51*	*4.25*	*0.87*	*0.63*	*0.95*	*4.33*	*0.49*	*3.07*

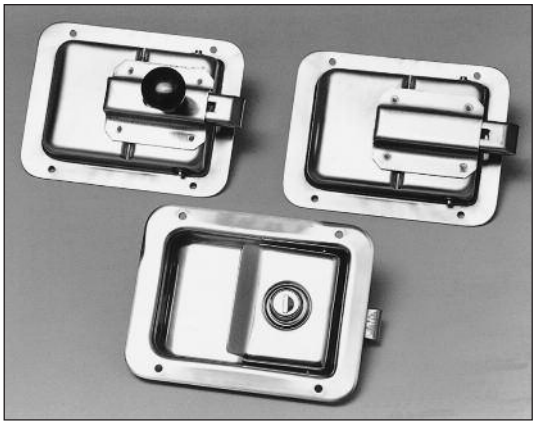

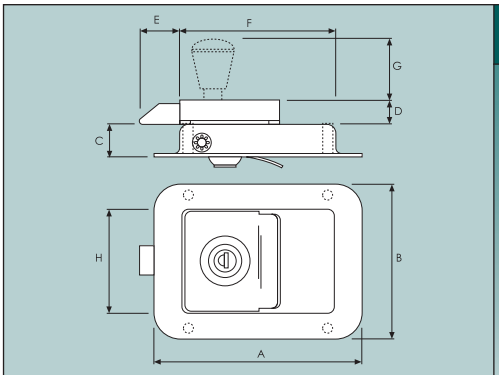

PADDLE LOCKS

Flush fitting.
Pressed stainless steel body & tongue.
Fixing = Ø4 mm holes or M5 x 20 mm studs (see descriptions).
Clamp-plate is zinc plated, mild steel.

	A	B	C	D	E	F	G	H
0910	**FOR PART NUMBERS SEE BELOW**							
METRIC (mm)	*140*	*108*	*22.0*	*16.0*	*23.0*	*110*	*42.0*	*78.0*
IMPERIAL (ins)	*5.51*	*4.25*	*0.87*	*0.63*	*0.91*	*4.33*	*1.65*	*3.07*

· DESCRIPTION ·	· DESCRIPTION ·	· DESCRIPTION ·	· DESCRIPTION ·	· DESCRIPTION ·	· DESCRIPTION ·	· DESCRIPTION ·
FINISH	**LOCKING**	**INTERNAL RELEASE**	**FIXING**	**CLAMP PLATE**	**WEIGHT**	**PART No.**
Stainless steel	*Keyed in pairs*	*No*	*Holes*	*No*	*460g/1.01lb*	*0910/410*
Stainless steel	*Keyed 64001*	*No*	*Holes*	*No*	*460g/1.01lb*	*0910/411*
Stainless steel	*Keyed 64001*	*Yes*	*Holes*	*No*	*490g/1.08lb*	*0910/415*
Stainless steel	*Keyed 64001*	*Yes*	*Studs*	*No*	*480g/1.06lb*	*0910/417*
Stainless steel	*Keyed in pairs*	*No*	*Studs*	*Yes*	*590g/1.30lb*	*0910/430*
Stainless steel	*Keyed 64001*	*No*	*Studs*	*Yes*	*590g/1.30lb*	*0910/431*
Stainless steel	*Keyed 6400*	*Yes*	*Studs*	*Yes*	*630g/1.39lb*	*0910/433*

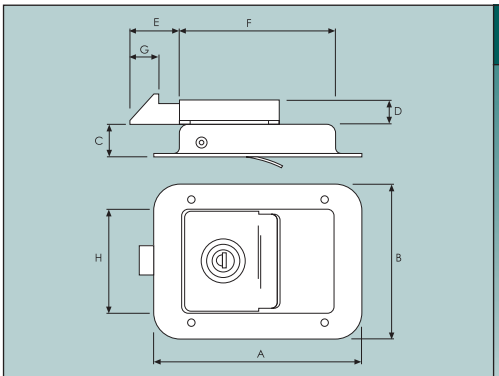

PADDLE LOCKS

Flush fitting.
Pressed stainless steel body with a cast steel tongue.
Fixing Ø4 mm holes.
Locking (keyed in pairs) with 2 keys supplied.

	A	B	C	D	E	F	G	H
0910/418					**Weight 460g/1.01lb**			
METRIC (mm)	*140*	*108*	*22.0*	*16.0*	*23.0*	*110*	*42.0*	*78.0*
IMPERIAL (ins)	*5.51*	*4.25*	*0.87*	*0.63*	*0.91*	*4.33*	*1.65*	*3.07*

Paddle Locks

PADDLE LOCK

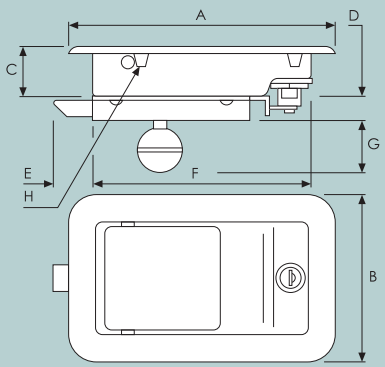

Flush fitting.
Locking (mixed keys) with 2 keys supplied.
Black poly-coated finish.
Supplied with fixing clips & screws.

	A	B	C	D	E	F	G	H
1085/001	**No interior release**				**Weight 1.1kg/2.4lb**			
1090/001	**With interior release**				**Weight 1.2kg/2.7lb**			
METRIC (mm)	*195*	*130*	*32.0*	*15.0*	*29.0*	*165*	*38.0*	*M5*
IMPERIAL (ins)	*7.68*	*5.12*	*1.26*	*0.60*	*1.14*	*6.50*	*1.50*	

WEATHERPROOF PADDLE LOCK

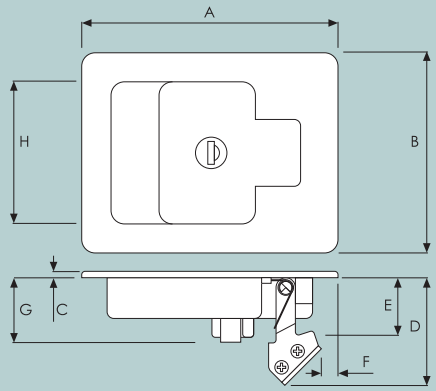

Glass filled nylon flap & body with zinc plated steel components.
Supplied with integral neoprene gasket & zinc plated steel mounting clamp.
Cut-out details available on request.
2 keys supplied.
For striker refer 5589/00406, see below.
NB: Dimension H refers to handle flap recess.

Insert shows 'moulded' nylon striker face, giving exceptionally smooth engagement action.

	A	B	C	D	E	F	G	H
5589/0700	**Mixed keys**				**Weight 384g/13.6oz**			
5589/0800	**Keyed alike**				**Weight 384g/13.6oz**			
METRIC (mm)	*140*	*108*	*3.00*	*59.0*	*32.0*	*6.00*	*39.0*	*76.0*
IMPERIAL (ins)	*5.51*	*4.25*	*0.12*	*2.32*	*1.26*	*0.24*	*1.54*	*2.99*

STRIKER

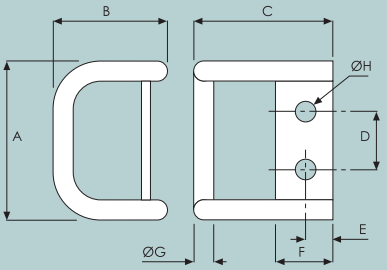

304 stainless steel.
For use with 5589/0700 - 0800 Weatherproof paddles & 5589/0500 - 0600 Oval paddles.

	A	B	C	D	E	F	G	H
5589/00406					**Weight 70g/2.5oz**			
METRIC (mm)	*55.0*	*38.0*	*48.0*	*20.0*	*10.0*	*20.0*	*6.00*	*7.00*
IMPERIAL (ins)	*2.17*	*1.50*	*1.89*	*0.79*	*0.39*	*0.79*	*0.24*	*0.76*

Insert shows clamp plates & slam bolt.

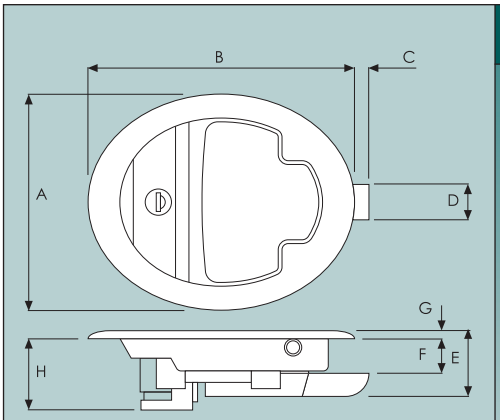

OVAL PADLOCK

Slam bolt action.
Glass filled nylon flap & body with zinc plated steel components.
Supplied with gasket & zinc plated steel mounting clamps.
Cut-out details available on request.
2 keys supplied.

	A	B	C	D	E	F	G	H
5589/0300	**Mixed keys**				**Weight 552g/1.2lb**			
5589/0400	**Keyed alike**				**Weight 552g/1.2lb**			
METRIC (mm)	*120*	*150*	*10.0*	*19.0*	*40.0*	*21.0*	*4.00*	*40.0*
IMPERIAL (ins)	*4.72*	*5.91*	*0.39*	*0.75*	*1.56*	*0.83*	*0.16*	*1.56*

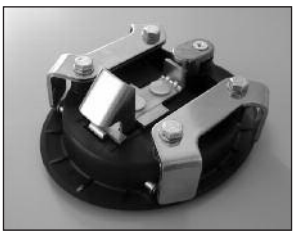

Insert shows clamp plates & pressed steel striker.

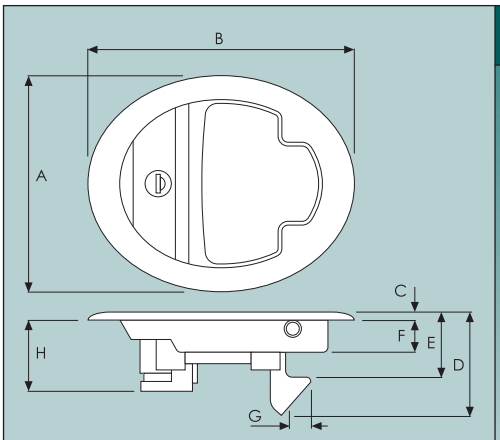

OVAL PADLOCK

Glass filled nylon flap & body with zinc plated steel components.
Supplied with gasket & zinc plated steel mounting clamps.
Cut-out details available on request.
2 keys supplied.
For striker refer 5589/00406, page d8.

	A	B	C	D	E	F	G	H
5589/0500	**Mixed keys**				**Weight 435g/15.3oz**			
5589/0600	**Keyed alike**				**Weight 435g/15.3oz**			
METRIC (mm)	*120*	*150*	*4.00*	*57.0*	*36.0*	*19.0*	*12.0*	*40.0*
IMPERIAL (ins)	*4.72*	*5.91*	*0.16*	*2.24*	*1.42*	*0.75*	*0.47*	*1.56*

albert Jagger limited

Paddle Locks

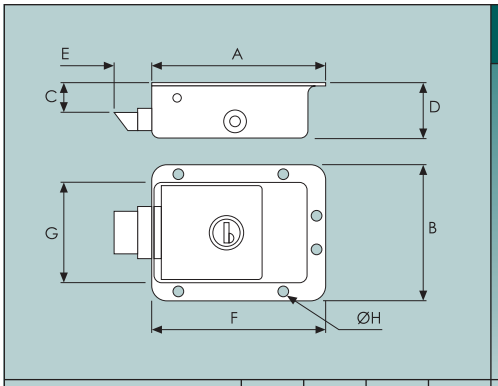

PADDLE LOCK

Flush fitting, stainless steel.
Locking c/w stainless steel striker.

	A	B	C	D	E	F	G	H
9810/3140					**Weight 680g/1.5lb**			
METRIC (mm)	*132*	*99.0*	*23.0*	*40.0*	*28.0*	*122*	*78.0*	*5.00*
IMPERIAL (ins)	*5.20*	*3.90*	*0.91*	*1.58*	*1.10*	*4.80*	*3.07*	*0.20*
9810/3150	**Spare striker**				**Weight 60g/2.1oz**			

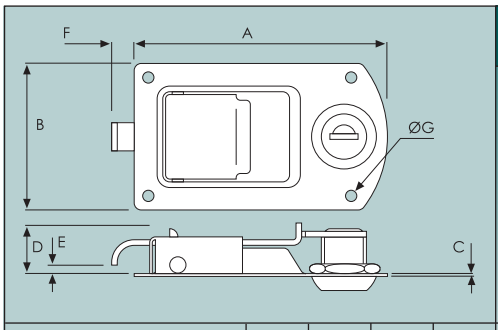

MINI FLUSH LOCK

Pressed, 304 stainless steel construction.
Locking with 2 keys supplied (differs).

	A	B	C	D	E	F	G	H
0877/001					**Weight 150g/5.3oz**			
METRIC (mm)	*89.0*	*51.0*	*1.00*	*18.0*	*5.00*	*8.00*	*4.00*	
IMPERIAL (ins)	*3.50*	*2.00*	*0.04*	*0.71*	*0.20*	*0.32*	*0.16*	

www.albert-jagger.co.uk Walsall: 01922 471000 Heywood: 01706 692110 Romsey: 01794 525870

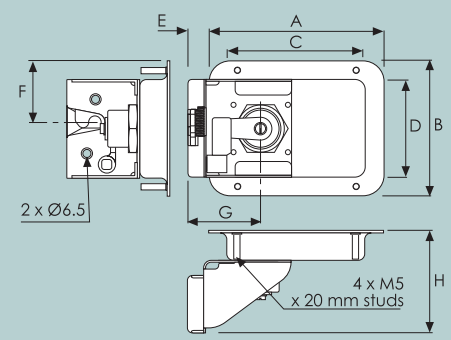

PUSH -BUTTON PADDLE HANDLE

Black powder-coated, pressed steel pan, a glass filled nylon handle, & zinc-plated, pressed steel latch mechanism with a gold passivated finish. Locking (64001) with 2 keys supplied. Supplied c/w bezel. For striker refer to 9301/101 (below).

	A	B	C	D	E	F	G	H
0916/3070 **Left hand, standard** **Weight 660g/1.5lb**								
0916/3071 **Right hand, standard (shown)**								
METRIC (mm)	*140*	*108*	*114*	*80.0*	*20.0*	*48.0*	*58.0*	*82.0*
IMPERIAL (ins)	*5.51*	*4.25*	*4.49*	*3.15*	*0.79*	*1.89*	*2.28*	*3.23*

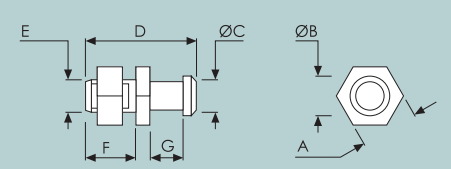

STRIKER

Zinc plated and gold passivated.

	A	B	C	D	E	F	G	H
9301/101 **Weight 50g/1.8oz**								
METRIC (mm)	*19*	*14*	*9*	*42*	*M12*	*18*	*14*	
IMPERIAL (ins)	*0.75*	*0.55*	*0.35*	*1.65*		*0.71*	*0.55*	

Rod Locks

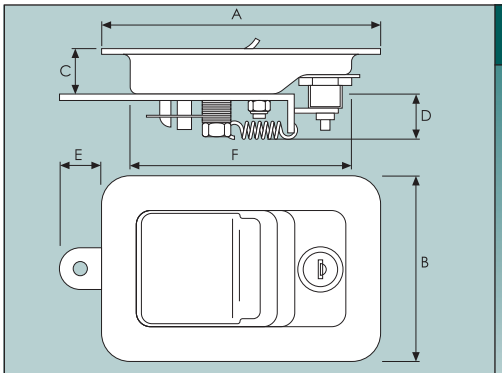

LUGGAGE COMPARTMENT LOCKS

To suit 1235 mm door width.
For details on 2477/001, end slams see d16.

	A	B	C	D	E	F	G	H
0881 & 0883	**For Part Numbers see below**							
METRIC (mm)	*140*	*89*	*20*	*20*	*20*	*110*		
IMPERIAL (ins)	*5.51*	*3.5*	*0.8*	*0.8*	*0.8*	*4.33*		
0883/010	**Luggage lock c/w rods and 2 slams**							
	Zinc plated lock (locking) with 2477 slams							
0883/510	**Luggage lock c/w rods and 2 slams**							
	Black & Stainless lock (locking) with 2477 slams							
0881/510	**Centre lock only. Black and stainless (locking)**							

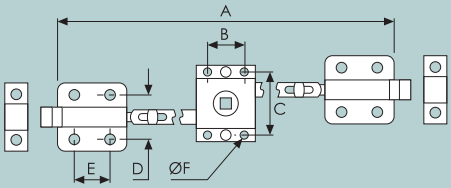

2 WAY SLAM LATCH

Zinc plated and gold passivated.
Outside handle (not supplied) turns clock-wise to unlatch.
8mm square spindle required.

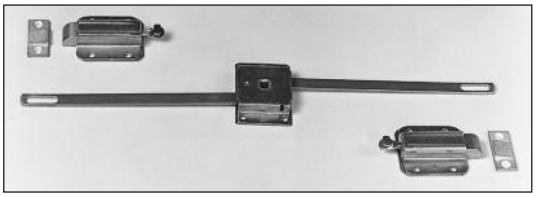

	A	B	C	D	E	F	G	H
5589/180								
METRIC (mm)	*1440*	*38.1*	*57.2*	*44.5*	*33*	*3.8*		
IMPERIAL (ins)	*56.7*	*1.5*	*2.25*	*1.75*	*1.3*	*0.15*		

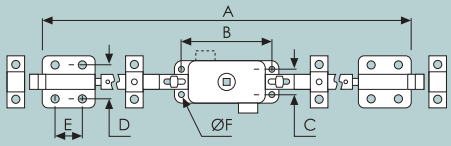

3 WAY SLAM LATCH

Zinc plated and gold passivated.
Outside handle (not supplied) turns clock-wise to unlatch.
8mm square spindle required.

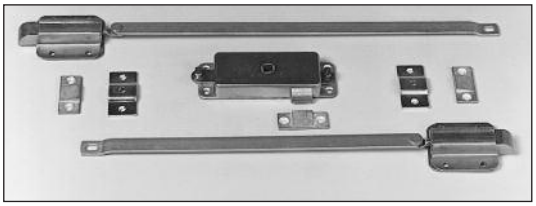

	A	B	C	D	E	F	G	H
5589/212								
METRIC (mm)	*2057*	*114.3*	*28.5*	*44.5*	*33*	*5*		
IMPERIAL (ins)	*81*	*4.5*	*1.12*	*1.75*	*1.3*	*0.2*		

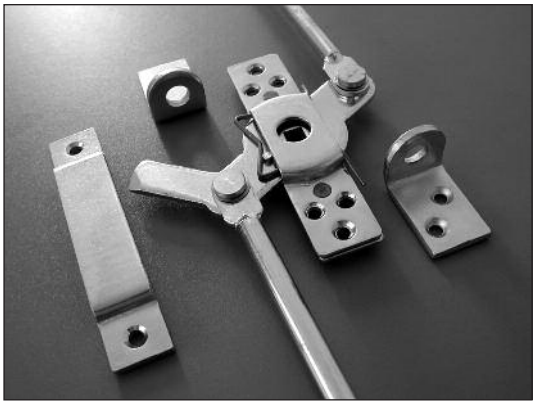

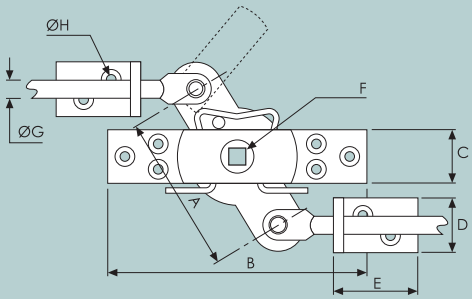

ROD LOCKS

Zinc plated. Supplied with 2 x 1135mm rods, & guides.
NB Rod dimension from tip to tip in locked position is 2.31m (7'7") with a throw of 35mm (1.37").
0770/011 keeper required (see below).

	A	B	C	D	E	F	G	H
0770/001 Type A (shown) 0770/002 Type B							**Weight 1.6kg/3.5lb**	
METRIC (mm)	*76.2*	*118*	*26.0*	*26.0*	*40.0*	*8.00*	*9.50*	*5.00*
IMPERIAL (ins)	*3.00*	*4.65*	*1.02*	*1.02*	*1.58*	*0.32*	*0.37*	*0.20*
3 WAY WITH TONGUE								
0771/001 Type A (shown) 0771/002 Type B							**Weight 1.5kg/3.3lb**	
METRIC (mm)	*76.2*	*118*	*26.0*	*26.0*	*40.0*	*8.00*	*9.50*	*5.00*
IMPERIAL (ins)	*3.00*	*4.65*	*1.02*	*1.02*	*1.58*	*0.32*	*0.37*	*0.20*
2 WAY NO TONGUE								

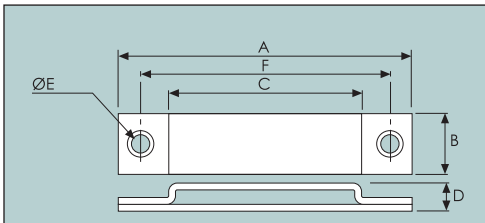

KEEPER

Zinc plated.
To fit 0770 rod locks.

	A	B	C	D	E	F	G	H
0770/011							**Weight 100g/3.5oz**	
METRIC (mm)	*121*	*22.5*	*81.0*	*10.0*	*5.00*	*101*		
IMPERIAL (ins)	*4.76*	*0.89*	*3.20*	*0.40*	*0.20*	*3.98*		

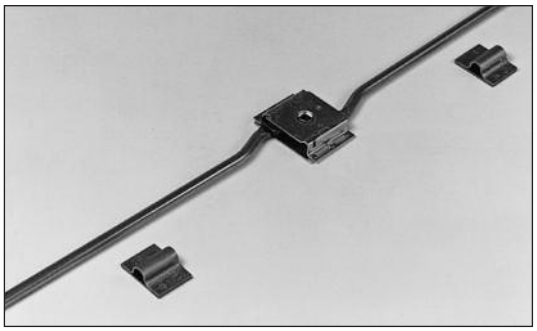

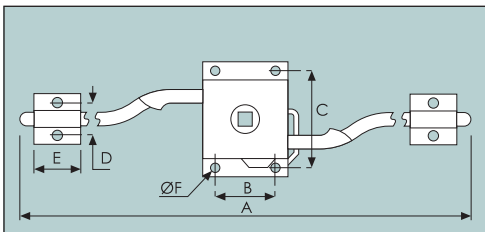

2 WAY ROD LOCK

Zinc plated and gold passivated.
Supplied with Ø9.5 mm bars with a total length of 1092 mm.
24 mm max. throw.

	A	B	C	D	E	F	G	H
5589/216 Right hand 5589/218 Left hand (shown)								
METRIC (mm)	*2210*	*38.1*	*57.2*	*22.1*	*25.4*	*4.32*		
IMPERIAL (ins)	*87.0*	*1.50*	*2.25*	*0.87*	*1.00*	*0.17*		

Rod Locks

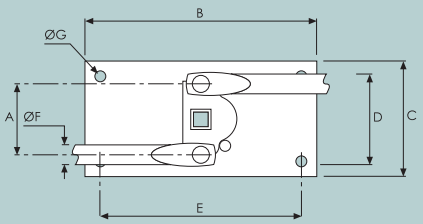

ROD LOCK (2 WAY)

Self colour steel. Supplied with 2 x 914mm (3')rods. NB. Rod dimension from tip to tip in locked position is 1.85m (6'1") with a throw of 19mm (0.75"). 8mm square spindle required.

	A	B	C	D	E	F	G	H
2298/002					**Weight 1.21kg/2.7lb**			
METRIC (mm)	*37*	*121*	*63*	*45*	*105*	*9.5*	*5*	
IMPERIAL (ins)	*1.46*	*4.76*	*2.48*	*1.77*	*4.13*	*0.38*	*0.2*	

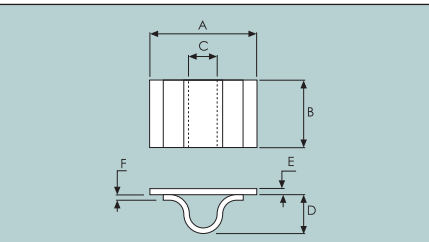

ROD GUIDE

Self colour steel.

	A	B	C	D	E	F	G	H
2298/003					**Weight 50g/1.8oz**			
METRIC (mm)	*40*	*32*	*10*	*13*	*2*	*2*		
IMPERIAL (ins)	*1.58*	*1.26*	*0.4*	*0.51*	*0.08*	*0.08*		

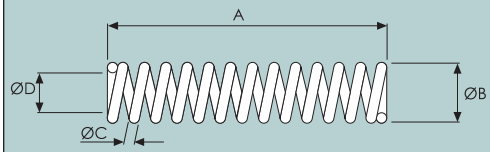

ROD SPRING

Self colour steel.

	A	B	C	D	E	F	G	H
2298/004					**Weight 10g/0.4oz**			
METRIC (mm)	*68*	*16*	*1.5*	*13*				
IMPERIAL (ins)	*2.68*	*0.63*	*0.06*	*0.51*				

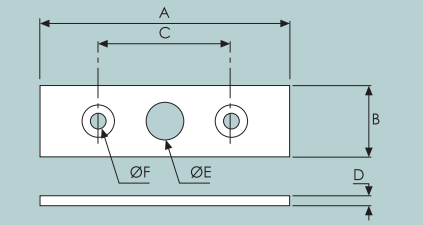

BOTTOM SOCKET

Self colour steel.

	A	B	C	D	E	F	G	H
2298/006					**Weight 10g/0.4oz**			
METRIC (mm)	*50*	*19*	*38*	*1.5*	*9.5*	*4*		
IMPERIAL (ins)	*1.97*	*0.75*	*1.5*	*0.06*	*0.38*	*0.16*		

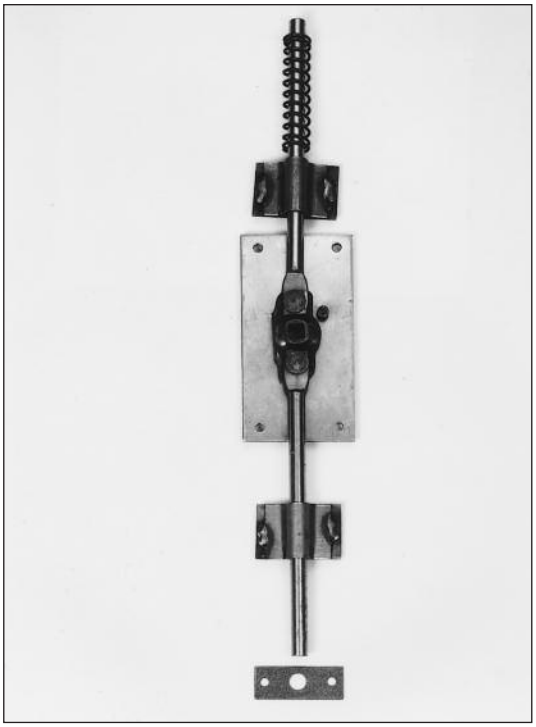

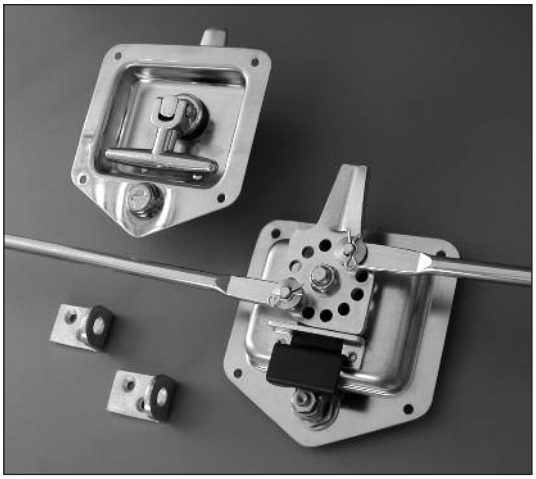

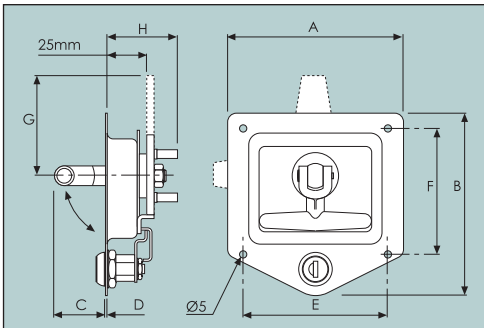

RECESSED DROP 'T' ROD LOCK

Polished 304 stainless steel dish with a chrome plated die-cast 'T'.
Zinc plated steel tongue.
Complete with EPDM gasket.
Supplied with 2 rods (1150mm long) & 2 rod guides.
2328mm tip/tip (closed).
For recessed drop T handle only refer to page d37

	A	B	C	D	E	F	G	H
0864/1000	**2 point locking**				**Weight 700g/1.5lb**			
	Universal, keyed alike							
0864/2000	**2 point locking**				**Weight 700g/1.5lb**			
	Universal, mixed keys							
0865/1000	**3 point locking**				**Weight 700g/1.5lb**			
	Left hand, keyed alike							
0865/2000	**3 point locking**				**Weight 700g/1.5lb**			
	Right hand, keyed alike							
0865/3000	**3 point locking**				**Weight 700g/1.5lb**			
	Left hand, mixed keys							
0865/4000	**3 point locking**				**Weight 700g/1.5lb**			
	Right hand, mixed keys							
METRIC (mm)	*120*	*124*	*36.0*	*1.50*	*98.0*	*84.0*	*68.0*	*47.0*
IMPERIAL (ins)	*4.72*	*4.88*	*1.42*	*0.02*	*3.86*	*3.31*	*2.68*	*1.85*

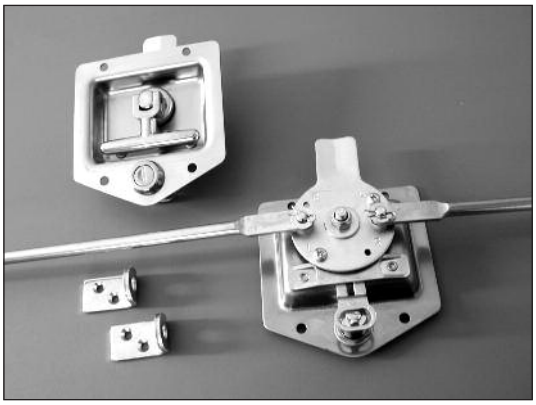

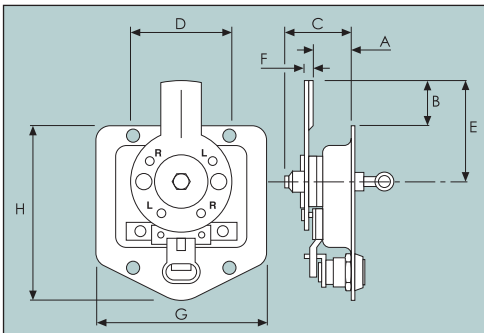

3 WAY ROD LOCK

C/w recessed drop 'T' handle & zinc plated, mild steel rod & guides.
Throw = 25 mm (1")
Tip to tip dim. (engaged) = 2340 mm (92").
Adjustable for left or right hand operation.
For recessed drop-'T' handle only see page d37.

	A	B	C	D	E	F	G	H
5589/609	**Stainless steel**				**Weight 1.5kg/3.3lb**			
5589/611	**Zinc plated**							
	Locking with random keys							
5589/610	**Stainless steel**				**Weight 1.5kg/3.3lb**			
5589/612	**Zinc plated**							
	Locking, keyed alike							
METRIC (mm)	*27*	*30*	*40*	*52*	*70*	*5.0*	*120*	*125*
IMPERIAL (ins)	*1.06*	*1.18*	*1.58*	*2.05*	*2.76*	*0.20*	*4.72*	*4.92*

End Slams

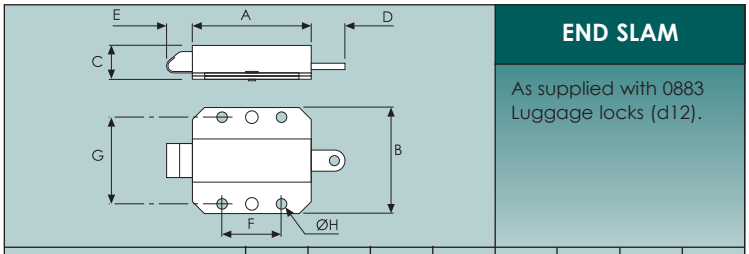

END SLAM

As supplied with 0883 Luggage locks (d12).

	A	B	C	D	E	F	G	H
2477/001	**Zinc plated**				**Weight 140g/5oz**			
METRIC (mm)	*67*	*54*	*17*	*19*	*14*	*33*	*45*	*5*
IMPERIAL (ins)	*2.64*	*2.13*	*0.67*	*0.75*	*0.55*	*1.3*	*1.77*	*0.2*

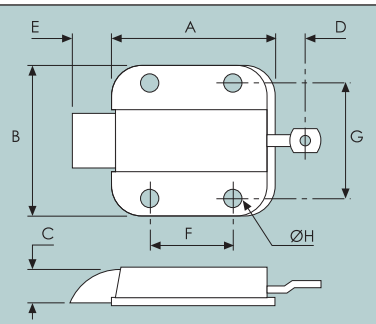

END SLAM

Zinc plated and gold passivated.
Reversible bolts.

*NB Dimension E is variable from 9mm to 16mm.

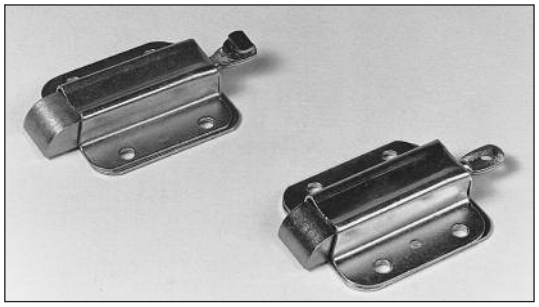

Left-5589/2232 *Right- 5589/2231*

	A	B	C	D	E	F	G	H
5589/2231	**Without rivet** **For use with 3 way slam system**							
5589/2232	**With rivet** **For use with 2 way slam system**							
METRIC (mm)	*62.2*	*57.2*	*12.7*	*12.7*	*	*33*	*44.5*	*5.6*
IMPERIAL (ins)	*2.45*	*2.25*	*0.5*	*0.5*		*1.3*	*1.75*	*0.22*

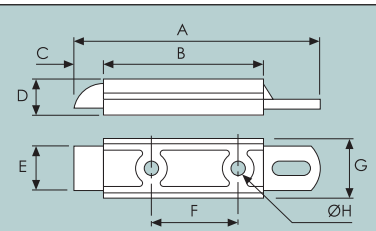

END SLAM

Black copolymer mouldings with stainless steel springs.

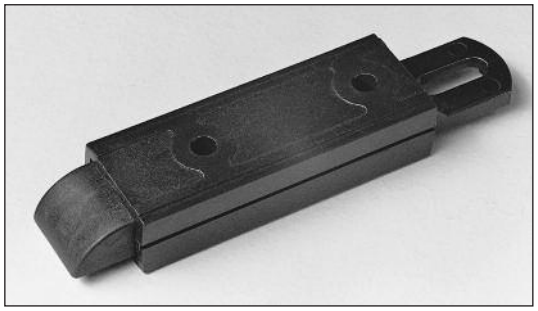

	A	B	C	D	E	F	G	H
2475/001					**Weight 50g/1.8oz**			
METRIC (mm)	*125*	*80*	*15*	*18*	*22*	*44*	*29*	*6.5*
IMPERIAL (ins)	*4.92*	*3.15*	*0.59*	*0.71*	*0.87*	*1.73*	*1.14*	*0.26*

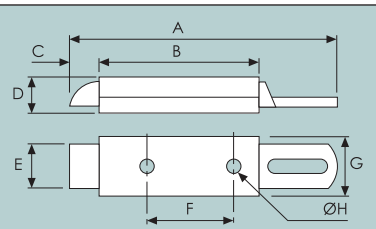

END SLAM

Zinc plated mild steel.

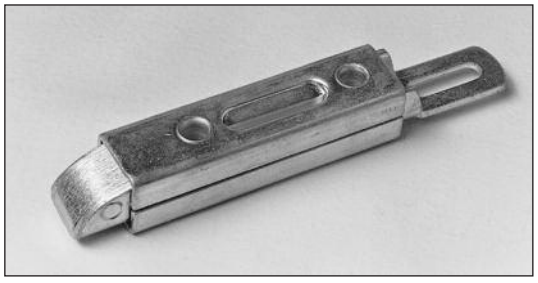

	A	B	C	D	E	F	G	H
9800/3830					**Weight 140g/5oz**			
METRIC (mm)	*124*	*75*	*15*	*20*	*16*	*44*	*21*	*6.5*
IMPERIAL (ins)	*4.88*	*2.95*	*0.59*	*0.79*	*0.63*	*1.73*	*0.83*	*0.26*

Slam Bolts

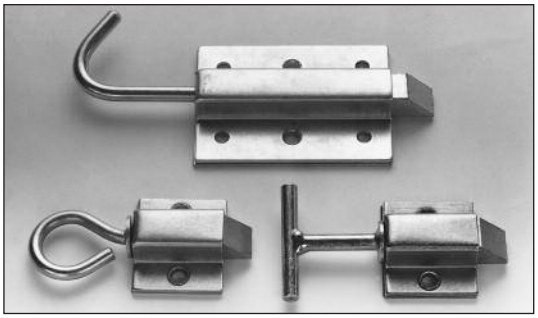

Top- 2482/001
Bottom left -2467/001 *Bottom right- 2467/002*

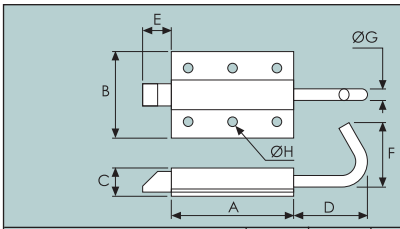

HOOK TAIL SLAM BOLT

Zinc-plated, mild-steel with hook end.

	A	B	C	D	E	F	G	H
2482/001					**Weight 200g/7.1oz**			
METRIC (mm)	*77*	*55*	*17*	*48*	*18*	*40*	*6*	*5.5*
IMPERIAL (ins)	*3.03*	*2.17*	*0.67*	*1.89*	*0.71*	*1.58*	*0.24*	*0.22*

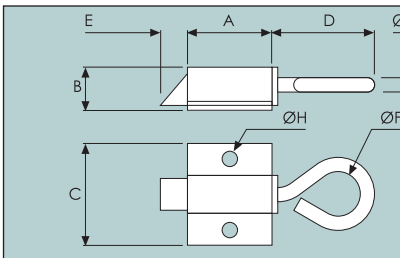

RING TAIL SLAM BOLT

Zinc plated & gold passivated, mild steel. Bolt can be removed & rotated in 90° increments to change strike (slam) direction.
* Dim.e, adjustable = 10 to 15mm.

	A	B	C	D	E	F	G	H
2467/001					**Weight 80g/2.8oz**			
METRIC (mm)	*34*	*17*	*40*	*38*	*	*18*	*5*	*5*
IMPERIAL (ins)	*1.34*	*0.67*	*1.58*	*1.5*		*0.71*	*0.2*	*0.2*

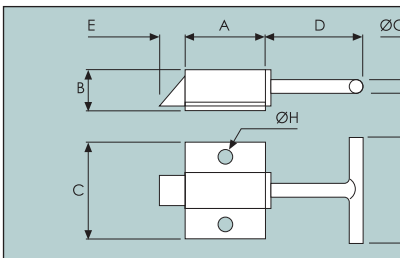

'T' TAIL SLAM BOLT

Zinc plated & gold passivated, mild steel. Bolt can be removed & rotated in 90° increments to change strike (slam) direction.
* Dim.e, adjustable = 10 to 15mm.

	A	B	C	D	E	F	G	H
2467/002					**Weight 80g/2.8oz**			
METRIC (mm)	*34*	*17*	*40*	*35*	*	*45*	*6*	*5*
IMPERIAL (ins)	*1.34*	*0.67*	*1.58*	*1.38*		*1.77*	*0.24*	*0.2*

Budget Locks

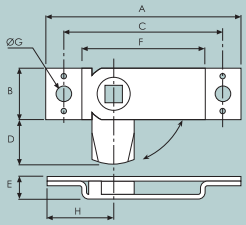

BUDGET LOCKS

Left hand shown.
All operated by 'T'-key or 8 mm square drive, except 0747 which takes 'T'-key only.

	A	B	C	D	E	F	G	H
0125/001	**Universal**				**Weight 50g/1.8oz**			
METRIC (mm)	*85*	*23*	*67*	*16*	*8*	*55*	*6*	*37*
IMPERIAL (ins)	*3.35*	*0.91*	*2.64*	*0.63*	*0.32*	*2.17*	*0.24*	*1.46*
Zinc plated case & nylon tongue								
0746/003 **0746/004**	**Left hand (shown)** **Right hand**				**Weight 70g/2.5oz**			
METRIC (mm)	*81*	*23*	*70*	*19*	*12*	*55*	*5*	*23*
IMPERIAL (ins)	*3.2*	*0.9*	*2.76*	*0.75*	*0.47*	*2.17*	*0.2*	*0.91*
Zinc plated case & brass tongue								
0747/001 **0747/002**	**Left hand (shown)** **Right hand**				**Weight 110g/3.9oz**			
METRIC (mm)	*103*	*25*	*82.5*	*13.5*	*11*	*59*	*4.5*	*32*
IMPERIAL (ins)	*4.06*	*0.98*	*3.25*	*0.53*	*0.43*	*2.32*	*0.18*	*1.26*
Zinc plated case & brass tongue								
0748/001	**Universal**				**Weight 60g/2.1oz**			
METRIC (mm)	*85*	*22*	*66*	*17*	*9.5*	*56*	*6.5*	*38.0*
IMPERIAL (ins)	*3.35*	*0.87*	*2.6*	*0.67*	*0.37*	*2.2*	*0.26*	*1.50*
Zinc plated case & pressed steel tongue								
0750/002	**Universal**				**Weight 140g/5oz**			
METRIC (mm)	*126*	*27*	*101*	*20*	*13.5*	*75*	*5*	*50.5*
IMPERIAL (ins)	*4.96*	*1.06*	*3.98*	*0.79*	*0.53*	*2.95*	*0.2*	*1.99*
Zinc plated case & malleable iron tongue								
0752/001	**Universal**				**Weight 60g/2.1oz**			
METRIC (mm)	*76.5*	*26*	*60*	*16*	*8*	*50*	*7*	*30*
IMPERIAL (ins)	*3.00*	*1.02*	*2.36*	*0.63*	*0.32*	*1.97*	*0.28*	*1.18*
Zinc plated case & malleable iron tongue								
0752/002	**Universal**				**Weight 70g/2.5oz**			
METRIC (mm)	*76.5*	*26.0*	*60.0*	*16.0*	*8.0*	*50.0*	*7.0*	*30.0*
IMPERIAL (ins)	*3.00*	*1.02*	*2.36*	*0.63*	*0.32*	*1.97*	*0.28*	*1.18*
Stainless steel casing & tongue								
0754/001 **0754/002**	**Left hand (shown)** **Right hand**				**Weight 60g/2.1oz**			
METRIC (mm)	*83*	*22*	*66*	*17.5*	*9*	*54*	*6. 5*	*19*
IMPERIAL (ins)	*3.28*	*0.87*	*2.6*	*0.7*	*0.35*	*2.13*	*0.26*	*0.75*
Zinc plated case and pressed steel tongue								
0756/001 **0756/002**	**Left hand (shown)** **Right hand**				**Weight 70g/2.5oz**			
METRIC (mm)	*95*	*22*	*76.5*	*23.5*	*11*	*65*	*4.5*	*23*
IMPERIAL (ins)	*3.74*	*0.87*	*3*	*0.93*	*0.43*	*2.56*	*0.18*	*0.91*
Zinc plated case & malleable iron tongue								
0779/001	**Zinc plated striker plate**							

continued...

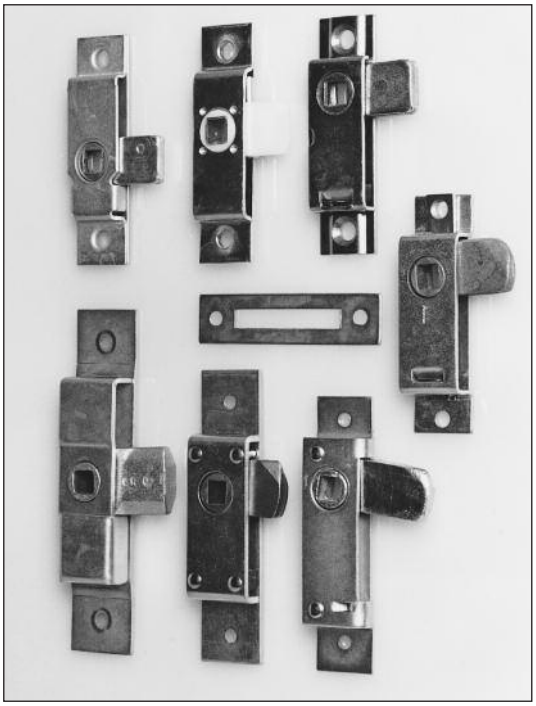

Top - 0748/001, 0125/001, 0754/001
Centre - 0779/001, 0746/003
Bottom - 0750/002, 0747/001, 0756/001

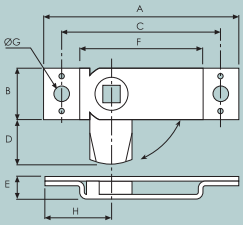

BUDGET LOCKS

All operated by 'T'-key or by 8 mm square drive.

	A	B	C	D	E	F	G	H
0744/601	**Universal**				**Weight 170g/6oz**			
METRIC (mm)	*125*	*28.0*	*102*	*18.0*	*12.5*	*77.0*	*6.00*	*62.0*
IMPERIAL (ins)	*4.92*	*1.10*	*4.02*	*0.71*	*0.49*	*3.03*	*0.24*	*2.44*
Zinc plated case & die-cast tongue								
0744/602	**Universal**				**Weight 110g/3.9oz**			
METRIC (mm)	*115*	*22.0*	*94.0*	*15.0*	*11.0*	*71.0*	*5.00*	*55.0*
IMPERIAL (ins)	*4.53*	*0.87*	*3.70*	*0.59*	*0.43*	*2.80*	*0.20*	*2.17*
Zinc plated case & die-cast tongue								
0744/604	**Universal**				**Weight 60g/2.1oz**			
METRIC (mm)	*85.0*	*22.0*	*67.0*	*14.0*	*8.50*	*54.0*	*6.20*	*43.5*
IMPERIAL (ins)	*3.35*	*0.87*	*2.64*	*0.55*	*0.34*	*2.13*	*0.24*	*1.71*
Zinc plated case & die-cast tongue								
0745/001	**Left Hand**				**Weight 70g/2.5oz**			
0745/002	**Right Hand**				**Weight 70g/2.5oz**			
METRIC (mm)	*78*	*20*	*65*	*10*	*10*	*52*	*5*	*30*
IMPERIAL (ins)	*3.07*	*0.79*	*2.56*	*0.39*	*0.39*	*2.05*	*0.20*	*1.18*
Zinc plated case & brass tongue								

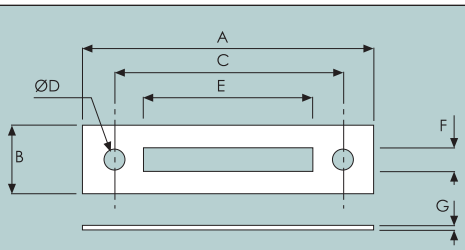

STRIKER PLATE

Zinc plated mild steel. For use with budget locks.

	A	B	C	D	E	F	G	H
0779/001					**Weight 9g/0.3oz**			
METRIC (mm)	*76.5*	*18.0*	*60.0*	*5.50*	*44.5*	*6.20*	*1.20*	
IMPERIAL (ins)	*3.01*	*0.71*	*2.36*	*0.22*	*1.75*	*0.24*	*0.05*	

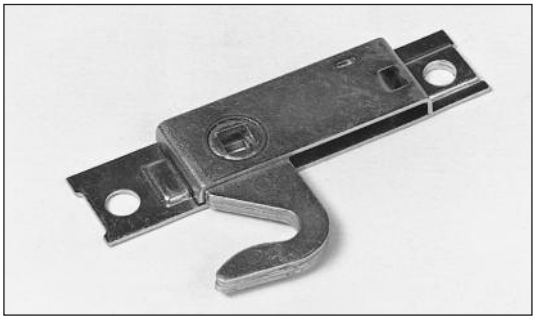

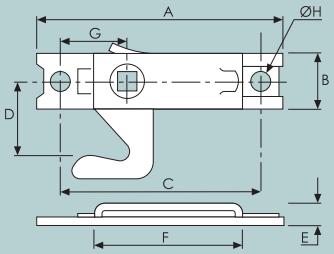

BUDGET LOCK

Hooked tongue.
Zinc plated and yellow passivated casing.
Pressed steel tongue.

	A	B	C	D	E	F	G	H
5589/200	**Left hand (shown)**				**Weight 100g/3.5oz**			
5589/201	**Right hand**							
METRIC (mm)	*112*	*25.4*	*94*	*34*	*9*	*69*	*33*	*8.5*
IMPERIAL (ins)	*4.41*	*1.00*	*3.70*	*1.34*	*0.35*	*2.72*	*1.30*	*0.34*

Tee Keys

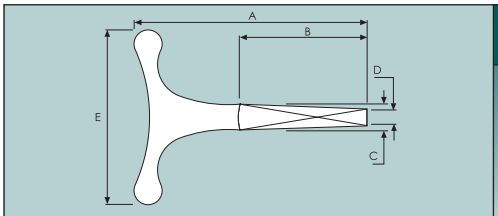

'T'-KEY

Zinc plated, steel.

	A	B	C	D	E	F	G	H
2257/001					**Weight 70g/2.5oz**			
METRIC (mm)	*83*	*45*	*9*	*6*	*62*			
IMPERIAL (ins)	*3.27*	*1.77*	*0.35*	*0.24*	*2.44*			

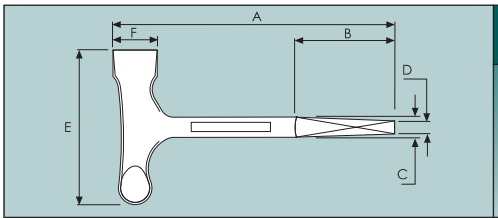

'T'-KEY

Zinc plated, steel.
Screwdriver head one end for use with floor -trap fasteners.

	A	B	C	D	E	F	G	H
2257/003					**Weight 110g/3.9oz**			
METRIC (mm)	*125*	*45*	*9*	*6*	*70*	*20*		
IMPERIAL (ins)	*4.92*	*1.77*	*0.35*	*0.24*	*2.76*	*0.79*		

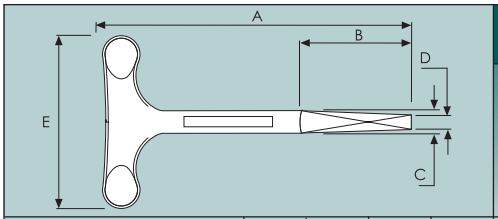

'T'-KEY

Zinc plated, steel.

	A	B	C	D	E	F	G	H
2257/004					**Weight 120g/4.2oz**			
METRIC (mm)	*125*	*45*	*9*	*6*	*70*			
IMPERIAL (ins)	*4.92*	*1.77*	*0.35*	*0.24*	*2.76*			

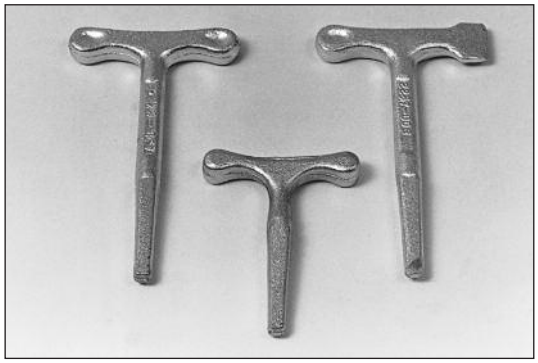

Left - 2257/004 *Centre - 2257/001* *Right - 2257/003*

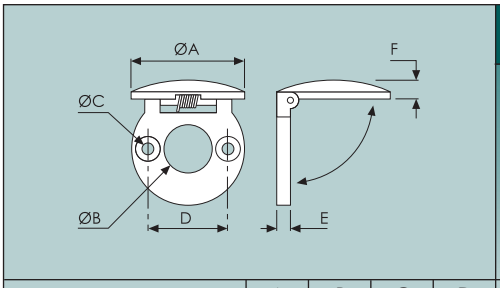

SPRING LIDDED ESCUTCHEON

Polished chrome on die cast body.

	A	B	C	D	E	F	G	H
0130/001	**Chrome finish**				**Weight 20g/0.7oz**			
METRIC (mm)	*27.6*	*12.7*	*3.18*	*20*	*3.6*	*4*		
IMPERIAL (ins)	*1.09*	*0.5*	*0.13*	*0.79*	*0.14*	*0.16*		

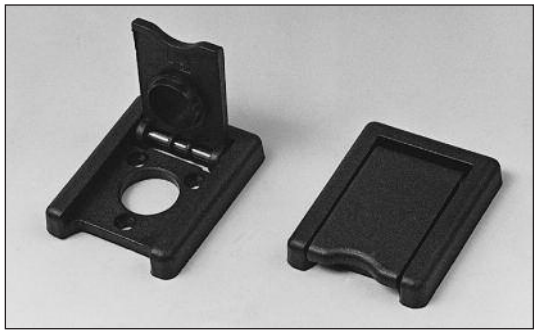

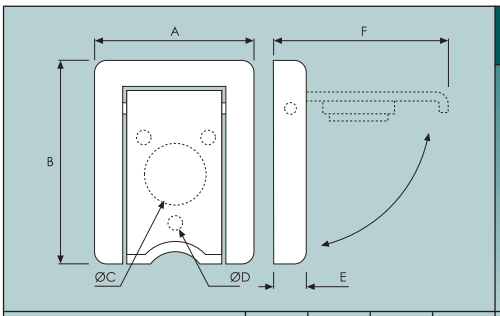

SPRING LIDDED ESCUTCHEON

Black plastic.

	A	B	C	D	E	F	G	H
0130/003					**Weight 20g/0.7oz**			
METRIC (mm)	*40*	*50*	*16*	*3.3*	*8.5*	*43.5*		
IMPERIAL (ins)	*1.58*	*1.97*	*0.63*	*0.13*	*0.34*	*1.71*		

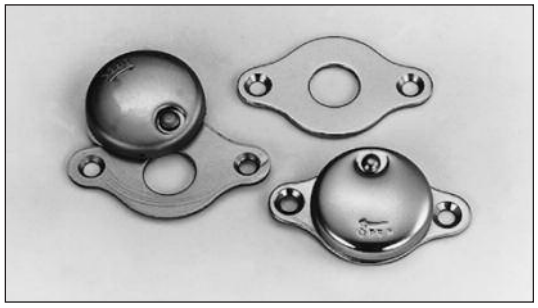

Left - 2296/002

Right Top - 2295/001
Right Bottom - 2296/001

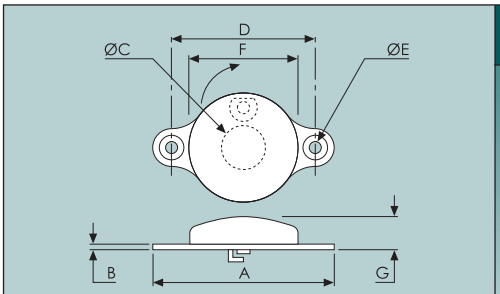

SWIVEL LIDDED ESCUTCHEON

	A	B	C	D	E	F	G	H
2295/001	**Base only**				**Weight 10g/0.4oz**			
2296/001	**Chrome on brass**				**Weight 20g/0.7oz**			
2296/002	**Stainless steel**				**Weight 20g/0.7oz**			
METRIC (mm)	*49*	*1.6*	*12.5*	*38*	*4*	*30*	*6.5*	
IMPERIAL (ins)	*1.93*	*0.06*	*0.5*	*1.5*	*0.16*	*1.18*	*0.26*	

Compartment Locks

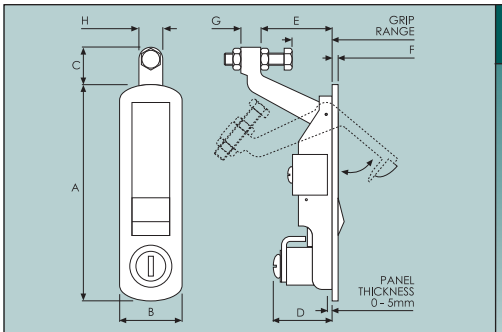

COMPRESSION LATCH

Zinc die-cast body with a zinc plated steel rear clamp plate & screw.
Polished chrome or black powder coat finish.
Suitable for panels upto 5mm thick.
Other key combinations available on request.

	A	B	C	D	E	F	G	H
1191/13001	**Locking/black**				**Weight 250g/8.8oz**			
	1-25mm grip range							
1191/13051	**Non-locking/black**				**Weight 250g/8.8oz**			
	1 -25mm grip range							
1191/13002	**Locking/chrome**				**Weight 250g/8.8oz**			
	1-25mm grip range							
1191/13052	**Non-locking/chrome**				**Weight 250g/8.8oz**			
	1 -25mm grip range							
METRIC (mm)	*109*	*31.0*	*16.0*	*32.0*	*35.0*	*2.50*	*10.0*	*12.5*
IMPERIAL (ins)	*4.29*	*1.22*	*0.63*	*1.26*	*1.38*	*0.10*	*0.39*	*0.49*

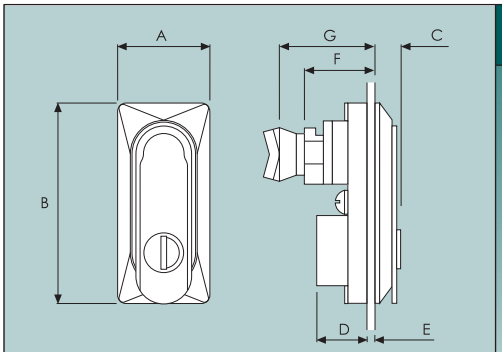

SEALED COMPRESSION LATCH

Black polyamide casing & handle with a zinc die-cast shaft. Stainless steel shuttered locking cylinder with 1 key supplied.
Supplied with a zinc plated, pressed steel clamp plate.
Integral PUR foam seal - rated to IP 65.
90° rotation to operate with 3mm compression on closure.
* Dimension G refers to cam (not supplied) specification, refer below for details.
25mm x 70mm cut-out required.

NB. cam supplied seperately, refer below for details.

	A	B	C	D	E	F	G	H
1152/001	**Keyed random**				**Weight 147g/5.2oz**			
1152/002	**Keyed alike**				**Weight 147g/5.2oz**			
METRIC (mm)	*36*	*70*	*9.0*	*22.5*	*2.0*	*28*	*	
IMPERIAL (ins)	*1.42*	*2.76*	*0.35*	*0.89*	*0.08*	*1.10*		

• CAMS • CAMS • CAMS • CAMS • CAMS • CAMS • CAMS • CAMS • CAMS • CAMS • CAMS • CAMS •							
DIM G	**PART NUMBER**	**DIM G**	**PART NUMBER**	**DIM G**	**PART NUMBER**	**DIM G**	**PART NUMBER**
14	9790/014	16	9790/012	18	9790/010	20	9790/008
23	9790/005	24	9790/004	26	9790/002	28	9790/000
30	9790/102	32	9790/104	34	9790/106	35	9790/107
36	9790/108	38	9790/110	40	9790/112		

Other cams sizes available on request, subject to minimum order quantities.

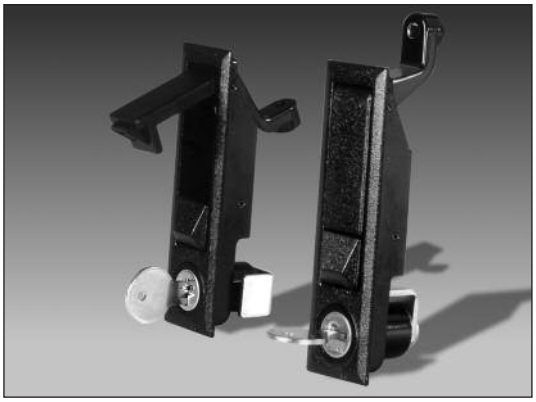

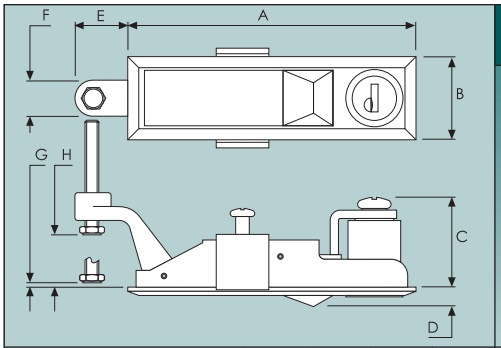

'TRIGGER' LATCH

Push button action with the facility to adjust compression force via a threaded striker bolt.
A black, powder coated, zinc-alloy die cast body with zinc plated internal components.
Supplied with a single key along with a zinc plated steel clamp plate.
Panel thickness range: 0.8mm min. to 8mm max.

	A	B	C	D	E	F	G	H
1192/0534					**Weight 220g/7.8oz**			
METRIC (mm)	*104*	*30*	*33*	*6*	*17*	*12.7*	*3.2*	*19*
IMPERIAL (ins)	*4.10*	*1.18*	*1.30*	*0.24*	*0.67*	*0.50*	*0.13*	*0.75*

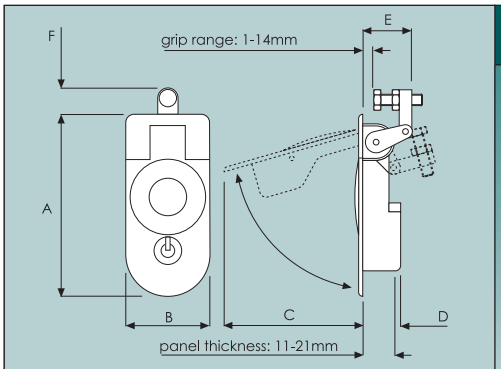

SEALED COMPRESSION LATCH

Zinc, die-cast body with black, powder coated finish.
Lockable with two keys supplied. Push button release.
Zinc plated steel clamp plate supplied.
Grip range: 1mm to 14mm.
For use in NEMA 4 & IP66 applications.
Optional gasket available.

	A	B	C	D	E	F	G	H
9530/0523					**Weight 370g/13.1oz**			
METRIC (mm)	*110*	*50*	*85*	*22*	*29*	*15*		
IMPERIAL (ins)	*4.33*	*1.97*	*3.35*	*0.87*	*1.14*	*0.59*		
9530/0520	**Gasket**							

Compartment Locks

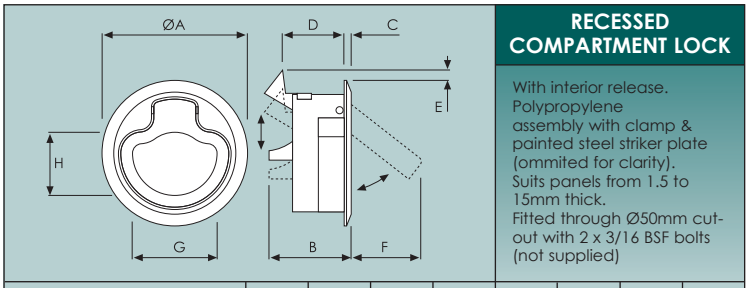

RECESSED COMPARTMENT LOCK

With interior release.
Polypropylene assembly with clamp & painted steel striker plate (ommited for clarity).
Suits panels from 1.5 to 15mm thick.
Fitted through Ø50mm cut-out with 2 x 3/16 BSF bolts (not supplied)

	A	B	C	D	E	F	G	H
0810/001 Black					**Weight 60g/2.1oz**			
0810/002 White								
METRIC (mm)	*61.0*	*38.0*	*3.00*	*27.0*	*4.00*	*29.0*	*32.0*	*23.0*
IMPERIAL (ins)	*2.40*	*1.50*	*0.12*	*1.06*	*0.16*	*1.14*	*1.26*	*0.91*

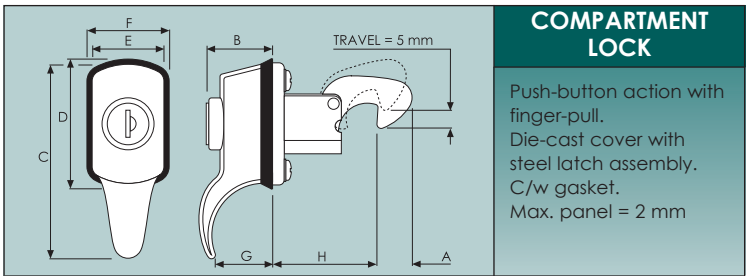

COMPARTMENT LOCK

Push-button action with finger-pull.
Die-cast cover with steel latch assembly.
C/w gasket.
Max. panel = 2 mm

	A	B	C	D	E	F	G	H
5310/0100 Chrome face-plate					**Weight 210g/7.4oz**			
5310/0200 Black face-plate								
METRIC (mm)	*13*	*25*	*74*	*51*	*26.5*	*32*	*18*	*40*
IMPERIAL (ins)	*0.51*	*0.98*	*2.91*	*2.01*	*1.04*	*1.26*	*0.71*	*1.58*

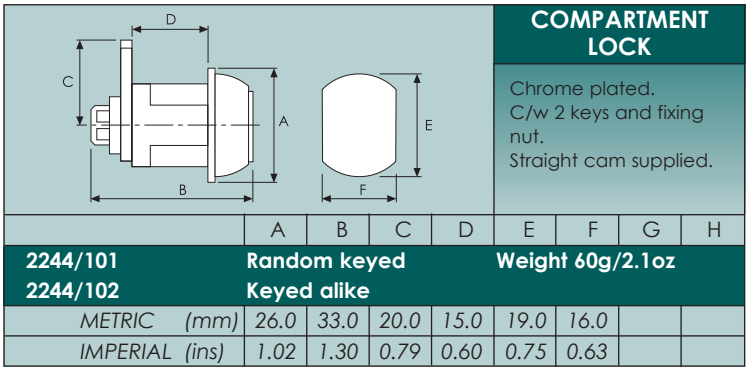

COMPARTMENT LOCK

Chrome plated.
C/w 2 keys and fixing nut.
Straight cam supplied.

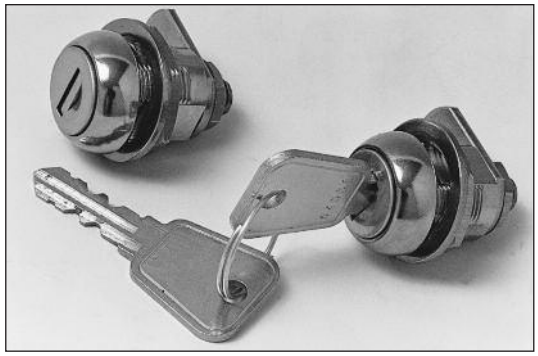

	A	B	C	D	E	F	G	H
2244/101 Random keyed					**Weight 60g/2.1oz**			
2244/102 Keyed alike								
METRIC (mm)	*26.0*	*33.0*	*20.0*	*15.0*	*19.0*	*16.0*		
IMPERIAL (ins)	*1.02*	*1.30*	*0.79*	*0.60*	*0.75*	*0.63*		

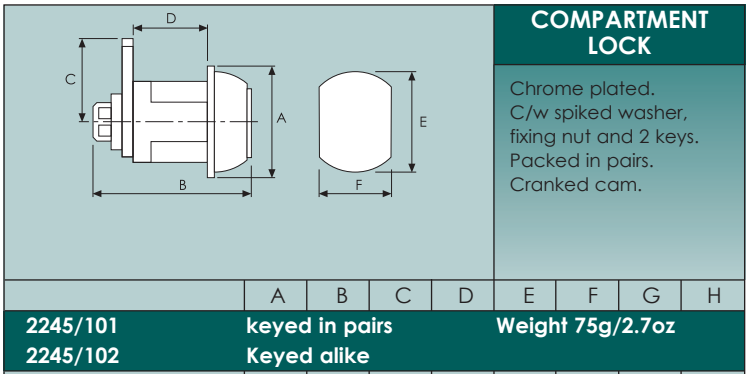

COMPARTMENT LOCK

Chrome plated.
C/w spiked washer, fixing nut and 2 keys.
Packed in pairs.
Cranked cam.

	A	B	C	D	E	F	G	H
2245/101 keyed in pairs					**Weight 75g/2.7oz**			
2245/102 Keyed alike								
METRIC (mm)	*25.0*	*34.0*	*36.0*	*12.0*	*19.0*	*16.0*		
IMPERIAL (ins)	*1.00*	*1.34*	*1.42*	*0.47*	*0.75*	*0.63*		

Quarter Turn Locks

Brochure listing all available configurations and part numbers available on request.

QUARTER TURN LOCKS - POTENTIAL CONFIGURATIONS

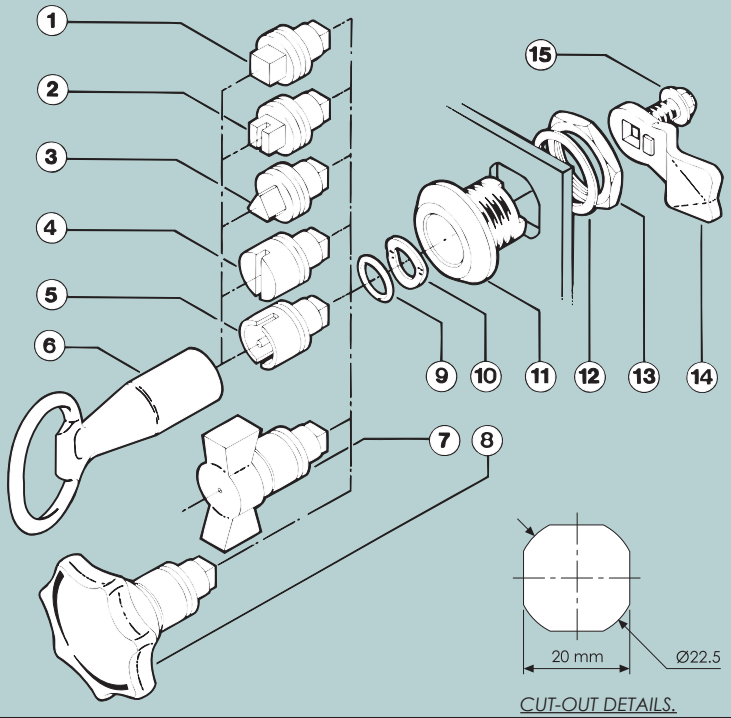

CUT-OUT DETAILS.

1.	*8 mm Square.*	**2.**	*8 mm Square slotted.*
3.	*7 & 8 mm Triangular.*	**4.**	*2 x 4 mm deep slot.*
5.	*3 & 5 mm Double bit.*	**6.**	*Key to suit insert.*
7.	*Wing-knob.*	**8.**	*Star handle.*
9.	*'O' ring.*	**10.**	*Wavewasher.*
11.	*Housing.*	**12.**	*External seal.*
13.	*Nut or earth-nut.*	**14.**	*Cam.*
15.	*Screw.*		

Inserts 1 to 5 are in a variety of finishes which include chrome plate, black powder-coating and black polyamide.

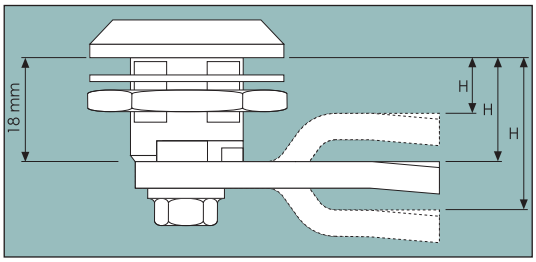

For suitable cam please contact us with dimension H.

• FINISHES • FINISHES • FINISHES • FINISHES • FINISHES •

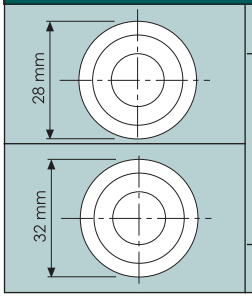

ZINC-ALLOY, DIE-CAST.	ZINC-ALLOY, DIE-CAST.	POLYAMIDE
CHROME PLATED	BLACK POWDER-COATED	BLACK

With die-cast body only, dimension A is available 30mm, 36mm, 40mm, 50mm and 60mm.

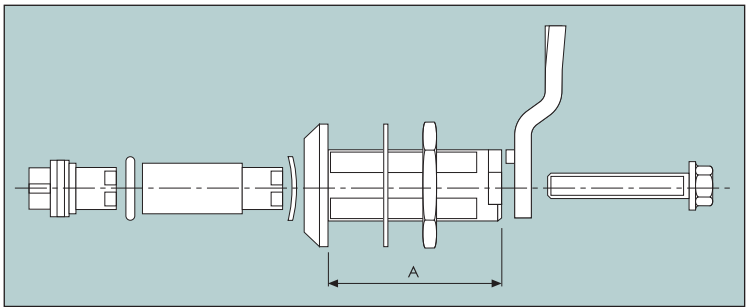

Sliding Door Locks

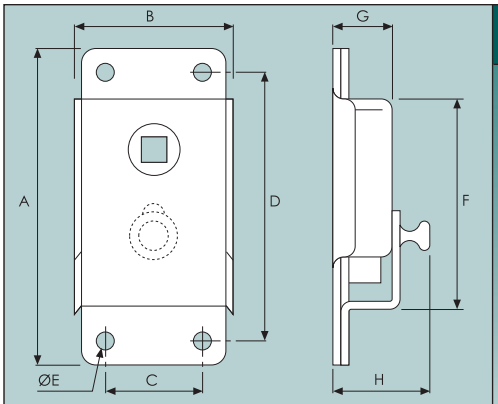

SLIDING DOOR LOCK

Zinc plated and gold passivated.

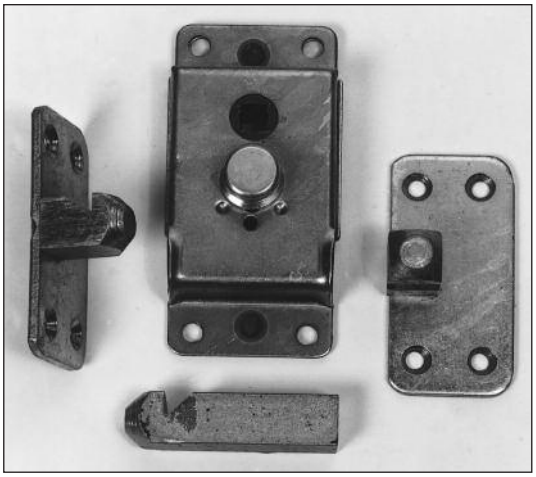

	A	B	C	D	E	F	G	H
2092/005	**Locking**				**Weight 310g/11oz**			
2092/006	**Non-locking**				**Weight 300g/10.6oz**			
METRIC (mm)	*106*	*52*	*34.5*	*92*	*6.5*	*70*	*21*	*31*
IMPERIAL (ins)	*4.17*	*2*	*1.36*	*3.62*	*0.26*	*2.76*	*0.83*	*1.22*

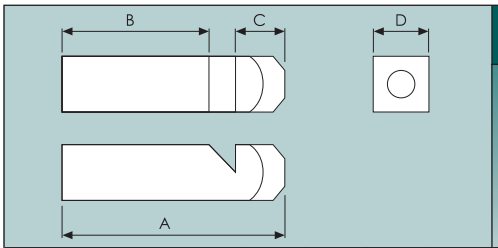

SQUARE SECTION STRIKER PEG

Universal.
Zinc plated and gold passivated.

	A	B	C	D	E	F	G	H
2092/004					**Weight 120g/4.2oz**			
METRIC (mm)	*64*	*45*	*11*	*16*				
IMPERIAL (ins)	*2.52*	*1.77*	*0.43*	*0.63*				

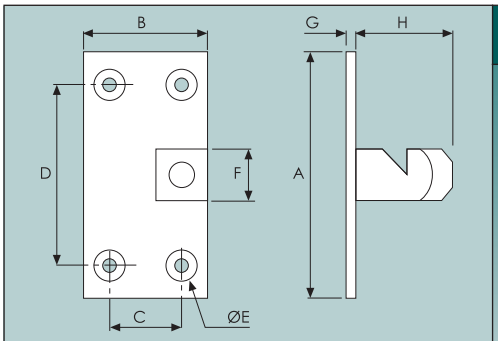

STRIKER

Zinc plated and gold passivated.

	A	B	C	D	E	F	G	H
2092/003	**Left hand (shown)**				**Weight 110g/3.9oz**			
2092/013	**Right hand**							
METRIC (mm)	*77*	*40*	*20*	*55*	*5.5*	*16*	*3*	*24*
IMPERIAL (ins)	*3.03*	*1.58*	*0.79*	*2.17*	*0.22*	*0.63*	*0.12*	*0.95*

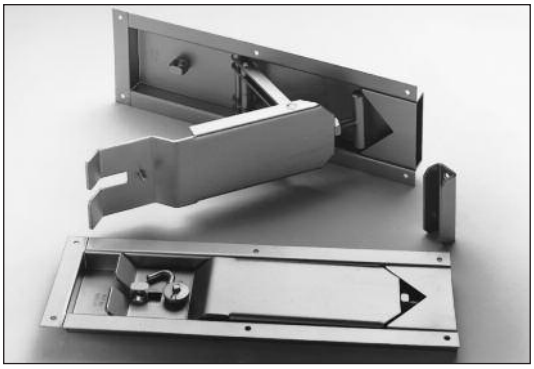

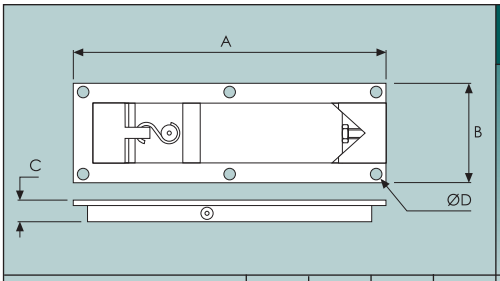

SLIDING DOOR LOCK

Pressed steel.
Zinc plated and gold passivated.

	A	B	C	D	E	F	G	H
3003/002					**Weight 1.6kg/3.5lb**			
METRIC (mm)	*343*	*114*	*20*	*5*				
IMPERIAL (ins)	*13.5*	*4.5*	*0.8*	*0.2*				

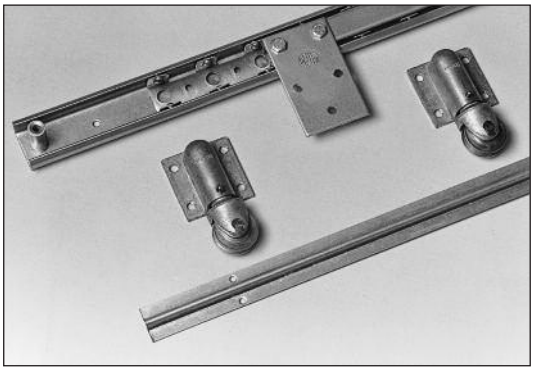

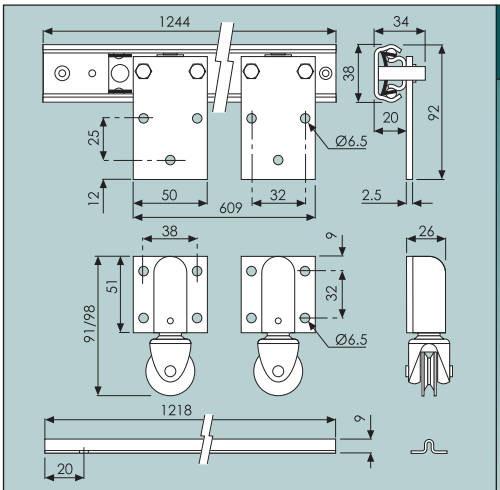

VANGUARD SLIDING DOOR GEAR

All dimensions in mm.
36kg (79lb) max.load with bottom guides in place.

2063/001	**Sliding door top runner**
	with ball bearing action *1218mm (48") track for 610mm (24") door.* *Galvanised finish.*
2063/002	**Bottom track**
	Galvanised finish.
2064/001	**Bottom roller guide**
	Spring loaded, Die cast.

Rotor Latches

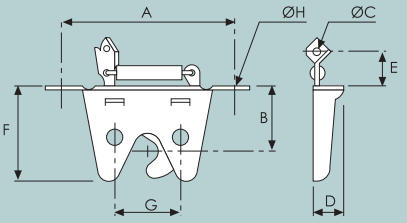

CLAW LATCH (ANTI-BURST TYPE)

Zinc plated and gold passivated. Top flange fitting.

	A	B	C	D	E	F	G	H
0931/001 With cover					**Weight 120g/4.2oz**			
0931/002 Without cover								
5589/223 Rubber cover								
METRIC (mm)	*81.5*	*27.5*	*3.00*	*19.0*	*21.0*	*46.4*	*25.4*	*7.00*
IMPERIAL (ins)	*3.21*	*1.08*	*0.12*	*0.75*	*0.83*	*1.83*	*1.00*	*0.28*

Left-0931/003 *Top-0931/001* *Bottom- 0931/005* *Right- 5589/223*

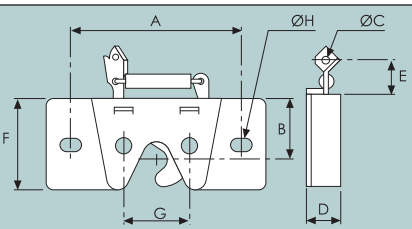

CLAW LATCH (ANTI-BURST TYPE)

Zinc plated and gold passivated.
Side flange fitting.

	A	B	C	D	E	F	G	H
0931/003					**Weight 150g/5.3 oz**			
METRIC (mm)	*76*	*27.5*	*4.0*	*19*	*26*	*43*	*25*	*7*
IMPERIAL (ins)	*2.99*	*1.08*	*0.16*	*0.75*	*1.02*	*1.69*	*0.98*	*0.28*

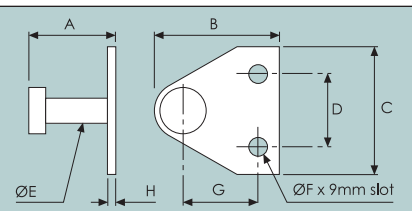

PIN STRIKER

Zinc plated and gold passivated to suit 0931/001, 002 and 003.

	A	B	C	D	E	F	G	H
0931/005					**Weight 90g/3.2oz**			
METRIC (mm)	*35*	*52*	*52*	*32*	*12.7*	*5.5*	*32*	*3.5*
IMPERIAL (ins)	*138*	*2.05*	*2.05*	*1.26*	*0.5*	*0.22*	*1.26*	*0.14*

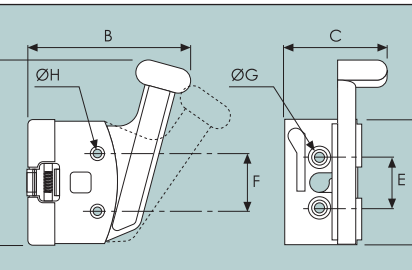

'ROLL-OVER' ROTOR LATCH

Pressed steel casing with a black ferritic finish & a black plastic handle.
Supplied with face fixing plate.
For use with 9301/101 striker pins.

	A	B	C	D	E	F	G	H
9310/010 Left hand					**Weight 380g/13.4oz**			
9310/011 Right hand (shown)								
METRIC (mm)	*78*	*96*	*63*	*80*	*31.5*	*38.1*	*6.3*	*5.3*
IMPERIAL (ins)	*3.07*	*3.78*	*2.48*	*3.15*	*1.24*	*1.50*	*0.25*	*0.21*

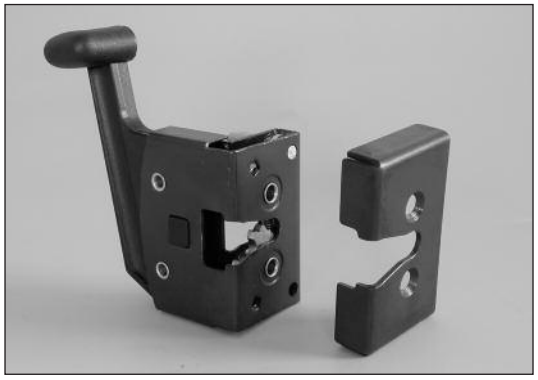

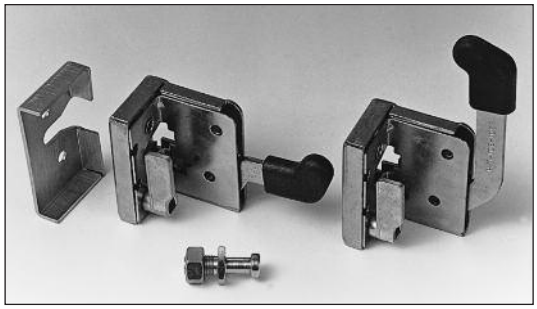

Left - 9301/011 *Centre - 9301/015* *Right - 9301/001*
Bottom - 9301/101

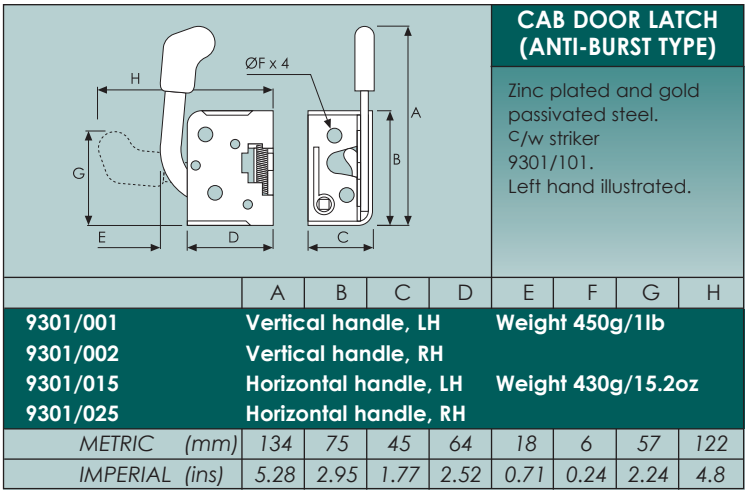

CAB DOOR LATCH (ANTI-BURST TYPE)

Zinc plated and gold passivated steel.
C/w striker 9301/101.
Left hand illustrated.

	A	B	C	D	E	F	G	H
9301/001	**Vertical handle, LH**				**Weight 450g/1lb**			
9301/002	**Vertical handle, RH**							
9301/015	**Horizontal handle, LH**				**Weight 430g/15.2oz**			
9301/025	**Horizontal handle, RH**							
METRIC (mm)	*134*	*75*	*45*	*64*	*18*	*6*	*57*	*122*
IMPERIAL (ins)	*5.28*	*2.95*	*1.77*	*2.52*	*0.71*	*0.24*	*2.24*	*4.8*

*Conforms to **static strength requirements of ECE 11** paragraphs 5.2.1 and 5.2.2.*

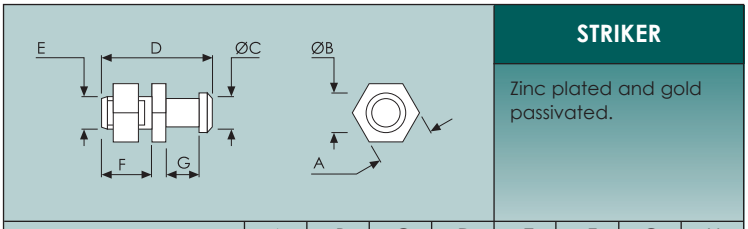

STRIKER

Zinc plated and gold passivated.

	A	B	C	D	E	F	G	H
9301/101					**Weight 50g/1.8oz**			
METRIC (mm)	*19*	*14*	*9*	*42*	*M12*	*18*	*14*	
IMPERIAL (ins)	*0.75*	*0.55*	*0.35*	*1.65*		*0.71*	*0.55*	

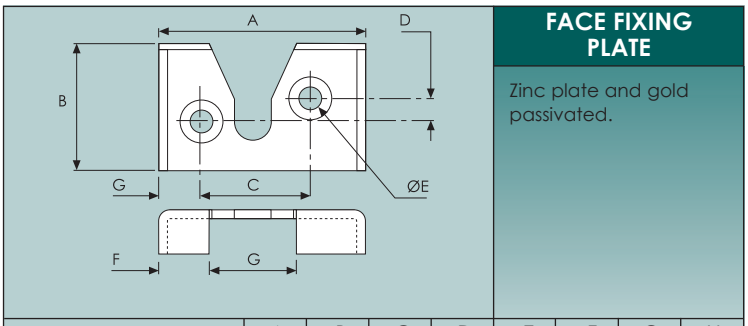

FACE FIXING PLATE

Zinc plate and gold passivated.

	A	B	C	D	E	F	G	H
9301/011	**Left hand (shown)**				**Weight 100g/3.5oz**			
9301/012	**Right hand**							
METRIC (mm)	*81*	*48*	*39*	*8*	*7*	*24*	*25*	
IMPERIAL (ins)	*3.19*	*1.9*	*1.54*	*0.32*	*0.28*	*0.95*	*0.98*	

Push Button Handles

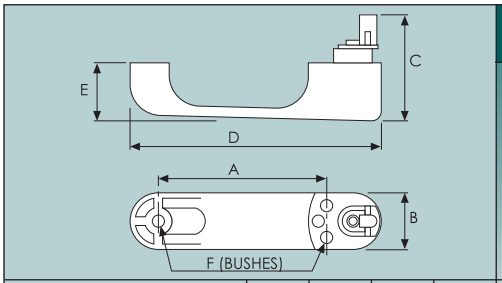

EXTERIOR PUSH BUTTON HANDLE

Black, glass reinforced polyester with a zinc plated, mild-steel cam. Can be used with "9301" latches. Striker screw not tightened to allow selection of striker position.

	A	B	C	D	E	F	G	H
9300/001	**keyed in pairs**				**Weight 220g/7.8oz**			
9300/002	**Keyed alike**							
9300/003	**Non-locking**							
METRIC (mm)	*120*	*38*	*68*	*181*	*36*	*M6*		
IMPERIAL (ins)	*4.72*	*1.5*	*2.68*	*7.13*	*1.42*			
9300/006	**Small neoprene gasket**							
9300/016	**Large neoprene gasket**							

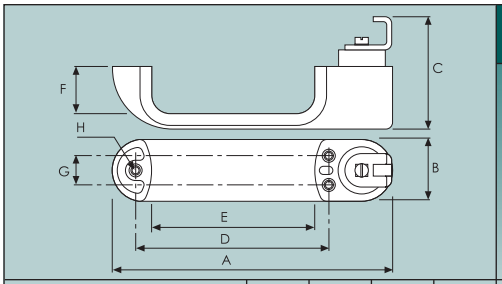

EXTERIOR PUSH BUTTON HANDLE

Black, glass reinforced plastic with zinc-plated mild-steel cam.
Can be used with "9301" latches.

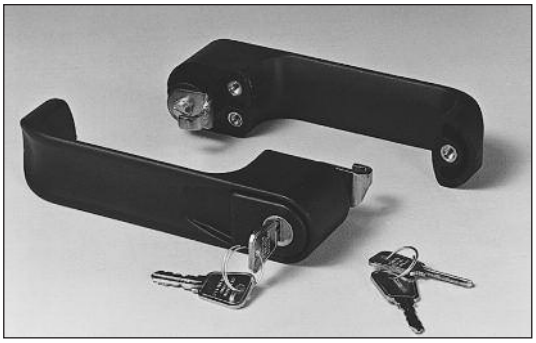

	A	B	C	D	E	F	G	H
9304/001	**keyed in pairs**				**Weight 180g/6.4oz**			
9304/002	**Keyed alike**							
METRIC (mm)	*175*	*38*	*68*	*120*	*101*	*28*	*18*	*M6*
IMPERIAL (ins)	*6.89*	*1.50*	*2.68*	*4.72*	*3.98*	*1.10*	*0.71*	

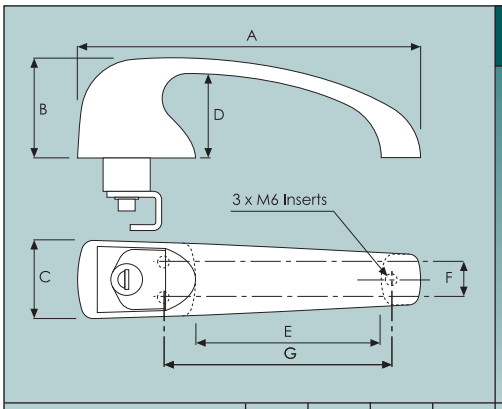

PUSH BUTTON HANDLE

Black polyropylene body with chrome plated, diecast button & lock barrel.
Supplied with 2 keys & 2 gaskets.

	A	B	C	D	E	F	G	H
9304/2000	**Keyed 64001**				**Weight 280g/9.9oz**			
9304/2001	**Keyed in pairs**							
METRIC (mm)	*176*	*48.0*	*39.0*	*39.0*	*96.0*	*18.0*	*117*	
IMPERIAL (ins)	*6.93*	*1.89*	*1.54*	*1.54*	*3.78*	*0.71*	*4.61*	

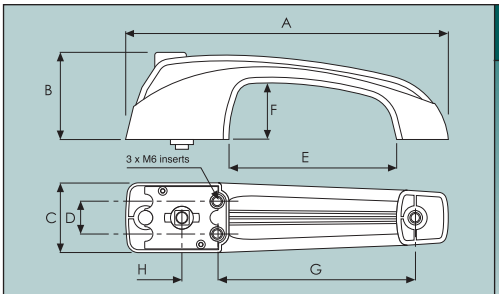

PUSH BUTTON HANDLE

Glass reinforced nylon handle with brass threaded inserts. Locking with 2 keys supplied. Installation via 3 M6 bolts (not supplied).

	A	B	C	D	E	F	G	H
9500/5104	**Keyed alike**				**Weight 240g/8.5oz**			
9500/5105	**Keyed in pairs**				**Weight 240g/8.5oz**			
METRIC (mm)	*190*	*52.0*	*41.0*	*19.0*	*100*	*38.0*	*120*	*22.5*
IMPERIAL (ins)	*7.48*	*2.05*	*1.61*	*0.75*	*3.94*	*1.50*	*4.72*	*0.89*

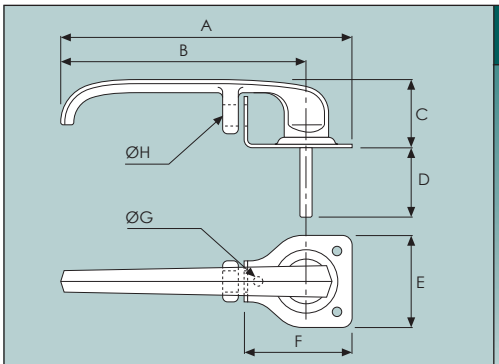

PADLOCKABLE LEVER HANDLE

Highly polished 316 stainless steel.
360° rotation on lever.

	A	B	C	D	E	F	G	H
5589/409					**Weight 375g/13.2oz**			
METRIC (mm)	*184*	*152*	*42.0*	*82.0*	*54.0*	*67.0*	*6.30*	*13.3*
IMPERIAL (ins)	*7.24*	*5.98*	*1.65*	*3.23*	*2.13*	*2.64*	*0.25*	*0.52*

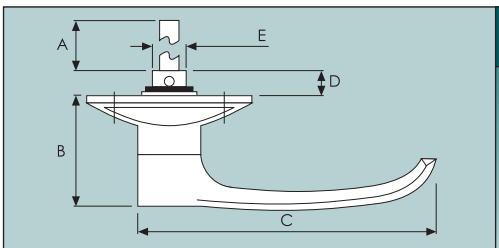

LEVER HANDLE

360° rotation, no stops and not spring loaded. Matching 'T' handle - 5224. (see page d34).

	A	B	C	D	E	F	G	H
4222	**Descriptions below**				**Weight 240g/8.5oz**			
METRIC (mm)	*100*	*45*	*113*	*9*	*15*			
IMPERIAL (ins)	*3.94*	*1.77*	*4.45*	*0.35*	*0.59*			
4222/606	**Fixing gasket**							

PART NUMBER	FINISH	HOLES CENTRES	KEYED
4222/101	*Chrome plate*	*38mm (1.5")*	*Non*
4222/202	*Chrome plate*	*38mm (1.5")*	*Random*
4222/303	*Chrome plate*	*38mm (1.5")*	*Alike*
4222/404	*Chrome plate*	*44.5mm (1.75")*	*Non*
4222/414	*Black epoxy*	*44.5mm (1.75")*	*Non*
4222/505	*Chrome plate*	*44.5mm (1.75")*	*Random*
4222/515	*Black epoxy*	*44.5mm (1.75")*	*Random*
4222/707	*Chrome plate*	*44.5mm (1.75")*	*Alike*

Walsall: 01922 471000 Heywood: 01706 692110 Romsey: 01794 525870

www.albert-jagger.co.uk

Lever Handles

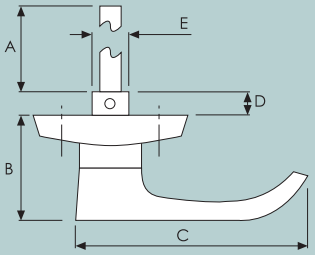

LEVER HANDLE

Chrome plated.
8mm follower.
38mm (1.5") hole centres.

	A	B	C	D	E	F	G	H
5589/365	**Locking, random keyed.**							
5589/370	**Non-locking (concealed fixing)**							
METRIC (mm)	*105*	*41*	*115*	*10*	*14*			
IMPERIAL (ins)	*4.13*	*1.61*	*4.53*	*0.4*	*0.55*			

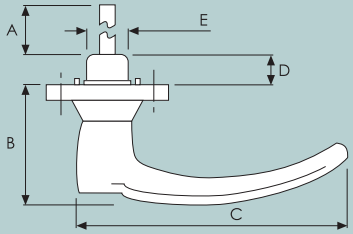

LEVER HANDLE

Chrome plated, 8mm follower c/w fixing gasket. Locking (4 station) with 2 keys (FS series). 360° rotation, no stops and not spring loaded.
Fixing hole centres @ 44.5mm.

	A	B	C	D	E	F	G	H
4243/002					**Weight 350g/12.3oz**			
METRIC (mm)	*112*	*56.0*	*131*	*14.0*	*18.0*			
IMPERIAL (ins)	*4.41*	*2.21*	*5.16*	*0.55*	*0.71*			

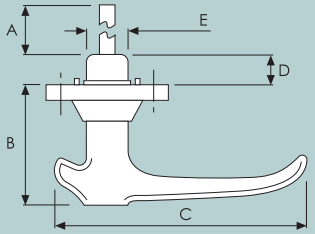

LEVER HANDLE

Chrome plated, 8mm follower, c/w fixing gasket. Locking versions with 4 stations and random keyed. 360° rotation, no stops and not spring loaded.

2280/001

	A	B	C	D	E	F	G	H
2280/001	**38mm centres**				**Weight 280g/10oz**			
	Non-locking							
2280/002	**38mm centres**				**Weight 280g/10oz**			
	locking							
2280/003	**44.5mm centres**				**Weight 290g/10.2oz**			
	locking							
METRIC (mm)	*112*	*52*	*115*	*7*	*16*			
IMPERIAL (ins)	*4.41*	*2.05*	*4.53*	*0.28*	*0.63*			

4229/001

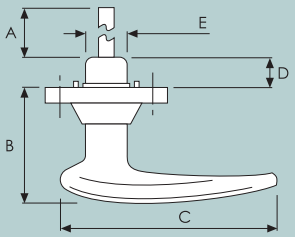

LEVER HANDLE

Chrome plated, 8mm follower c/w fixing gasket.
360° rotation, no stops and not spring loaded.
Locking versions with 4 stations.

	A	B	C	D	E	F	G	H
4229/001	**44.5mm centres**				**Weight 300g/10.6oz**			
	Non-locking							
4229/002	**38mm centres**				**Weight 310g/11oz**			
	locking, random keys							
4229/003	**44.5mm centres**				**Weight 310g/11oz**			
	locking, random keys							
4229/401	**44.5mm centres**				**Weight 310g/11oz**			
	locking, keyed alike							
METRIC (mm)	*115*	*52*	*97*	*4*	*16*			
IMPERIAL (ins)	*4.53*	*2.05*	*3.82*	*0.16*	*0.63*			

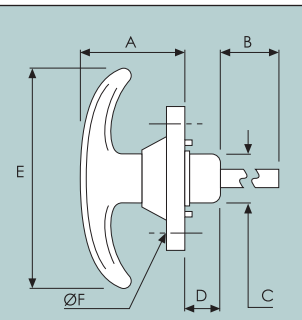

'T'-HANDLE

Chrome plated, c/w fixing gasket.
Locking with 2 keys (random). 44.5mm (1.75") centres.
360° rotation, no stops and not spring loaded.

	A	B	C	D	E	F	G	H
4218/001					**Weight 260g/9.2oz**			
METRIC (mm)	*40*	*110*	*18*	*17*	*94*	*5*		
IMPERIAL (ins)	*1.57*	*4.33*	*0.71*	*0.67*	*3.7*	*0.2*		

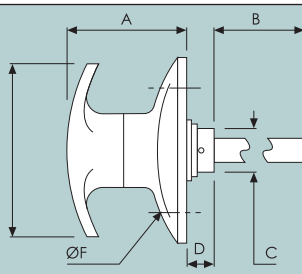

'T'-HANDLE

Chrome plated.
Locking with 2 keys (64001). 38mm (1.5") hole centres.
360° rotation, no stops and not spring loaded.

	A	B	C	D	E	F	G	H
4223/101					**Weight 230g/8oz**			
METRIC (mm)	*43*	*100*	*15*	*10*	*60*	*5*		
IMPERIAL (ins)	*1.69*	*3.94*	*0.59*	*0.39*	*2.36*	*0.2*		
4222/606	**Fixing gasket**							

Tee Handles

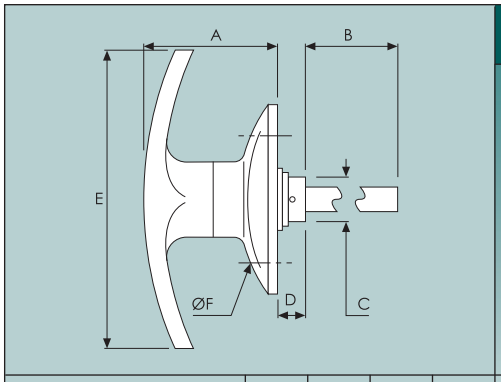

'T'-HANDLE

5224 - 360° rotation.
For matching lever handle refer 4222 range on page d31.

	A	B	C	D	E	F	G	H
5224/	**For full description**				**Weight 250g/8.8oz**			
METRIC (mm)	*45*	*100*	*15*	*9*	*101*	*5*		
IMPERIAL (ins)	*1.77*	*3.94*	*0.59*	*0.35*	*3.98*	*0.2*		
4222/606	**Fixing gasket**							

PART NUMBER	FINISH	HOLE CENTRES	KEYED
5224/001	*Chrome*	*44.5mm (1.75")*	*Random*
5224/002	*Chrome*	*44.5mm (1.75")*	*Alike*
5224/006	*Black*	*44.5mm (1.75")*	*Random*

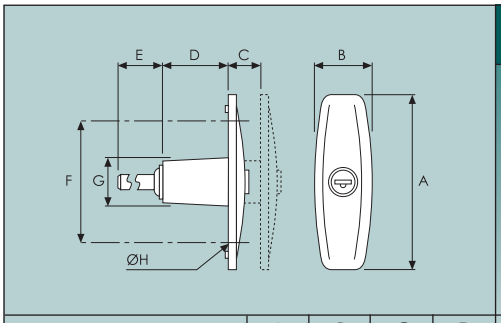

POP-UP 'T' HANDLE

Black powder coating on die-cast base.
Right hand indicates a clockwise rotation to open.
See TRI/MARK range for further details.
Standard 8mm spindle.
For cams refer page d38.

	A	B	C	D	E	F	G	H
9500/8101	**LH. 90° rotation.**				**Weight 520g/1.2lb**			
9500/8102	**RH. 90° rotation.**				**Weight 520g/1.2lb**			
9500/8121	**RH. 160° rotation.**				**Weight 520g/1.2lb**			
METRIC (mm)	*108*	*34*	*13*	*43.7*	*45.2*	*68.9*	*27.4*	*5.5*
IMPERIAL (ins)	*4.25*	*1.34*	*0.51*	*1.72*	*1.78*	*2.71*	*1.08*	*0.22*

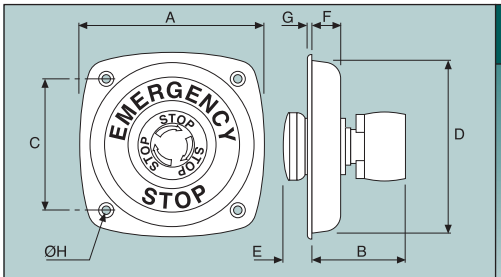

EMERGENCY STOP SWITCH

Black, glass reinforced, recessed dish with a highly visible red stop switch.
The switch is IP 65 rated & immediately breaks the circuit when pressed (turn to reset).
Suitable for 12 - 24 v AC/DC & tested to make or break at 11 amps, at 440 V.A.C, with thermal current rating of 16 amps.

	A	B	C	D	E	F	G	H
1201/001					**Weight 100g/3.5oz**			
METRIC (mm)	*126*	*58*	*90*	*108*	*11*	*20*	*3*	*5.5*
IMPERIAL (ins)	*4.96*	*2.28*	*3.54*	*4.25*	*0.43*	*0.79*	*0.12*	*0.22*

Left-3202/001 & 004 Centre-5589/353 Right-4212/002

NB. 4212 & 3202, fixing holes in flange. 5589, fixing holes in pan. 4212 & 5589 are universal (ie. not handed)

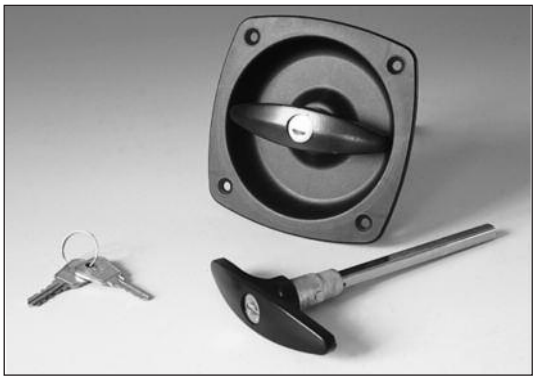

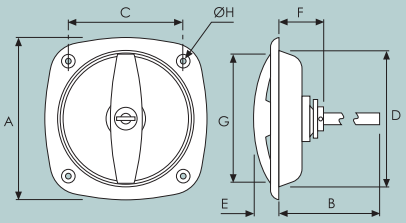

RECESSED 'T' HANDLE

Die-cast chrome plated handle with black powder coated dish.

	A	B	C	D	E	F	G	H
5589/576 **5589/375** **5589/378**	**Locking, random** **Non-locking** **Locking, alike**				**Weight 520g/1.2kg**			
METRIC (mm)	*125*	*145*	*90.0*	*105*	*15.0*	*42.0*	*101*	*4.75*
IMPERIAL (ins)	*4.92*	*5.71*	*3.54*	*4.13*	*0.59*	*1.65*	*3.98*	*0.19*

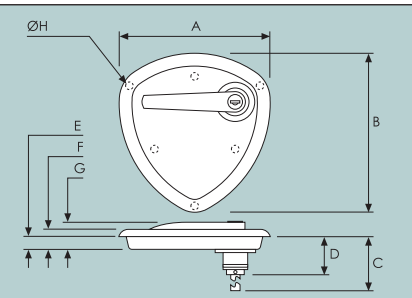

DISH HANDLES

Chrome plated handle with black powder coated dish. 8mm spindle.
Locking versions c/w 2 keys.
4212 dish illustrated, cut-out details available on request.

	A	B	C	D	E	F	G	H
4212/001 **4212/002** **4212/707**	**Non-locking** **Locking (Random keyed)** **Locking (Keyed alike)**				**Weight 460g/1lb**			
METRIC (mm)	*165*	*165*	*145*	*41*	*15*	*20*	*27*	*4.7*
IMPERIAL (ins)	*6.5*	*6.5*	*5.71*	*1.61*	*0.59*	*0.79*	*1.06*	*0.19*
3202/001 **3202/002** **3202/003** **3202/004**	**Dish, LH** **Dish, RH** **Handle, non locking** **Handle, locking**				**Weight 200g/7.1oz** **Weight 220g/7.8oz** **Weight 290g/10.2oz**			
METRIC (mm)	*155*	*167*	*150*	*49*	*17*	*22*	*35*	*4.5*
IMPERIAL (ins)	*6.10*	*6.58*	*5.91*	*1.93*	*0.67*	*0.87*	*1.38*	*0.18*
5589/353 **5589/355**	**Locking (random)** **Locking (keyed alike)**				**Weight 500g/1.1lb**			
METRIC (mm)	*162*	*162*	*148*	*33*	*18*	*22*	*26*	*5*
IMPERIAL (ins)	*6.38*	*6.38*	*5.83*	*1.30*	*0.71*	*0.87*	*1.02*	*0.2*

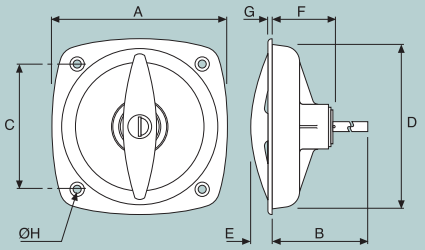

RECESSED 'T' HANDLE

Black, glass filled nylon dish with a black powder-coated T handle.
Supplied with 2 keys.

	A	B	C	D	E	F	G	H
6212/0011 **6212/0021**	**Mixed keys** **Keyed alike**				**Weight 290g/10.2oz**			
METRIC (mm)	*126*	*157*	*90*	*108*	*11*	*41*	*3*	*5.5*
IMPERIAL (ins)	*4.96*	*6.18*	*3.54*	*4.25*	*0.43*	*1.61*	*0.12*	*0.22*

Walsall: 01922 471000 Heywood: 01706 692110 Romsey: 01794 525870 www.albert-jagger.co.uk

Dished Handles

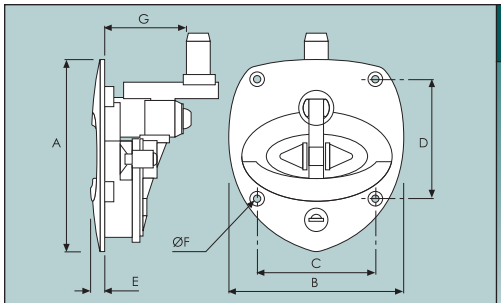

'VECTOR' DROP 'T' HANDLE

Black, powder coated, zinc die-cast handle.
BKV 133 plastic housing.
Stainless steel, spring loaded padlock eye.
Compression mechanism supported by roller bearings.
Adjustable cam,
* 'G' = 15 - 60mm.

	A	B	C	D	E	F	G	H
0857/1000					**Weight 480g/1.1lb**			
METRIC (mm)	*130*	*119.8*	*76.4*	*81.2*	*9.7*	*5.0*	*	
IMPERIAL (ins)	*5.12*	*4.72*	*3.00*	*3.20*	*0.38*	*0.20*		

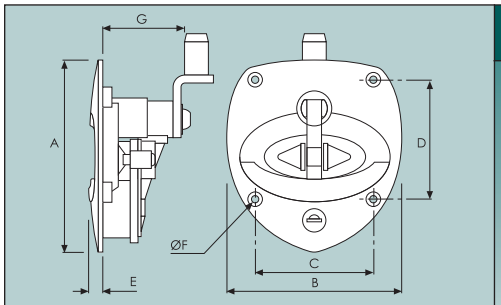

'VECTOR' DROP 'T' HANDLE

Black, powder coated, zinc die-cast handle.
BKV 133 plastic housing.
Stainless steel, spring loaded padlock eye.
Compression mechanism supported by roller bearings.
Fixed cam.

	A	B	C	D	E	F	G	H
0857/2005					**Weight 430g/15.2oz**			
METRIC (mm)	*130*	*119.8*	*76.4*	*81.2*	*9.7*	*5.0*	*55.0*	
IMPERIAL (ins)	*5.12*	*4.72*	*3.00*	*3.20*	*0.38*	*0.20*	*2.17*	

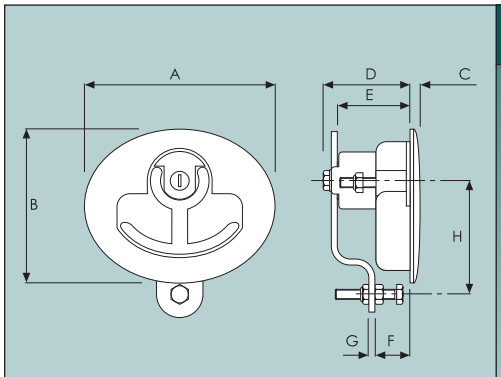

COMPRESSION LATCH

Glass filled nylon body with zinc diecast handle and zinc plated steel latch bar.
Versatile latch bar gives greater range of adjustment & 180° rotation.
Supplied with gasket & zinc plated steel mounting clamps.
Cut-out details available on request.
2 keys supplied.
NB - Dim H - travel from axis
Latch down max @100mm/ min @ 75mm
Latch up - max @ 100mm/ min @ 50mm.
Max compression @ 8mm.

	A	B	C	D	E	F	G	H
5589/0100	**Mixed keys**				**Weight 628g/1.4lb**			
5589/0200	**Keyed alike**				**Weight 628g/1.4lb**			
METRIC (mm)	*150*	*120*	*8.00*	*72.0*	*55.0*	*28.0*	*5.00*	*100*
IMPERIAL (ins)	*5.91*	*4.72*	*0.32*	*2.84*	*2.17*	*1.10*	*020*	*3.94*

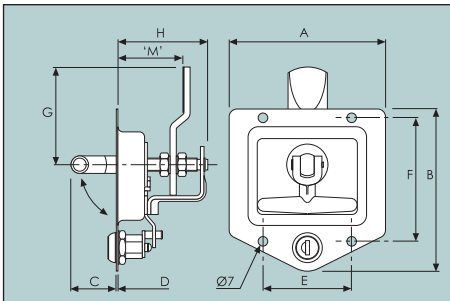

RECESSED DROP 'T' LATCH

Polished 304 stainless steel dish with a chrome plated die-cast 'T'.
Zinc plated steel tongue & support bracket.
Complete with EPDM gasket.
'M' = 45mm to 60mm.
For rod lock system refer page d15.

	A	B	C	D	E	F	G	H
0863/101	**LH, keyed alike**				**Weight 700g/1.5lb**			
0863/102	**RH, keyed alike**				**Weight 700g/1.5lb**			
0863/111	**LH, keyed random**				**Weight 700g/1.5lb**			
0863/112	**RH, keyed random**				**Weight 700g/1.5lb**			
METRIC (mm)	*120*	*124*	*32.0*	*1.50*	*69.0*	*95.0*	*72.0*	*68.0*
IMPERIAL (ins)	*4.72*	*4.88*	*1.26*	*0.02*	*2.72*	*3.74*	*2.84*	*2.68*

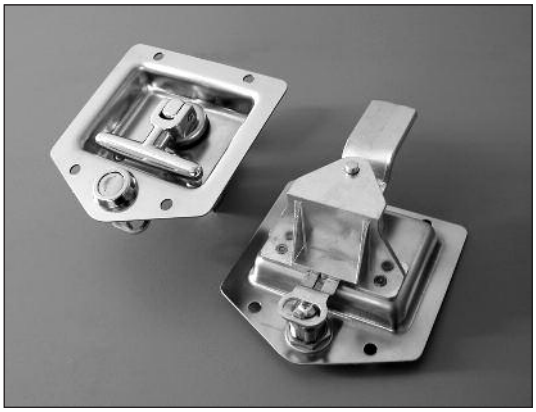

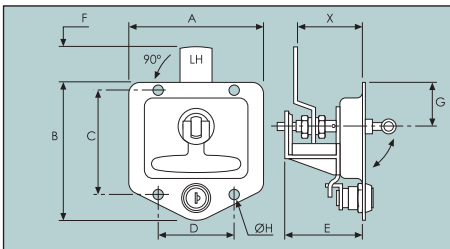

RECESSED DROP-'T' HANDLE

(See also three way rod lock system, page d15).
Dimension X is variable from 43mm to 55mm.

	A	B	C	D	E	F	G	H
5589/548	**Zinc plated Locking, keyed random**				**Weight 730g/1.6lb**			
5589/549	**Stainless steel pan/zinc-plated handle Locking, keyed random**							
5589/540	**Stainless steel pan/zinc-plated handle Locking, keyed alike**							
METRIC (mm)	*120*	*125*	*95*	*69*	*68*	*30*	*40*	*7.5*
IMPERIAL (ins)	*4.72*	*4.92*	*3.74*	*2.72*	*2.68*	*1.18*	*1.58*	*0.30*

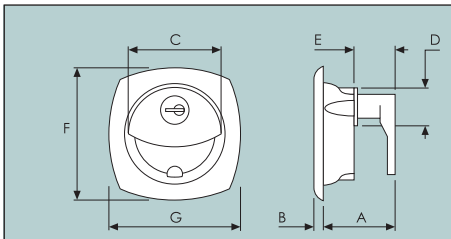

RECESSED COMPARTMENT LOCK

Black plastic case, die-cast cam. c/w inside cover plate, sponge seal and 2 keys.

	A	B	C	D	E	F	G	H
1199/001	**Locking**				**Weight 140g/5oz**			
METRIC (mm)	*44*	*3*	*61*	*19*	*24*	*80*	*80*	
IMPERIAL (ins)	*1.73*	*0.12*	*2.4*	*0.75*	*0.95*	*3.15*	*3.15*	

Cams

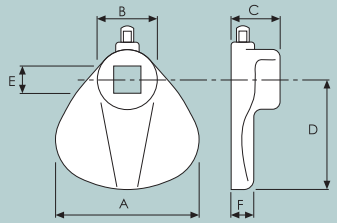

CAM

Die-cast.
8mm square hole c/w grub screw.

	A	B	C	D	E	F	G	H
2881/001					**Weight 50g/1.8oz**			
METRIC (mm)	*40.6*	*19.1*	*12.7*	*31.8*	*8*	*3.8*		
IMPERIAL (ins)	*1.6*	*0.75*	*0.5*	*1.25*	*0.32*	*0.15*		

Bottom-2881/001 *Top-9500/9500*

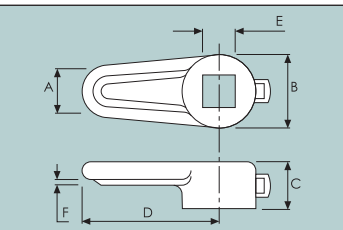

CAM

Die-cast.
8mm square hole c/w grub screw.

	A	B	C	D	E	F	G	H
9500/9500					**Weight 30g/1.0oz**			
METRIC (mm)	*16*	*20*	*14*	*42*	*8*	*2*		
IMPERIAL (ins)	*0.63*	*0.79*	*0.55*	*1.65*	*0.32*	*0.08*		

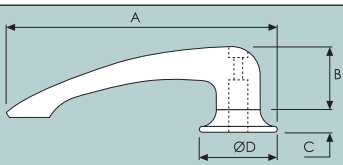

INTERIOR HANDLE

Chrome plate on die-cast base. Suitable for 9.5mm (0.375") spindle.

	A	B	C	D	E	F	G	H
3204/002					**Weight 80g/2.8oz**			
METRIC (mm)	*118*	*23*	*9*	*34*				
IMPERIAL (ins)	*4.65*	*0.91*	*0.35*	*1.34*				
3204/003	**Fixing screw for above**							

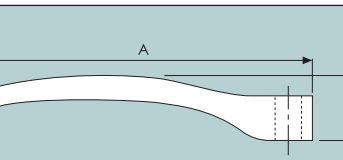

INTERIOR HANDLE

Chrome plate on brass. Supplied with nut. Suitable for 8mm (0315") spindle (not supplied).

	A	B	C	D	E	F	G	H
4228/001					**Weight 170g/6oz**			
METRIC (mm)	*127*	*25.4*						
IMPERIAL (ins)	*5.0*	*1.0*						

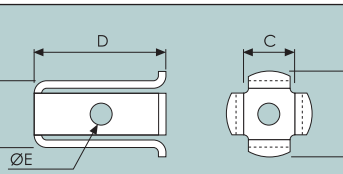

THIMBLE INSERT

Mild steel insert for converting 9.5mm (0.375") interior handles to receive 8mm (0.315") spindle.

	A	B	C	D	E	F	G	H
4171/001								
METRIC (mm)	*15*	*9.5*	*8*	*19*	*4*			
IMPERIAL (ins)	*0.59*	*0.38*	*0.32*	*0.75*	*0.16*			

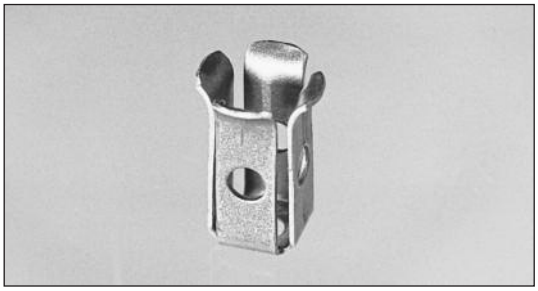

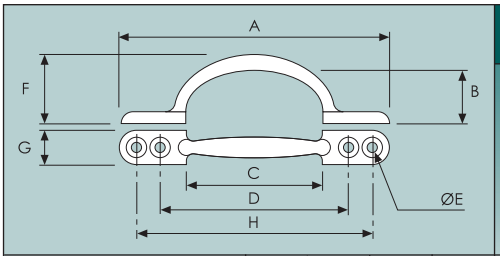

PULL HANDLE

Chrome plate on die-cast base.

	A	B	C	D	E	F	G	H
0099/001					**Weight 80g/2.8oz**			
METRIC (mm)	*163*	*30*	*85*	*114*	*5*	*39*	*17*	*147*
IMPERIAL (ins)	*6.42*	*1.18*	*3.35*	*4.49*	*0.2*	*1.54*	*0.67*	*5.79*

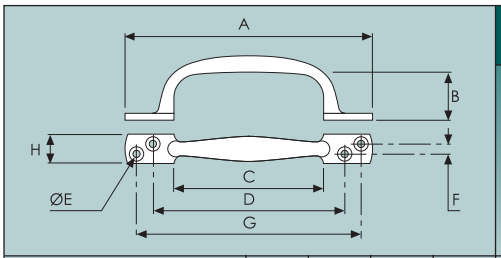

PULL HANDLE

Chrome plate on die-cast base.

	A	B	C	D	E	F	G	H
0846/001					**Weight 60g/2.1oz**			
METRIC (mm)	*147*	*30*	*89*	*114*	*3*	*4*	*132*	*16*
IMPERIAL (ins)	*5.79*	*1.18*	*3.5*	*4.49*	*0.12*	*0.16*	*5.2*	*0.63*

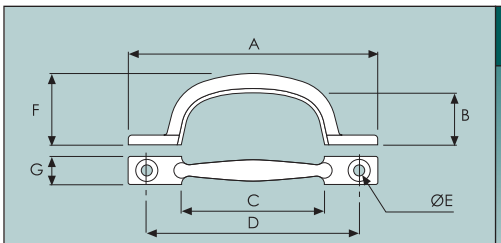

PULL HANDLE

Chrome plate on die-cast base.

	A	B	C	D	E	F	G	H
0845/001					**Weight 40g/1.4oz**			
METRIC (mm)	*118*	*25*	*70*	*100*	*4.8*	*33*	*13*	
IMPERIAL (ins)	*4.65*	*1*	*2.76*	*3.94*	*0.19*	*1.30*	*0.51*	
4206/001					**Weight 160g/5.7oz**			
METRIC (mm)	*193*	*30*	*124*	*170*	*5*	*40*	*19*	
IMPERIAL (ins)	*7.6*	*1.18*	*4.88*	*6.7*	*0.2*	*1.58*	*0.75*	

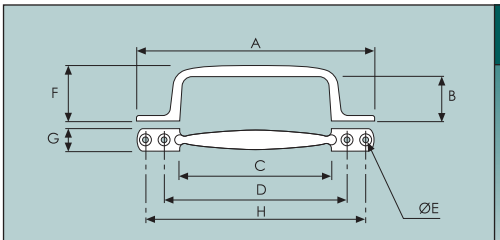

PULL HANDLE

Chrome plate on die-cast base.

	A	B	C	D	E	F	G	H
4207/001					**Weight 140g/5oz**			
METRIC (mm)	*207*	*36.0*	*133*	*162*	*4.50*	*46.0*	*18.0*	*194*
IMPERIAL (ins)	*8.15*	*1.42*	*5.24*	*6.38*	*0.18*	*1.81*	*0.71*	*7.64*

Handles

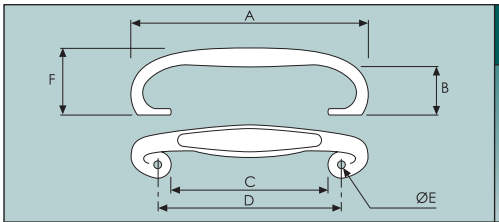

PULL HANDLE

Chrome plated.

	A	B	C	D	E	F	G	H
0098/001	**Brass base**				**Weight 260g/9.2oz**			
METRIC (mm)	*245*	*43*	*182*	*209*	*6.5*	*51*		
IMPERIAL (ins)	*9.65*	*1.70*	*7.17*	*8.23*	*0.26*	*2*		
0097/001	**Die-cast base**				**Weight 190g/6.7oz**			
METRIC (mm)	*195*	*38*	*132*	*153*	*6*	*46*		
IMPERIAL (ins)	*7.68*	*1.5*	*5.20*	*6.02*	*0.24*	*1.81*		
0097/003	**Die-cast base**				**Weight 350g/12.4oz**			
METRIC (mm)	*285*	*40*	*228*	*250*	*7*	*46*		
IMPERIAL (ins)	*11.2*	*1.58*	*9*	*9.84*	*0.28*	*1.81*		

Top - 0097/003
Centre - 0098/001
Bottom - 0097/001

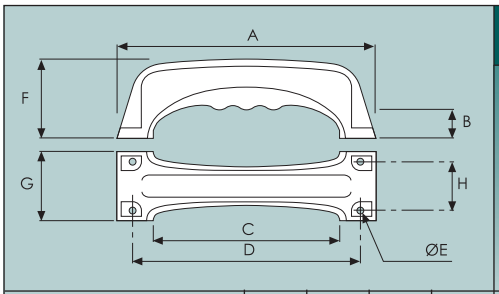

CUSHIONED GRIP PULL HANDLE

Polyester coated, die-cast shell with black rubber core.

	A	B	C	D	E	F	G	H
0786/001	**Black finish**				**Weight 160g/5.7oz**			
0786/002	**Silver finish**							
METRIC (mm)	*164*	*23*	*123*	*150*	*5*	*45*	*43*	*32*
IMPERIAL (ins)	*6.5*	*0.91*	*4.84*	*5.91*	*0.2*	*1.77*	*1.7*	*1.26*

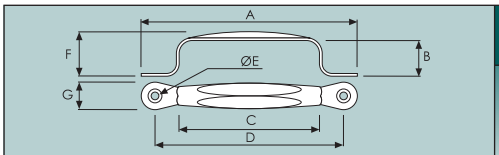

PULL HANDLE

Pressed mild steel.

	A	B	C	D	E	F	G	H
0761/001	**Self colour**				**Weight 50g/1.8oz**			
0761/002	**Black powder coated**							
0768/001	**Black PVC dip-coated**							
METRIC (mm)	*157*	*27*	*112*	*138*	*4.5*	*32*	*20*	
IMPERIAL (ins)	*6.18*	*1.06*	*4.41*	*5.43*	*0.18*	*1.26*	*0.8*	

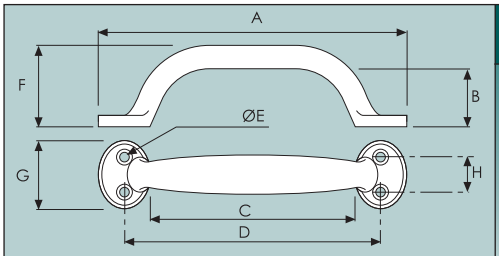

PULL HANDLE

Black japanned pressed steel.

	A	B	C	D	E	F	G	H
0076/001					**Weight 60g/2.1oz**			
METRIC (mm)	*180*	*34*	*120*	*150*	*5*	*45*	*40*	*20*
IMPERIAL (ins)	*7.09*	*1.34*	*4.72*	*5.91*	*0.20*	*1.77*	*1.58*	*0.8*

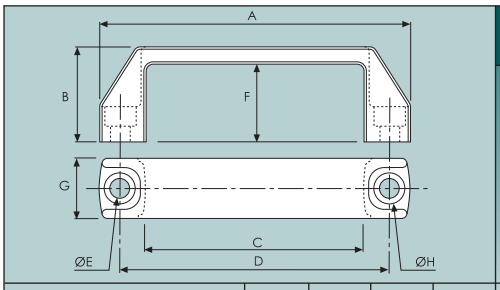

PULL HANDLE

Glass-fibre reinforced polypropylene techno-polymer with a matte black finish.
Maximum working temperature of 100°C.
Resistant to solvents, oils, grease & other chemical agents.

		A	B	C	D	E	F	G	H
0854/003						**Weight 40g/1.4oz**			
METRIC	*(mm)*	*134*	*41*	*95*	*117*	*8.5*	*33.5*	*26*	*13.5*
IMPERIAL	*(ins)*	*5.28*	*1.61*	*3.74*	*4.61*	*0.34*	*1.32*	*1.02*	*0.53*
9800/4136		**M6 hexagon head req'd**				**Weight 40g/1.4oz**			
9800/4137		**M6 C'Sunk head req'd**							
METRIC	*(mm)*	*140*	*40*	*96*	*120*	*6*	*32*	*26*	
IMPERIAL	*(ins)*	*5.5*	*1.58*	*3.78*	*4.72*	*0.24*	*1.26*	*1.02*	
9800/4150		**M6 hexagon head req'd**				**Weight 70g/2.5oz**			
METRIC	*(mm)*	*167*	*52*	*120*	*152*	*6*	*42*	*28*	
IMPERIAL	*(ins)*	*6.58*	*2.10*	*4.72*	*5.98*	*0.24*	*1.65*	*1.10*	

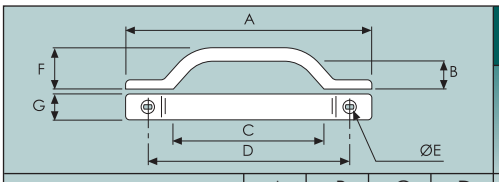

PULL HANDLE

Rigid black plastic.

		A	B	C	D	E	F	G	H
0790/001						**Weight 50g/1.8oz**			
METRIC	*(mm)*	*246*	*28*	*155*	*203*	*6.5*	*41*	*24*	
IMPERIAL	*(ins)*	*9.70*	*1.10*	*6.1*	*8*	*0.26*	*1.61*	*0.95*	

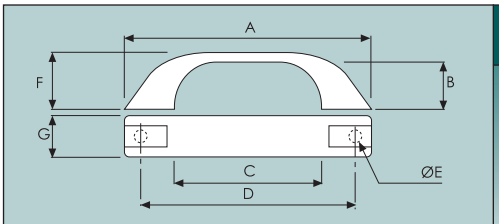

PULL HANDLE

Black polypropylene with hinged clip-on hole covers.

		A	B	C	D	E	F	G	H
0847/001						**Weight 40g/1.4oz**			
METRIC	*(mm)*	*170*	*32.0*	*105*	*137*	*5.00*	*40.0*	*28.0*	
IMPERIAL	*(ins)*	*6.70*	*1.26*	*4.13*	*5.40*	*0.20*	*1.58*	*1.10*	

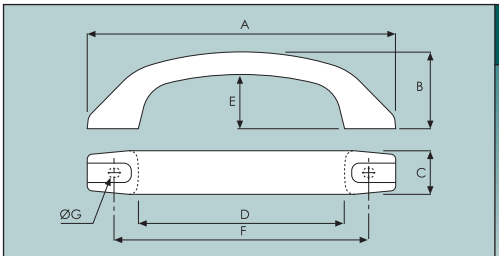

PULL HANDLE

Black, polypropylene.
Concealed fixing.

		A	B	C	D	E	F	G	H
0847/003						**Weight 80g/2.8oz**			
METRIC	*(mm)*	*208*	*45.0*	*29.0*	*135*	*33.0*	*165*	*8.50*	
IMPERIAL	*(ins)*	*8.19*	*1.77*	*1.14*	*5.32*	*1.30*	*6.50*	*0.34*	

Handles

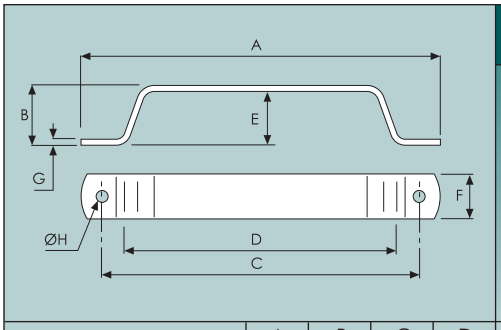

PULL HANDLE

Pressed, 304 stainless steel.

	A	B	C	D	E	F	G	H
0486/3797					**Weight 30g/1.1oz**			
METRIC (mm)	*120*	*18.0*	*107*	*88.0*	*18.0*	*15.0*	*2.00*	*4.30*
IMPERIAL (ins)	*4.72*	*0.71*	*4.21*	*3.47*	*0.71*	*0.59*	*0.08*	*0.17*

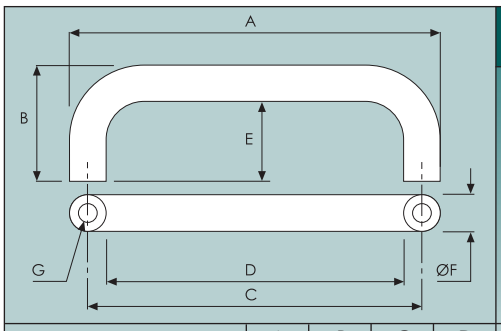

PULL HANDLE

Polished aluminium.
Fixing via 2 x M5 bolts (not supplied).

	A	B	C	D	E	F	G	H
0486/3425					**Weight 30g/1.1oz**			
METRIC (mm)	*102*	*32.0*	*92.0*	*82.0*	*22.0*	*10.0*	*M5*	
IMPERIAL (ins)	*4.02*	*1.26*	*3.62*	*3.23*	*0.87*	*0.39*		

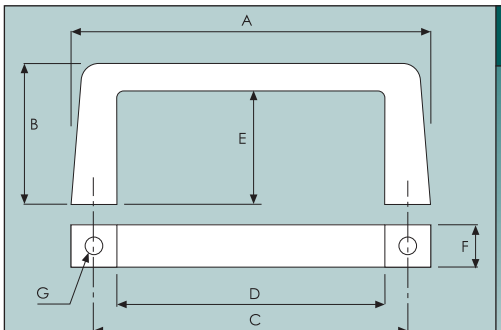

PULL HANDLE

Black, anodised aluminium.
Fixing via 2 x M5 bolts (not supplied).

	A	B	C	D	E	F	G	H
0486/3644					**Weight 50g/1.8oz**			
METRIC (mm)	*102*	*40.0*	*88.0*	*76.0*	*32.0*	*12.0*	*M5*	
IMPERIAL (ins)	*4.02*	*1.58*	*3.47*	*2.99*	*1.26*	*0.47*		

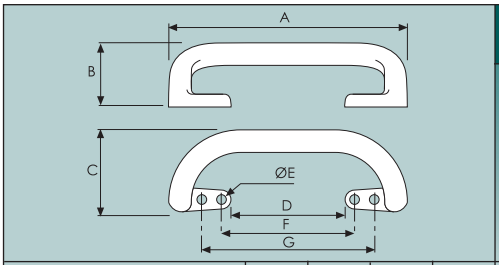

PULL HANDLE

Expanded polyurethane foam on a spring steel core. Semi-gloss, etched granular finish with snap-in plugs for hole concealment.

		A	B	C	D	E	F	G	H
0080/001	**Black**					**Weight 380g/13.4oz**			
0080/101	**Yellow**					**Weight 380g/13.4oz**			
METRIC	*(mm)*	*296*	*74*	*102*	*141*	*6*	*165*	*213*	
IMPERIAL	*(ins)*	*11.65*	*2.91*	*4.02*	*5.55*	*0.24*	*6.5*	*8.39*	
0080/003	**Black**					**Weight 760g/1.7lb**			
0080/102	**Yellow**					**Weight 760g/1.7lb**			
METRIC	*(mm)*	*470*	*78*	*104*	*287*	*6.75*	*327*	*375*	
IMPERIAL	*(ins)*	*18.5*	*3.07*	*4.09*	*11.30*	*0.27*	*12.9*	*14.76*	

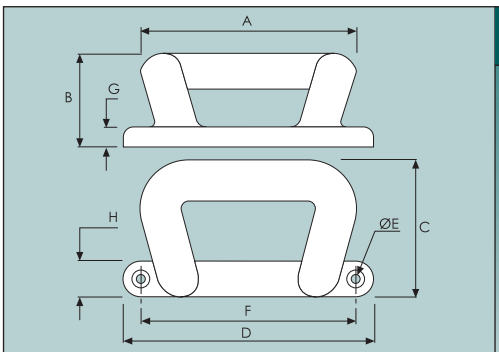

PULL HANDLE

Black expanded polyurethane foam on a spring steel core. Semi-gloss, etched granular finish with snap-in plugs for hole concealment.

		A	B	C	D	E	F	G	H
0080/002						**Weight 420g/14.8oz**			
METRIC	*(mm)*	*155*	*66*	*100*	*178*	*7*	*150*	*15*	*28*
IMPERIAL	*(ins)*	*6.10*	*2.60*	*3.94*	*7*	*0.28*	*5.91*	*0.59*	*1.10*

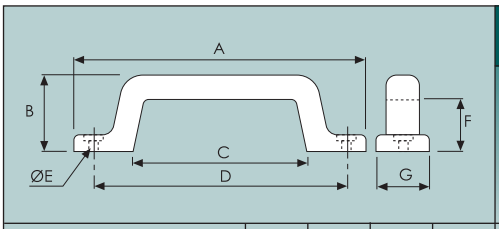

PULL HANDLE

Expanded polyurethane on a steel core. C/w moulded plugs to conceal fixing holes. Textured finish

		A	B	C	D	E	F	G	H
5589/414						**Weight 160g/5.7oz**			
METRIC	*(mm)*	*185*	*55*	*114*	*160*	*8*	*32*	*30*	
IMPERIAL	*(ins)*	*7.28*	*2.17*	*4.49*	*6.30*	*0.32*	*1.26*	*1.18*	
5589/415						**Weight 250g/8.8oz**			
METRIC	*(mm)*	*280*	*55*	*196*	*253*	*8*	*32*	*30*	
IMPERIAL	*(ins)*	*11*	*2.17*	*7.72*	*9.96*	*0.32*	*1.26*	*1.18*	

Handles

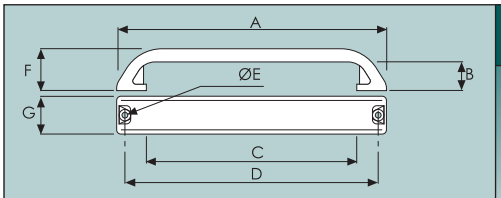

PULL HANDLE

Black powder coat on die-cast case.

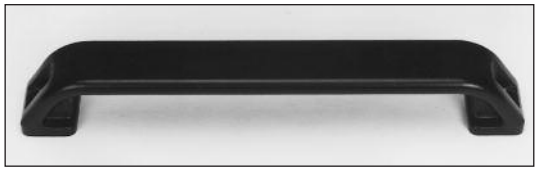

	A	B	C	D	E	F	G	H
0856/002					**Weight 40g/1.4oz**			
METRIC (mm)	*254*	*25.4*	*204*	*238*	*7.0*	*34.5*	*32*	
IMPERIAL (ins)	*10.0*	*1.00*	*8.03*	*9.37*	*0.28*	*1.36*	*1.26*	

PART NUMBER (TUBE ONLY)	TUBE LENGTH	OVERALL LENGTH	HOLE CENTRES	WEIGHT
9800/4139	*266mm (10.5")*	*330mm (13")*	*300mm (11.8")*	*190g (6.7oz)*
9800/4140	*366mm (14.4")*	*430mm (17")*	*400mm (15.8")*	*260g (9.2oz)*
9800/4141	*466mm (18.4")*	*530mm (20.9")*	*500mm (19.7")*	*330g (11.7oz)*
9800/4142	*566mm (22.3")*	*630mm (24.8")*	*600mm (23.6")*	*400g (14.1oz)*
9800/4144	*666mm (26.2")*	*730mm (28.7")*	*700mm (27.6")*	*470g (1.03lb)*
9800/4145	*766mm (30.2")*	*830mm (32.7")*	*800mm (31.5")*	*540g (1.2lb)*

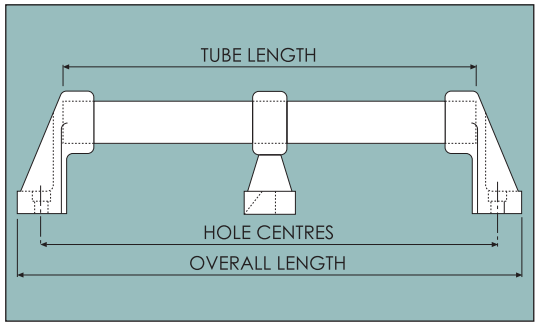

N.B. Tubes and stays are supplied separately.

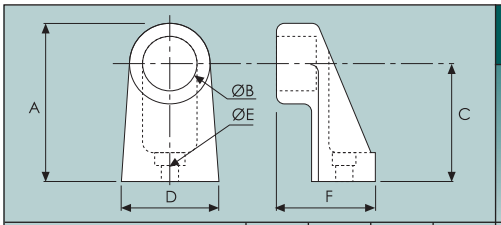

END STAY

Black polyamide.

	A	B	C	D	E	F	G	H
9800/4138					**Weight 70g/2.5oz**			
METRIC (mm)	*80*	*30*	*60*	*46*	*8*	*54*		
IMPERIAL (ins)	*3.15*	*1.18*	*2.36*	*1.81*	*0.32*	*2.13*		

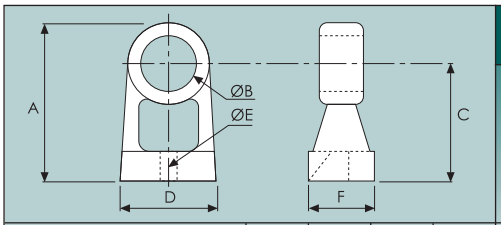

CENTRE STAY

Black polyamide.

	A	B	C	D	E	F	G	H
9800/4151					**Weight 50g/1.8oz**			
METRIC (mm)	*80*	*30*	*60*	*46*	*8*	*34*		
IMPERIAL (ins)	*3.15*	*1.18*	*2.36*	*1.81*	*0.32*	*1.34*		

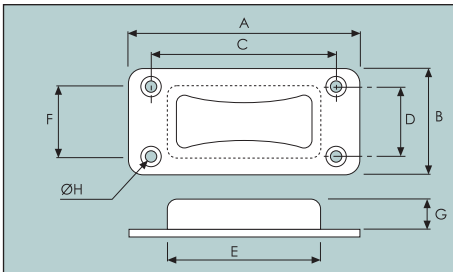

RECESSED PULL HANDLE

Low profile with a flush fitting face plate originally designed for sliding doors & shutters. Textured finish on both items.

	A	B	C	D	E	F	G	H
5596/400	**Black, glass filled nylon**				**Weight 50g/1.8oz**			
5596/403	**Black, zinc die-cast**				**Weight 233g/8oz**			
METRIC (mm)	*133*	*60.0*	*114*	*41.0*	*95.0*	*45.0*	*21.0*	*6.00*
IMPERIAL (ins)	*5.24*	*2.36*	*4.49*	*1.61*	*3.74*	*1.77*	*0.83*	*0.24*

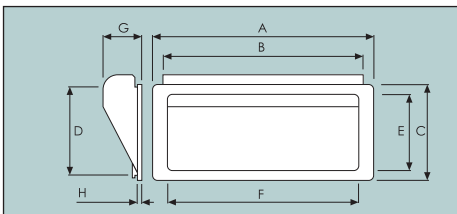

FLUSH PANEL HANDLE

Black plastic.
Push fit.

	A	B	C	D	E	F	G	H
5596/410	**0.5 - 1.5mm panel**				**Weight 10g/0.4oz**			
METRIC (mm)	*90.0*	*83.0*	*40.0*	*34.0*	*29.0*	*78.0*	*16.0*	*1.50*
IMPERIAL (ins)	*3.54*	*3.28*	*1.58*	*1.33*	*1.14*	*3.07*	*0.63*	*0.06*
5596/412	**1.5 - 2mm panel**				**Weight 30g/1.1oz**			
METRIC (mm)	*110*	*101*	*56.3*	*49.0*	*34.0*	*95.0*	*18.0*	*3.0*
IMPERIAL (ins)	*4.33*	*3.98*	*2.22*	*1.93*	*1.34*	*3.75*	*0.71*	*0.12*

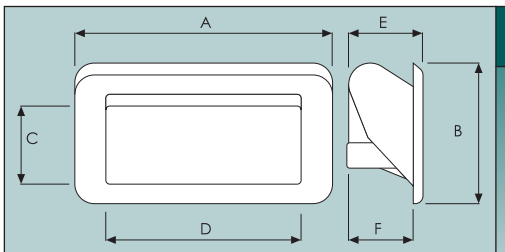

FLUSH PANEL HANDLE

Black plastic moulding complete with bezel, mild steel clamp & 2 x M6 bolts. Suitable for panels between 4mm & 10mm. Cut-out 109 x 49 - 55mm depending on panel thickness.

	A	B	C	D	E	F	G	H
5596/402					**Weight 160g/5.6oz**			
METRIC (mm)	*130*	*70.0*	*49.0*	*100*	*39.0*	*34.0*		
IMPERIAL (ins)	*5.12*	*2.76*	*1.93*	*3.94*	*1.54*	*1.34*		

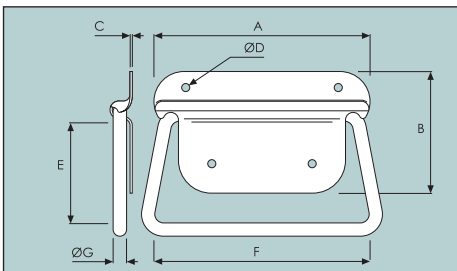

CHEST HANDLE

Zinc plated, mild steel. 25kg/55lb maximum load rating.

	A	B	C	D	E	F	G	H
0486/3633					**Weight 110g/3.9oz**			
METRIC (mm)	*96.0*	*54.0*	*1.20*	*4.00*	*54.0*	*92.0*	*6.00*	
IMPERIAL (ins)	*3.78*	*2.13*	*0.05*	*0.16*	*2.13*	*3.62*	*0.24*	

50~100 Series, Two Rotor Latches

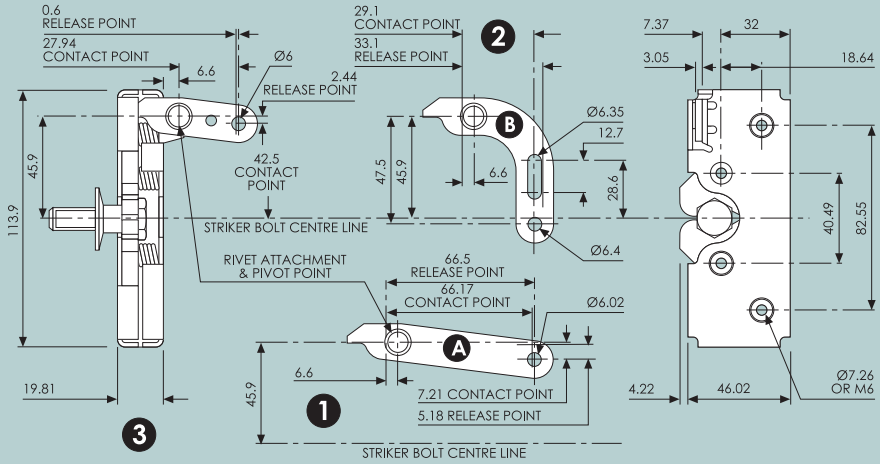

A range of robust, two-rotor latches designed for both on or off-road applications requiring resistance to vibration and dust.

They are designed for internal use and are suitable for visible or concealed fixing.

A variety of trip levers are available to release the mechanism, giving the option of direct or remote operation when linked to paddle handles, push-button handles, lever handles, etc.

The casing is protected with a zinc-plated, finish on a high strength steel base. While the internal latch components are made from heat treated, fine-blanked steel.

All critical moving parts are treated with a layer of oven-cured, dry lubricant which is applied at the manufacturing stage.

• PART NUMBERS • PART NUMBERS • PART NUMBERS •		
1.	LEFT HAND, THRU. FIXING WITH LEVER 'A'	**9500/2221**
	RIGHT HAND, THRU. FIXING WITH LEVER 'A'	**9500/2222**
2.	LEFT HAND, THRU. FIXING WITH LEVER 'B'	**9500/2231**
	RIGHT HAND, THRU. FIXING WITH LEVER 'B'	**9500/2232**
3.	LEFT HAND, THRU. FIXING WITH STANDARD LEVER	**9500/2211**
	RIGHT HAND, THRU. FIXING WITH STANDARD LEVER	**9500/2212**
	LEFT HAND, M6 FIXING WITH STANDARD LEVER	**9500/2241**
	RIGHT HAND, M6. FIXING WITH STANDARD LEVER	**9500/2242**

All latches shown above are for use with 70-200 series striker bolts, as shown on page d45 (opposite).

50~150 Series, Two Rotor Latches

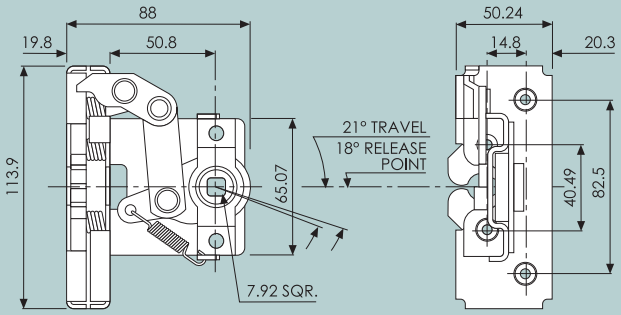

• PART NUMBERS • PART NUMBERS • PART NUMBERS •	
LEFT HAND, USE WITH LEVER HANDLE	**9500/2201**
RIGHT HAND, USE WITH LEVER HANDLE	**9500/2202**

The 50-150 Series incorporates the basic components of the 50-100 Series, but offers the added facility of a release linkage system and support bracket appropriate for use with most lever handles with an 8 mm drive bar.

Four 1/4"-20 UNC bolts are required for installation (not supplied), or an M6 fixing option is available, subject to quantity.

All latches shown are for use with 70-200 series striker bolts, as shown on page d45 (opposite).

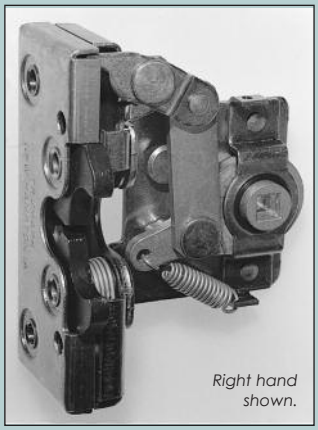

50~170 Series, Two Rotor Latches

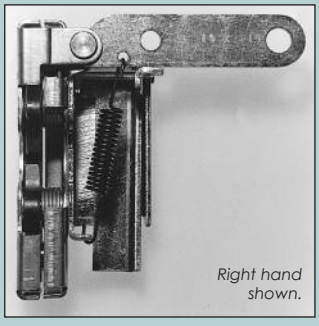

The 50-170 Series incorporates the same basic components as the 50-100 Series, with additional linkage configurations, which allows facility for a push-button release, as well as, the option of remote operation.

Four 1/4"-20 UNC bolts are required for installation (not supplied), or an M6 fixing option is available, subject to quantity.

• PART NUMBERS • PART NUMBERS • PART NUMBERS •	
LEFT HAND, USE WITH PUSH-BUTTON HANDLE	**9500/5001**
RIGHT HAND, USE WITH PUSH-BUTTON HANDLE	**9500/5002**

All latches shown are for use with 70-200 series striker bolts, as shown on page d45 (opposite).

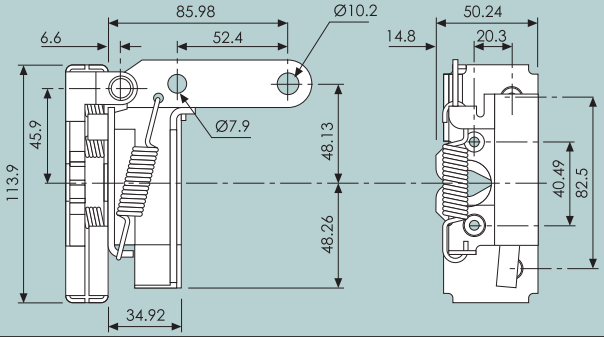

TriMark

50~200 Series, Slimline, Single Rotor Latches

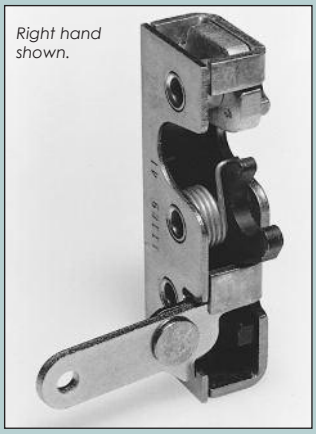

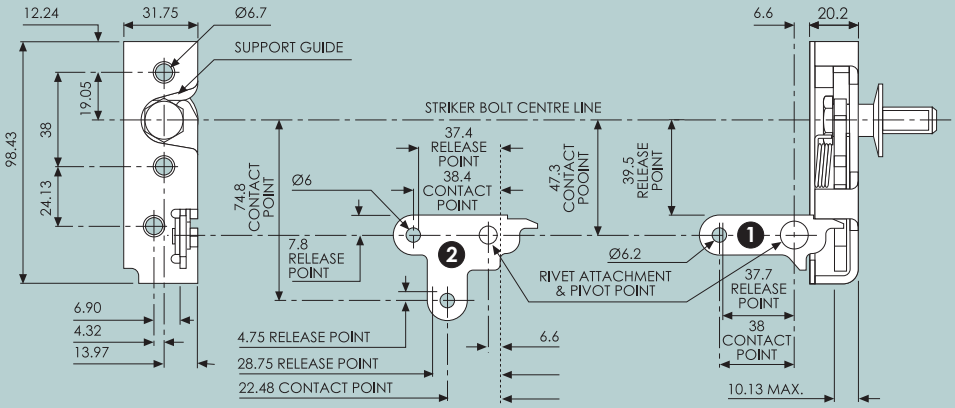

A slimline, single-rotor latch designed for applications where door thickness is to be kept to a minimum, and the resistance to dust and vibration are required.

They are designed for internal use and are suitable for visible or concealed fixing.

Vertical mounting with the support guide at the top is required for correct alignment and subsequent engagement of the locking pawl and striker bolt.

Lubrication and material specifications are to the same high standards as found on the 50-100 Series two-rotor latches.

All latches shown are for use with 70-100 Series striker, as shown below.

• PART NUMBERS • PART NUMBERS • PART NUMBERS •		
1.	LEFT HAND, SLIMLINE LATCH WITH STANDARD LEVER	9500/2500
	RIGHT HAND, SLIMLINE LATCH WITH STANDARD LEVER	9500/2501
2.	LEFT HAND, SLIMLINE LATCH WITH 2 POINT LEVER	9500/2502
	RIGHT HAND, SLIMLINE LATCH WITH 2 POINT LEVER	9500/2503

100~410 Series, Adjustable Caged Nut

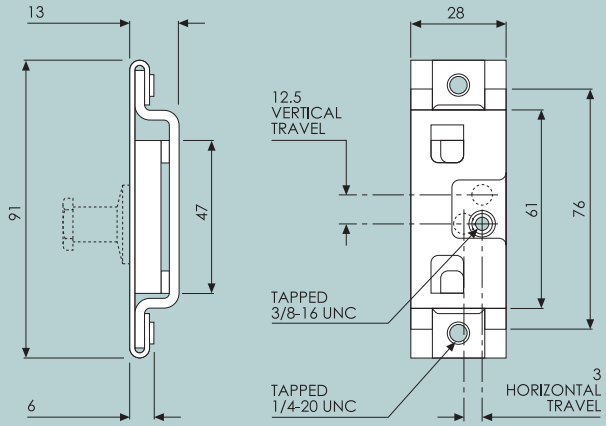

With a zinc plated finish, this pressed steel unit offers the facility to adjust the striker bolt by up to 6.35 mm (o.25") vertically and 3 mm (0.118") horizontally.

This one piece assembly is easily installed using two 1/4"-20 screws (not supplied).

The steel nut is designed to withstand tensile loads in excess of 1132kg (2500lb), when used in conjunction with 70-100 striker bolt (9500/9100).

For use with 50-200 Series, slimline, single-rotor latches.

• PART NUMBERS • PART NUMBERS • PART NUMBERS •		
	ADJUSTABLE CAGED NUT ASSEMBLY	9500/9301

70~100 Series, Striker Bolt

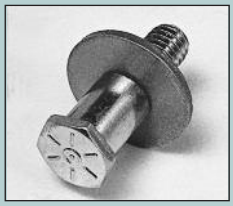

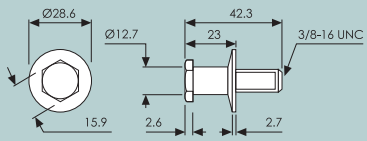

Manufactured from a single piece of heat treated, alloy steel with a zinc plate finish.

A heat treated Belleville washer deflects the latch, thus, providing a positive self-locking action.

For use with the 50-200 Series single-rotor latches, in conjunction with the cage nut assembly.

• PART NUMBERS • PART NUMBERS • PART NUMBERS •		
	STRIKER BOLT, 3/8" 16 UNC	9500/9100

70~200 Series, Striker Bolts

With the same finish and material specification as the 70-100 series strikers, but with a more robust, larger diameter striking area, the 70-200 series striker bolts are designed for use with the 50-100 series, two-rotor latches, as shown on page d44 (opposite).

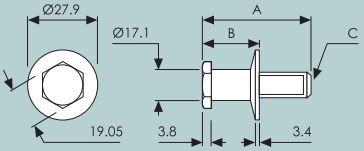

• PART NUMBERS • PART NUMBERS • PART NUMBERS •		
	STRIKER BOLT, A= 52 mm, B= 31 mm, C= 1/2"-13 UNC	9500/9101
	STRIKER BOLT, A= 44 mm, B= 25.4 mm, C= M12	9500/9102

Walsall: 01922 471000 Heywood: 01706 692110 Romsey: 01794 525870 www.albert-jagger.co.uk

50~300 Series, Single~Rotor Compartment Locks

The 50-300 Series range of single-rotor latches are specifically designed for any lightweight applications where a finger or remote release is required, such as, compartment, storage, and access doors.

The design is based on the 50-100 Series slimline, single rotor latch and, therefore, shares the same high standard of material specification, finish and internal lubrication. The latch is to be used with the 70-100 Series striker bolt.

Right hand shown.

• PART NUMBERS • PART NUMBERS • PART NUMBERS •		
1.	RIGHT HAND, 45° FINGER RELEASE	**9500/2102**
2.	LEFT HAND, VERTICAL FINGER RELEASE	**9500/2103**
	RIGHT HAND, VERTICAL FINGER RELEASE	**9500/2104**
	RIGHT HAND, VERTICAL FINGER RELEASE/PVC DIP COATED	**9500/2105**
	STRIKER BOLT, (3/8"-16UNC)	**9500/9100**

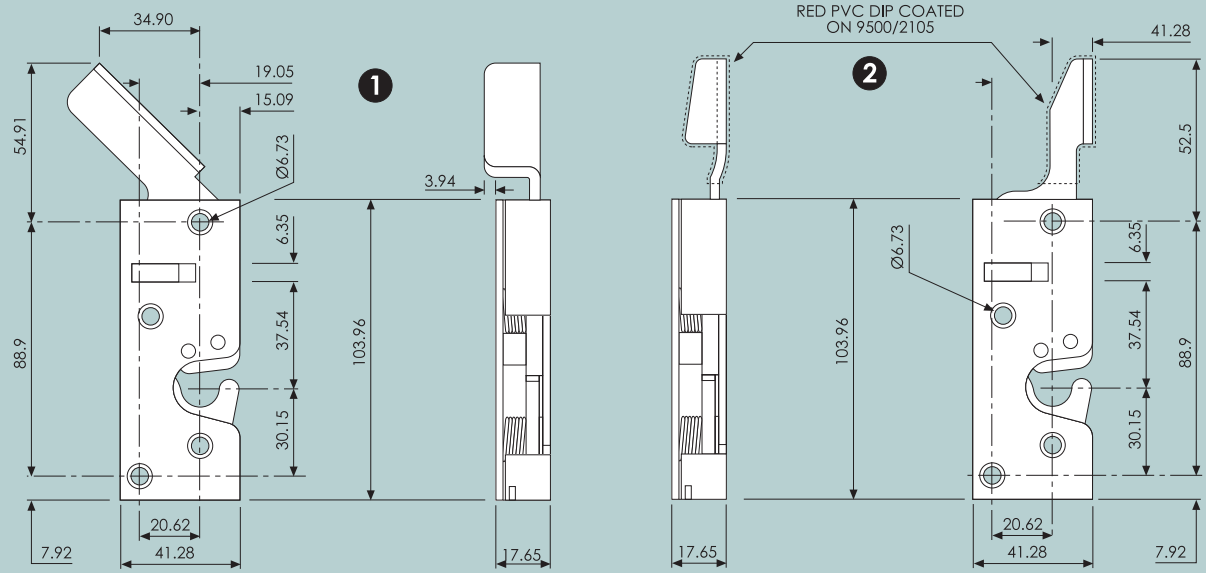

50~300 Series, Mini, Single~Rotor Latches

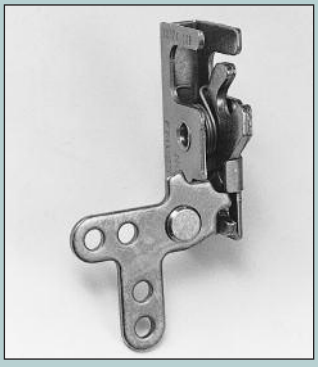

Right hand shown.

Designed specifically for light-weight door applications, this single rotor, mini latch can also be used on numerous other applications including storage lockers and compartment doors.

The latch consists of internal components manufactured from high-strength steel and springs of stainless steel to resist corrosion. The casing is manufactured from pressed steel and finished with a zinc plated coating.

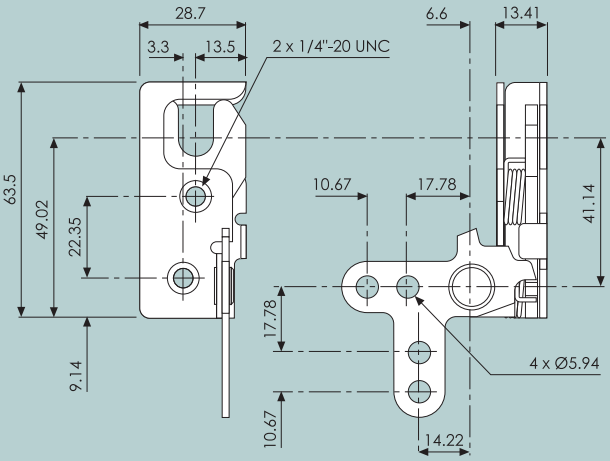

• PART NUMBERS • PART NUMBERS • PART NUMBERS •		
	LEFT HAND, MINI, SINGLE-ROTOR LATCH	**9500/2106**
	RIGHT HAND, MINI, SINGLE-ROTOR LATCH	**9500/2107**

30~850 Series Flush Mounted Paddle Handle

Right hand shown.

A flush fitting paddle handle designed for medium to heavy duty highway vehicle doors that features a robust construction, with lock details that allow for 'powered' locking and is compliant to **FMVSS 206**.

The latch can be fitted separately from the handle, thus giving added versatility and a viable solution to most layout problems.

The paddle handle assembly comprises of a paddle and body of die-cast, zinc-alloy finished in black, powder-coating; pivot components are zinc plated, mild steel; and axle bushes and thrust washers of nylon.

Two 1/4"-20 UNC mounting brackets (supplied) are all that is required for fast, simple and cost effective installation.

Both the 50-100 and the 50-200 latches can be used in conjunction with this versatile paddle handle.

• PART NUMBERS • PART NUMBERS • PART NUMBERS •	
LEFT HAND, LOCKING PADDLE HANDLE	**9500/77011**
RIGHT HAND, PADDLE HANDLE (SHOWN)	**9500/77021**
LEFT HAND, NON-LOCKING PADDLE HANDLE	**9500/7703**
RIGHT HAND, NON-LOCKING PADDLE HANDLE	**9500/7704**

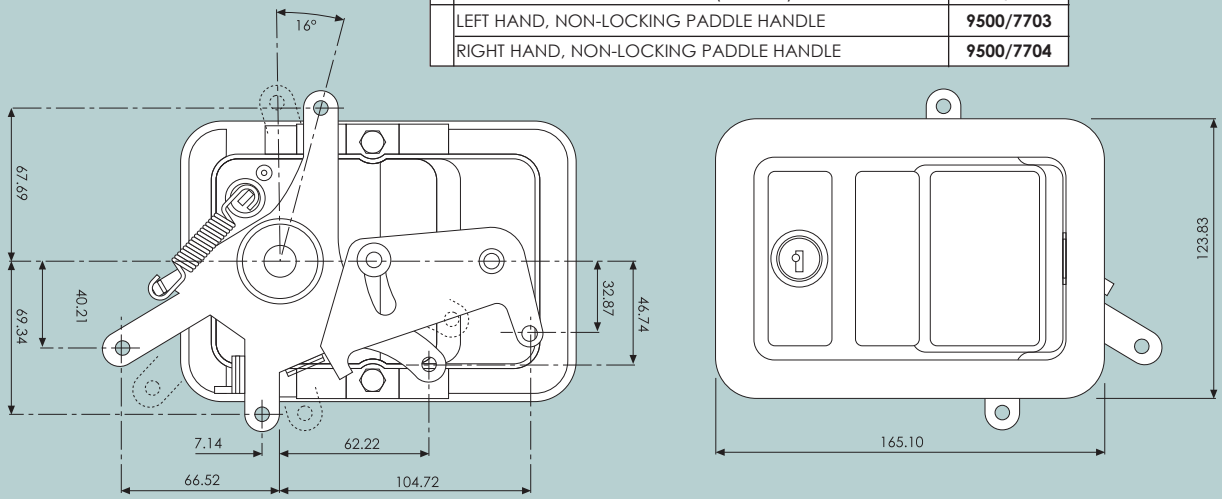

60~250 Series Travel Trailer Latch With Built-in, Dead-bolt

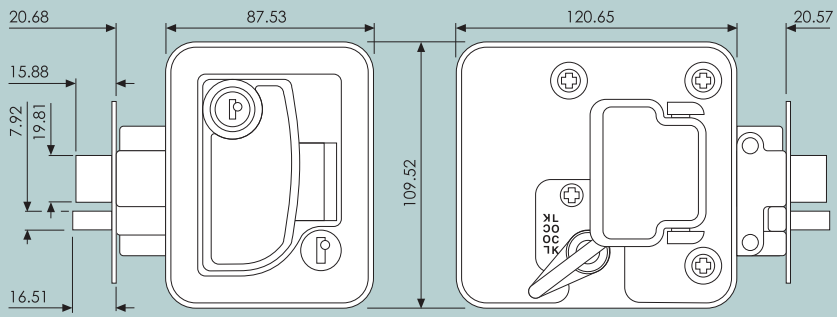

The 60-250 tavel trailer latch is a stylish, compact door locking assembly that has proven itself reliable over many years.

With recessed exterior handle, low-profile interior release and the additional security of a built-in, dead-bolt, this unit is ideal for use on mobile homes, horsebox-groom/living accomodation and access doors.

The latch is supplied with a standard inside cover plate which is designed with an integral pull handle facility and an inside switch-lock assembly allowing for easy operation.

All major components are made from die-cast, zinc-alloy with a powder-coat finish of white. Both standard locking and dead-bolt

Key cylinders are keyed alike, thus, eliminating the need for separate keys for a single latch.

• PART NUMBERS • PART NUMBERS • PART NUMBERS •	
WHITE, PADDLE-HANDLE HOUSING. LOCKING WITH KEYS ALIKE.	**9500/79011**
WHITE, PADDLE-HANDLE HOUSING. LOCKING WITH MIXED KEYS.	**9500/79031**
WHITE, INSIDE COVER PLATE	**9500/79401**
ZINC-PLATED, DOOR EDGE COVER.	**9500/7911**
ZINC-PLATED, STRIKER PLATE	**9500/7920**

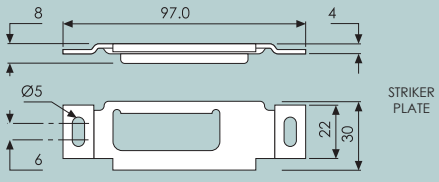

100~5000 Series, Flush Mounted Paddle Handle & Latch Mechanism

Right hand shown.

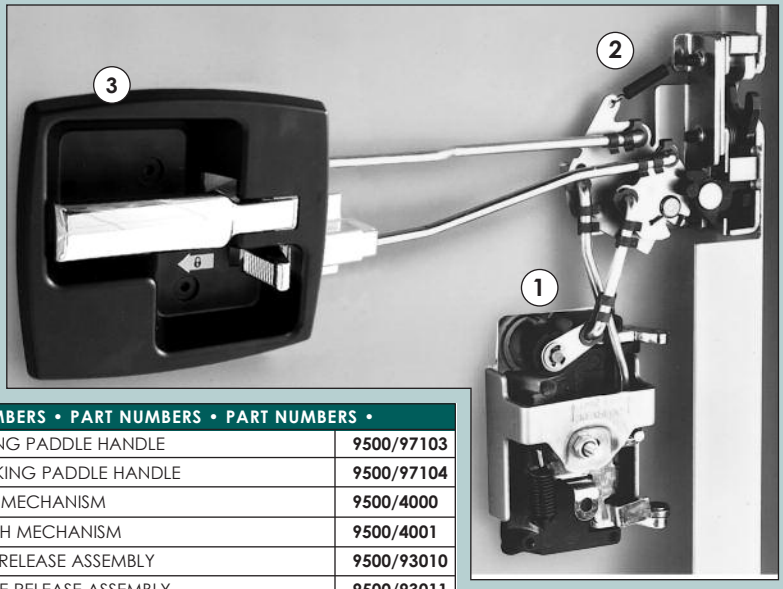

The 100-5000 Series is a complete latching system that offers quality, reliability and versatility. Having both external and internal locking means this system is ideally suited to both driver and access doors. Using the well proven and tested 50-250 Series latch mechanism, ensures safety and durability, having been tested to over 50,000 operations.

• PART NUMBERS • PART NUMBERS • PART NUMBERS •		
1.	LEFT HAND, LOCKING PADDLE HANDLE	**9500/97103**
	RIGHT HAND, LOCKING PADDLE HANDLE	**9500/97104**
2.	LEFT HAND, LATCH MECHANISM	**9500/4000**
	RIGHT HAND, LATCH MECHANISM	**9500/4001**
3.	LEFT HAND, INSIDE RELEASE ASSEMBLY	**9500/93010**
	RIGHT HAND, INSIDE RELEASE ASSEMBLY	**9500/93011**
4.	STRIKER BOLT, (3/8"-16 UNC)	**9500/9100**

30~400 Series Outside Paddle Handle

Right hand shown.

The 30-400 Series outside paddle handle can be adapted to fit most doors with fixed, roll-down or power windows.

The handle is designed to be installed either vertically or horizontally, thus, multiplying the fitting options within the door.

Constructed from sturdy diecast, zinc-alloy, the paddle and housing are finished in a black, powder-coating.

Mounting via a single nut, which is supplied, along with a clear-passivated, mild-steel bracket. A gasket is also included in the assembly which is designed to prevent any water ingress.

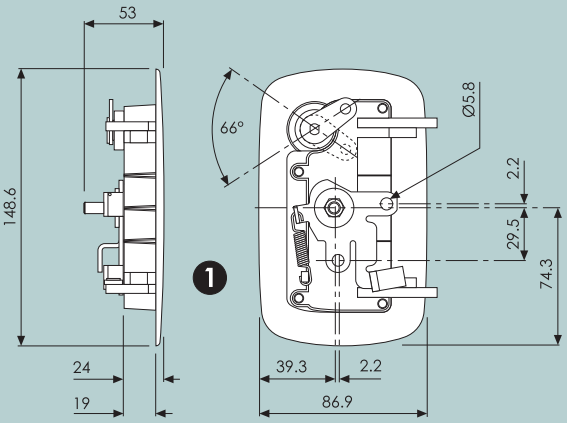

50~250 Series Latch Mechanism

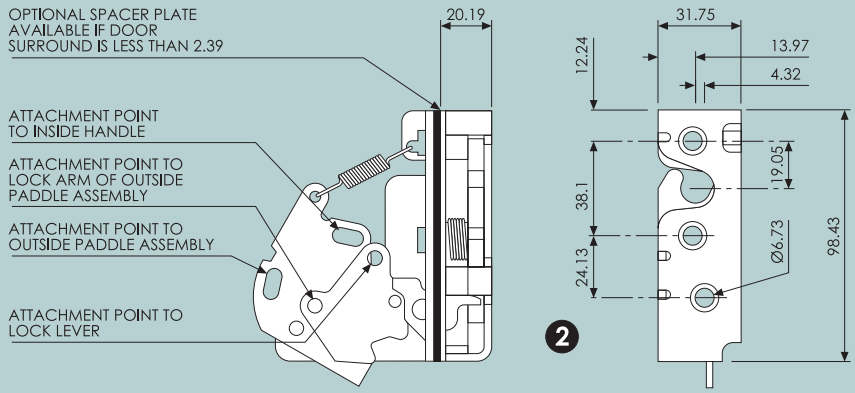

Based on a single rotor mechanism with added attachment points to suit various linkage arrangements. The latch mechanism is ruggedly designed to take vertical loads under arduous conditions.

The material specifications are to the same high standard as found on the 50-200 Series single rotor latches. The 70-100 Series striker bolt is recommended to obtain maximum efficiency.

The latch mechanism has two main design features: it can be locked whilst the door is in the open position and remains locked once the door is slammed closed; and has the ability to be mounted on either the inside or outside of the door edge.

www.albert-jagger.co.uk Walsall: 01922 471000 Heywood: 01706 692110 Romsey: 01794 525870

30~425 Series Inside Bezel Assembly

Moulded in black plastic, the inside bezel assembly is fitted with a release lever and a sliding lock mechanism, both of which are finished in polished chrome.

Due to its bevelled edge and low profile, the whole assembly fits neatly on the inside of the door panel when installed with the screws provided.

COLOUR	A	B	C	D	E	F	G	H	I	J	K	PART NO.
(mm) BLACK (ins)	4.5 4.0	2.7	10	5	8	18.5	3.6	8.3	6.8	5.8	4.3	9500/9323
	.176 .156	.108	.400	.210	.320	.730	.140	.325	.268	.228	.169	
(mm) GREEN (ins)	4.5 4.0	2.7	10	5	8	18.5	2.3	7	6.8	5.8	4.3	9500/9324
	.176 .156	.108	.400	.210	.320	.730	.089	0.275	.268	.228	.169	
Zinc plated rod 1828 mm (6') x 7G												9306/1829

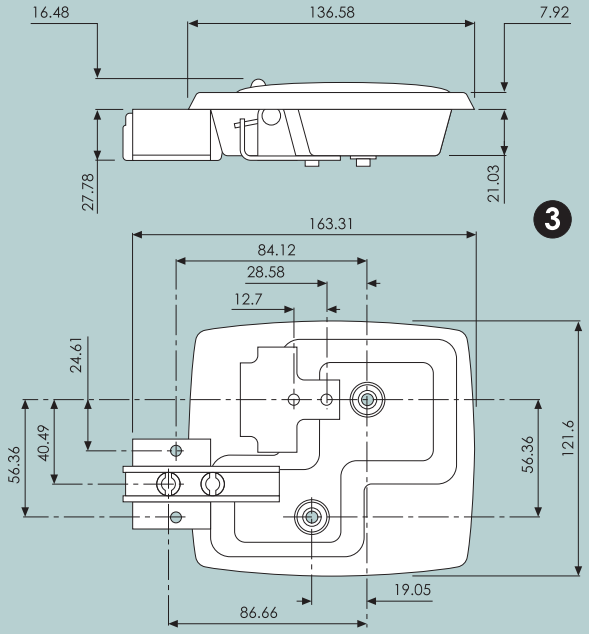

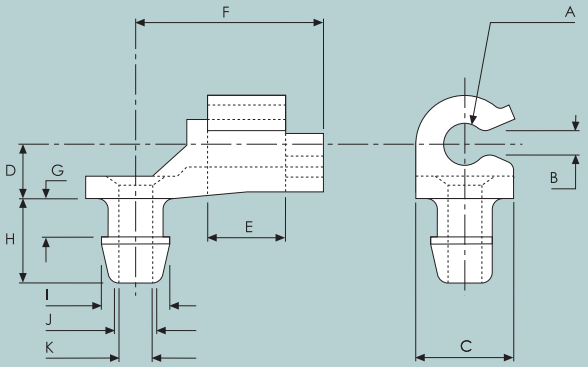

30~450 Series Two Point Paddle Handle

Right hand shown.

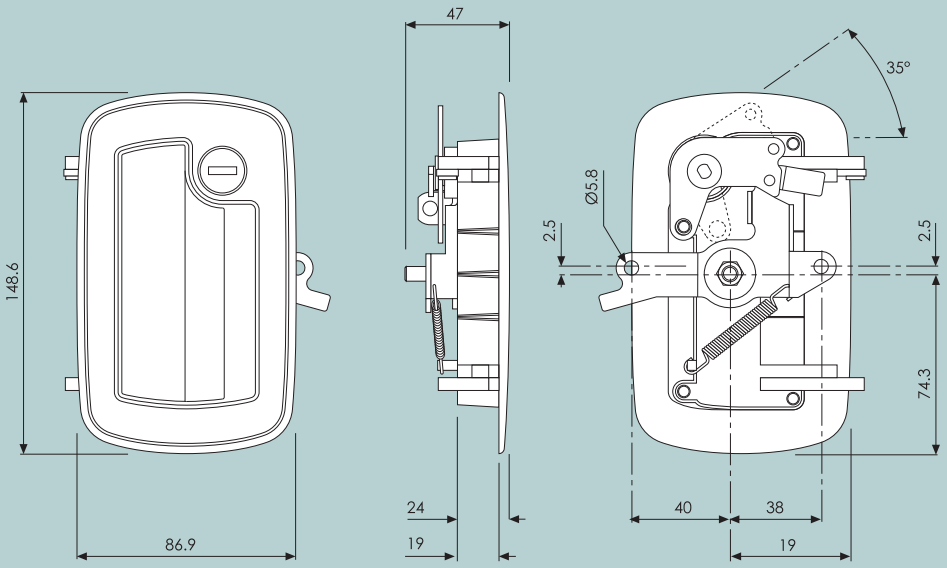

The 30-450 Series paddle handle is designed to fit most doors that require a two-point latching mechanism.

The automotive styling is the same as the 30-400 Series, therefore, it shares the same material specifications and features but has an added feature of a formed tab on the pivot plate for an optional, remote inside release.

For use with various spring loaded, plunger bolts, the 50-100 Series two rotor and the 50-200 Series single rotor latches. It can also be incorporated into the 100-5000 vehicle door system.

• PART NUMBERS • PART NUMBERS • PART NUMBERS •	
LEFT HAND, LOCKING PADDLE HANDLE,	**9500/97101**
RIGHT HAND, LOCKING PADDLE HANDLE,	**9500/97102**

Walsall: 01922 471000 Heywood: 01706 692110 Romsey: 01794 525870

www.albert-jagger.co.uk

30~250 Series, Flush Mounted Paddle Handle & Latch Mechanism

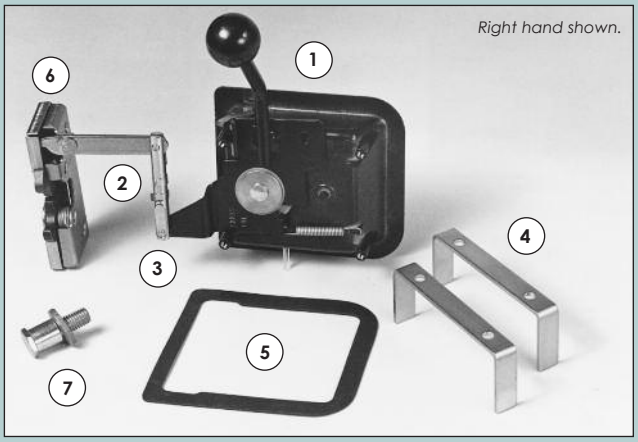

• PART NUMBERS • PART NUMBERS • PART NUMBERS •		
1a	LEFT HAND, LOCKING PADDLE HANDLE, COMPLETE WITH INSIDE RELEASE LEVER	**9500/7401**
	RIGHT HAND, LOCKING PADDLE HANDLE, COMPLETE WITH INSIDE RELEASE LEVER	**9500/7402**
2.	LINKAGE ROD	**9500/9321**
3.	LINKAGE CLIP	**9500/9322**
4.	MOUNTING BRACKET	**9500/9900**
5.	GASKET FOR PADDLE HANDLE	**9500/9200**
6.	LEFT HAND, TWO ROTOR LATCH WITH LEVER 'A'	**9500/2221**
	RIGHT HAND, TWO ROTOR LATCH WITH LEVER 'A'	**9500/2222**
7.	70-200 SERIES STRIKER BOLT (M12)	**9500/9102**

A range, robustly designed, to withstand the arduous conditions normally associated with both on or off-road vehicles and where doors are required to be fitted with the latch location separate from the activating handle.

Typical installation includes the 30-250 Series paddle handle, the 50-100 Series two rotor latch, the 70-200 Series striker bolt, connecting clips, linkage rods, mounting brackets and gasket.

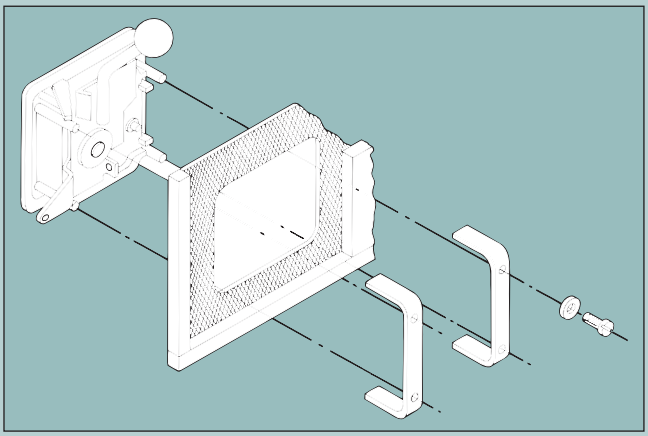

The paddle handle assembly is fitted with an inside release lever which eliminates much of the linkage usually required with conventional inside handles. Operator safety is assured in that the operator can exit the vehicle even if the door is locked from the exterior.

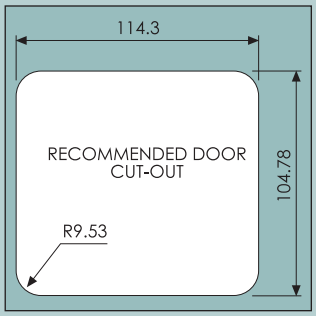

The simplified design also allows for a fast, simple and cost effective installation.

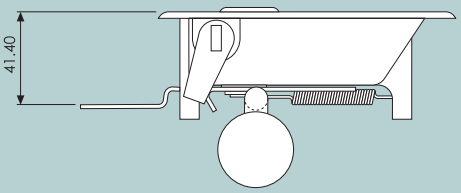

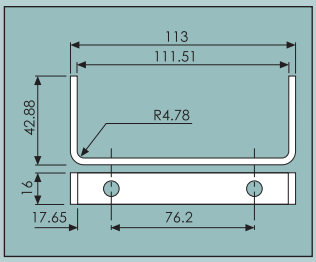

The paddle handle assembly comprises of a body of die-cast, zinc-alloy, finished in black, powder-coating; pivot components of zinc-plated steel; an integral release lever with an 'easy grip' black, plastic knob; and axle bushes and thrust washers of nylon for smooth operation.

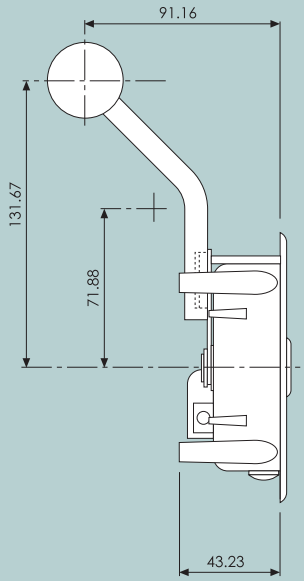

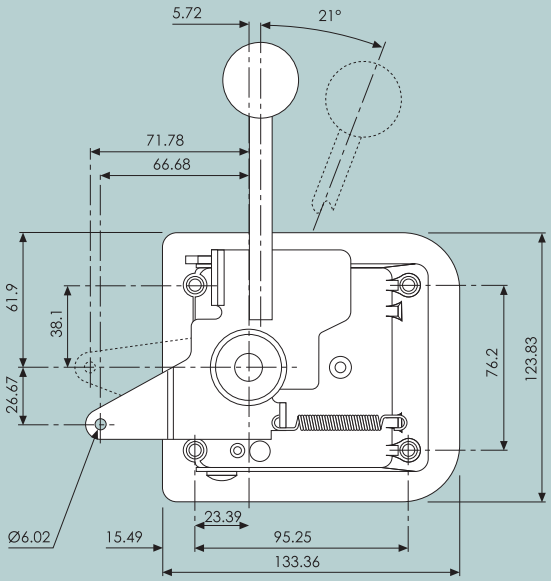

TriMark

Linkage Adjustment Procedure

When paddle handle and latch are vertically positioned with respect to each other, as illustrated, paddle-handle, pivot-plate travel matches the latch, trip-lever travel.

Latch and handle must always be positioned so that the latch, trip-lever is within the free travel range, identified as 'F' in the illustration, where no external forces are applied to the system.

The contact position, designated 'C' in the illustration, defines the upper limit of the free travel range and can be identified as the point where the trip lever first contacts the internal catch when the rotors are in the latched (closed) position.

When the rotors are in the unlatched position (door open), the trip lever will be in the release range 'R' when the trip-lever contacts the catch.

CAUTION: If linkage holds trip-lever in this position, door may stay shut but catch will not be fully engaged into the notches in the rotors and shock loads could cause the door to open.

NOTE: Any test to determine free travel of the linkage must be conducted with the rotors in the latched position and after the vertical position of the latch has been established.

The most conclusive test is to remove one of the linkage pins, cycle the latch and check for free travel with the rotors in the latched (closed) position.

If the pin cannot be installed without loading the linkage, further adjustment is required until adequate free travel is obtained.

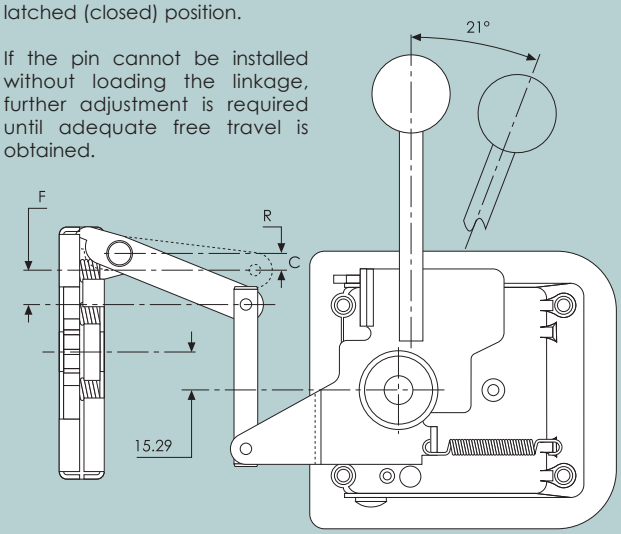

30~500 Series Pivoting~Catch, Compartment Latch

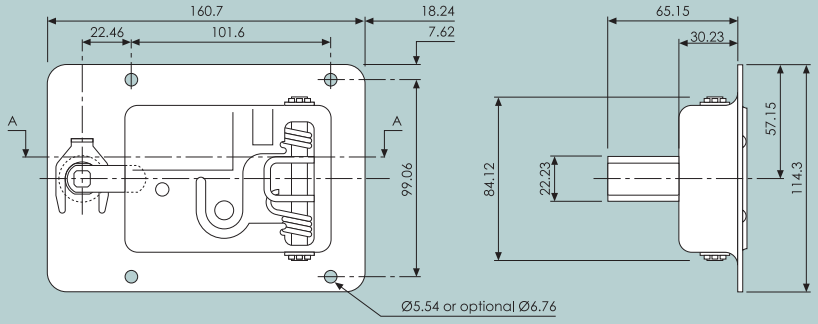

• PART NUMBERS • PART NUMBERS • PART NUMBERS •	
LATCH, BLACK POWDER COATED. (KEY LOCKING)	**9500/6003**

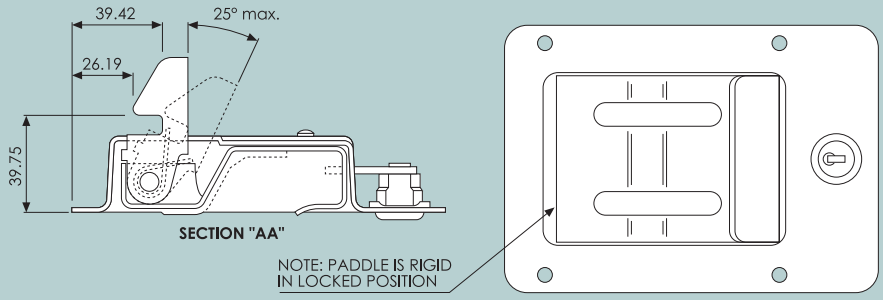

This rugged paddle latch is designed for use on storage compartment and access doors.

The reverse paddle design is ideally suited for top hinged doors and provides resistance to insertion of foreign objects. Other design features include a pivoting catch which for allows for any flexing between door and frame; and all internal components are spring loaded to minimise effects caused by vibration.

An all steel, reinforced construction gives an exceptionally tough assembly and can be supplied either black, powder-coated or zinc plate, gold passivated (for over painting). Both of which offer excellent resistance to corrosion.

Walsall: 01922 471000 Heywood: 01706 692110 Romsey: 01794 525870

www.albert-jagger.co.uk

10~600 Series, Flush~Mounted, Pop~up 'T' Handle

A stylish, flush-mounted, pop-up 'T' handle which is designed for use on canopy/high top doors and similar applications. It can also be used in conjunction with most standard rod-lock systems and cams.

This low-profile handle comprises of a die-cast, zinc-alloy body, finished in a black, powder coating a zinc-plate, steel drive -bar; two stainless steel internal springs and a stainless steel shuttered keyway.

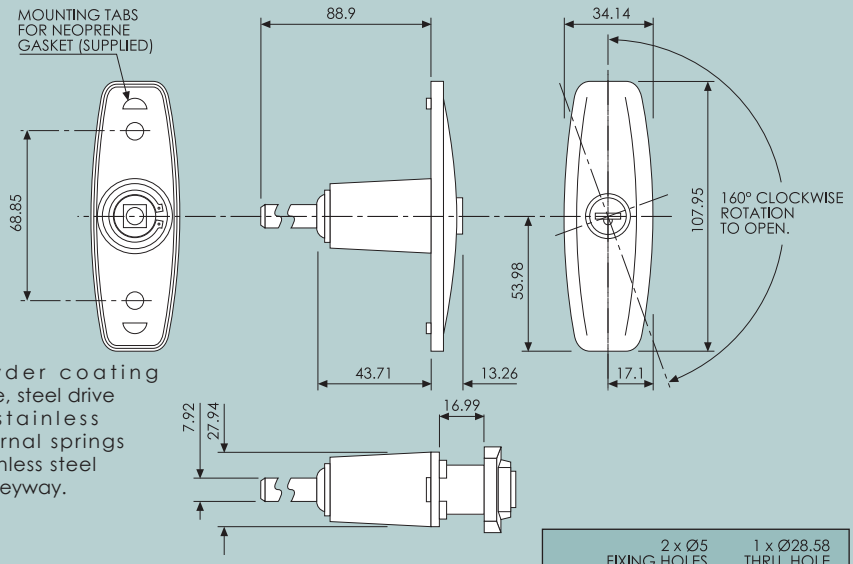

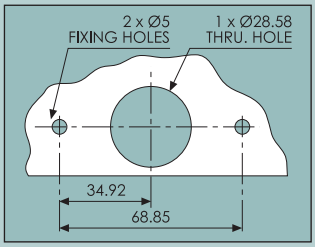

• PART NUMBERS • PART NUMBERS • PART NUMBERS •	
LEFT HAND, LOCKING, 90° ANTICLOCKWISE ROTATION.	**9500/8101**
RIGHT HAND, LOCKING, 90° CLOCKWISE ROTATION.	**9500/8102**
KIT OF TWO (AS ABOVE)	**9500/8104**
RIGHT HAND, LOCKING, 160° CLOCKWISE ROTATION.	**9500/8121**
DIE-CAST CAM TO SUIT (refer page d36 for details)	**9500/9500**

door &
window fittings

section

e

DOOR & WINDOW FITTINGS

DOOR RETAINERS e1-e7
CHECK STRAPS e8-e9
EMERGENCY DOOR GEAR e10-e13
DOOR GEAR e14-e23
WINDOW FITTINGS e24-e27
GLAZING ACCESSORIES e28-e30
EXTRUDED SEALS e31-e37
DOOR SEALS e38-e39
BRUSH SEAL e40

innovative latching & sealing systems

Industrilas

a reliable & resourceful partner

swing handles quarter turns hinges
seal profiles rod latch systems
compression latches paddle locks
handles toggle fasteners slam bolts

All products **ROHS-compliant** & certified according to both **ISO 9001:2008** & **EN14001:2004 by TÜV**.

Sealing Profiles

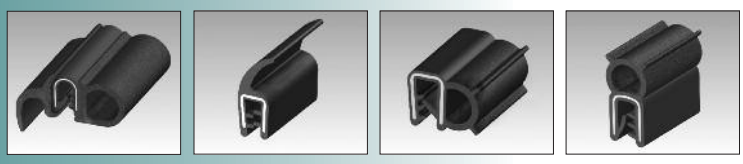

Swing Handles

Klima-flex™ VENTILATION SYSTEMS

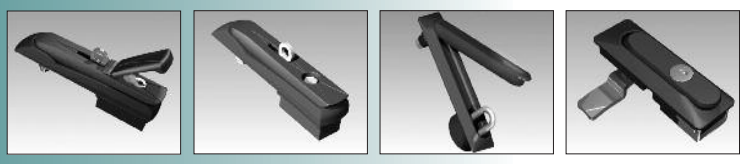

Hinges

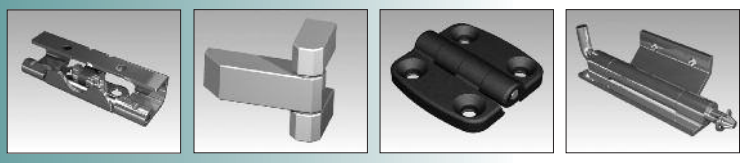

Handles

Vector™

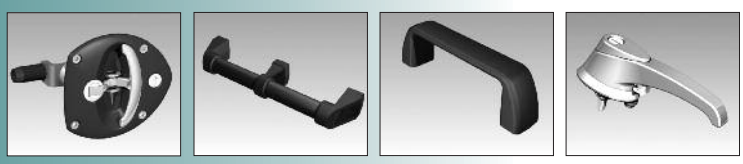

Quarter Turns

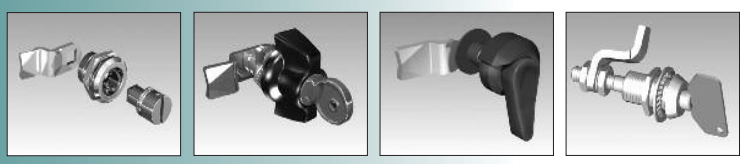

Rod Latch Systems

VISION™

Full product catalogue available on request
2D & 3D CAD models available for download
www.albert-jagger.co.uk

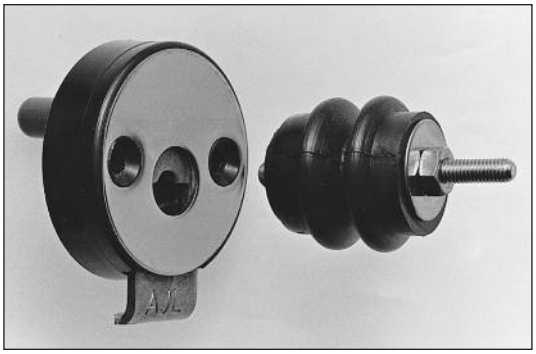

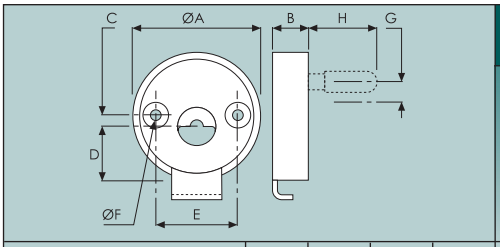

SERIES 500 FEMALE DOOR RETAINER

Polished stainless steel face-plate with a stainless steel release catch and spring encased by black, nylon 66 moulded body.

	A	B	C	D	E	F	G	H
0500/004	**Ext. & Int. release**				**Weight 120g/4.2oz**			
METRIC (mm)	*63*	*18*	*5*	*26*	*40*	*6*	*7*	*35*
IMPERIAL (ins)	*2.50*	*0.71*	*0.20*	*1.02*	*1.58*	*0.24*	*0.28*	*1.38*
0500/005	**Ext. release**				**Weight 110g/3.9oz**			
METRIC (mm)	*63*	*18*	*5*	*26*	*40*	*6*	*7*	
IMPERIAL (ins)	*2.50*	*0.71*	*0.20*	*1.02*	*1.58*	*0.24*	*0.28*	

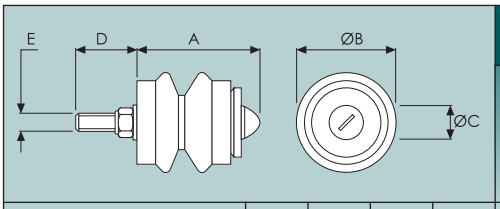

SERIES 500 MALE DOOR RETAINER

Spring loaded striker pin encased in black, nitrile bellows with an integral black nylon 66 impact washer.

	A	B	C	D	E	F	G	H
0500/003					**Weight 50g/1.8oz**			
METRIC (mm)	*45*	*38*	*12.5*	*23*	*M6*			
IMPERIAL (ins)	*1.77*	*1.50*	*0.50*	*0.91*				

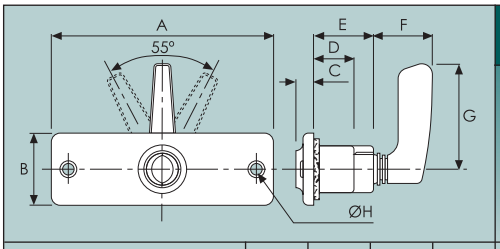

RECESSED DOOR RETAINER

Black powder-coated face plate with a black co-polymer acetal body and striker/ejector pad. Complete with hardened steel jaws. Supplied with striker pin (see below).

	A	B	C	D	E	F	G	H
0498/001					**Weight 190g/6.7oz**			
METRIC (mm)	*124*	*42*	*10*	*22*	*33*	*32*	*60*	*5.5*
IMPERIAL (ins)	*4.98*	*1.65*	*0.39*	*0.87*	*1.30*	*0.26*	*2.36*	*0.22*

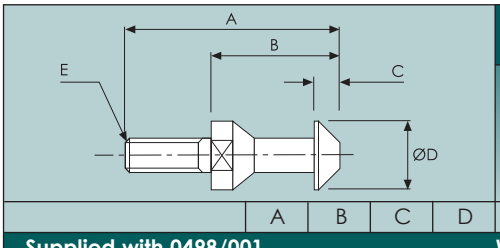

STRIKER PIN

For use with 0498/001. Zinc plated, hardened steel.

	A	B	C	D	E	F	G	H
Supplied with 0498/001					**Weight 60g/2.1oz**			
METRIC (mm)	*47*	*28*	*6*	*15*	*M8*			
IMPERIAL (ins)	*1.85*	*1.10*	*0.24*	*0.59*				

Door Retainers

RUBBER DOOR HOLDER	
Female	*Moulded-in steel fixing plate with plain or tapped M6 hole.*
Male	*Polypropylene with recessed hexagon to take M6 bolt.*
Dims.	*Female = 35mm (1.38") x Ø40mm (1.57")* *Male = 27mm (1.06") x Ø25mm (1")*

The figures given below are for guidance only, as large variations occur due to ambient conditions and applications.

MALE/FEMALE	RUBBER TYPE	FIXING HOLE TYPE	MINIMUM LOAD	TYPICAL LOAD	PART NUMBER
Female	*Hard (black)*	*Plain*	*20kg*	*25kg*	**0666/001**
Female	*Soft (black)*	*Plain*	*3kg*	*10kg*	**0774/001**
Female	*Soft (black)*	*Tapped, M6*	*3kg*	*10kg*	**0775/001**
Female	*Soft (blue)*	*Plain*	*3kg*	*8kg*	**0776/001**
Female	*Hard (black)*	*Tapped, M6*	*20kg*	*25kg*	**0777/001**
Female	*Soft (blue)*	*Tapped, M6*	*3kg*	*8kg*	**0778/001**
Male	*Polypropylene*	*Common to all females*			**0666/002**

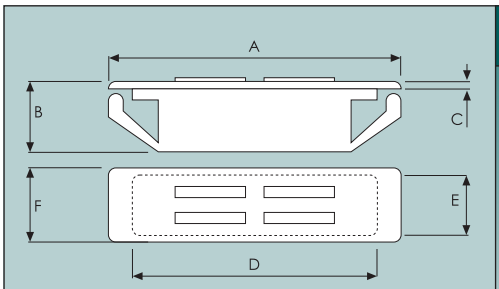

MAGNETIC CATCH

Push fit.
4 magnets encased in a polypropylene moulding.
NB: dimensions D & E represent cut out apertures.

	A	B	C	D	E	F	G	H
0538/3674	**Black (15kg pull force)**				**Weight 30g/1.1oz**			
METRIC (mm)	*54.0*	*16.0*	*1.50*	*51.5*	*10.8*	*12.5*		
IMPERIAL (ins)	*2.13*	*0.63*	*0.06*	*2.03*	*0.43*	*0.49*		
0538/4015	**White (5kg pull force)**				**Weight 10g/0.4oz**			
METRIC (mm)	*39.5*	*13.0*	*1.00*	*35.0*	*8.20*	*10*		
IMPERIAL (ins)	*1.56*	*0.51*	*0.04*	*1.38*	*0.32*	*0.39*		

Top: 0538/3674 *Bottom: 0538/4015*

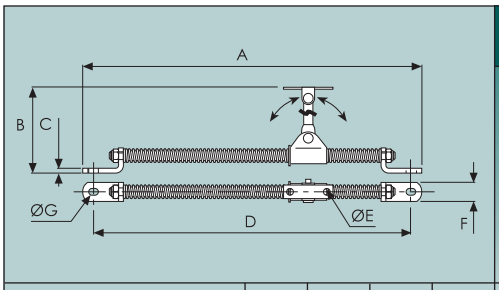

DOOR PROP

Spring loaded mechanism.
304 grade stainless steel through-out.

	A	B	C	D	E	F	G	H
1231/0010					**Weight 500g/1.1lb**			
METRIC (mm)	*350*	*326*	*5*	*330*	*7*	*19*	*7*	
IMPERIAL (ins)	*13.8*	*12.8*	*0.20*	*13.0*	*0.26*	*0.75*	*0.28*	

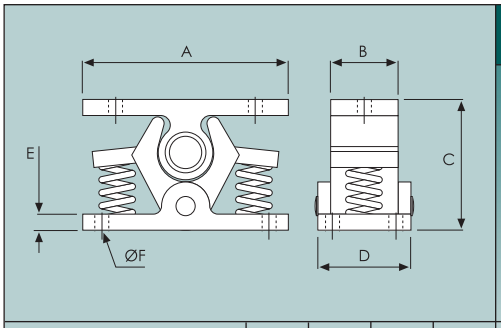

DOOR RETAINER

304 stainless steel.

	A	B	C	D	E	F	G	H
2132/1000					**Weight 230g/8.1oz**			
METRIC (mm)	*64.0*	*19.0*	*40.0*	*29.0*	*5.00*	*4.30*		
IMPERIAL (ins)	*2.52*	*0.75*	*1.58*	*1.14*	*0.20*	*0.17*		

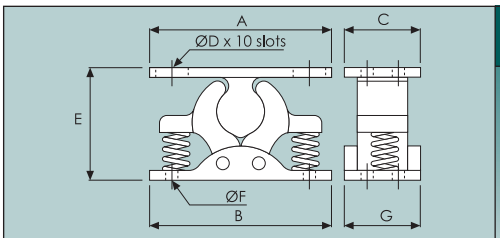

DOOR RETAINER

Double rivet type.
Malleable iron casting, with a zinc plate finish.

	A	B	C	D	E	F	G	H
2132/003	**Male**				**Weight 80g/2.8oz**			
2132/004	**Female**				**Weight 150g/5.3oz**			
METRIC (mm)	*67*	*67*	*26*	*5.5*	*44*	*4.5*	*26*	
IMPERIAL (ins)	*2.64*	*2.64*	*1.02*	*0.22*	*1.73*	*0.18*	*1.02*	

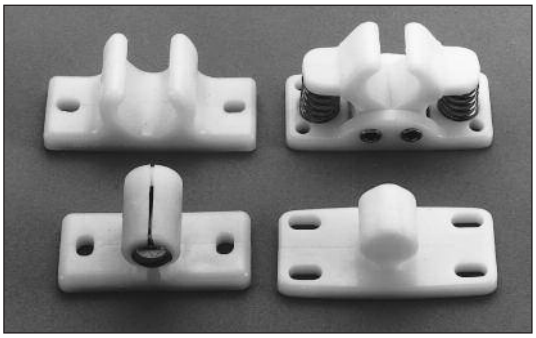

Top left: 0555/001
Bottom left: 0555/002
Right: 0556/001

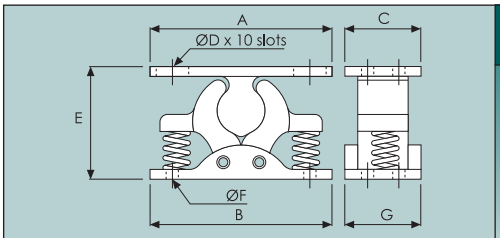

DOOR RETAINER

Double rivet type.
White nylon.

	A	B	C	D	E	F	G	H
0556/001	**Complete assembly**				**Weight 50g/1.8oz**			
METRIC (mm)	*65*	*65*	*29*	*4.5*	*43*	*4.5*	*29*	
IMPERIAL (ins)	*2.56*	*2.56*	*1.14*	*0.18*	*1.70*	*0.18*	*1.14*	

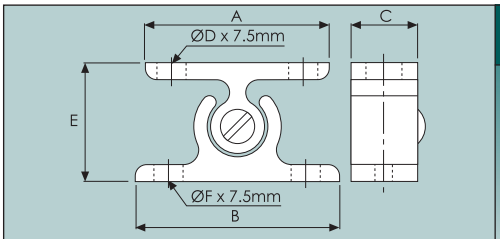

DOOR RETAINER

Adjustable grip.
White nylon.

	A	B	C	D	E	F	G	H
0555/001	**Female, white**				**Weight 20g/0.7oz**			
0555/002	**Male, white**				**Weight 20g/0.7oz**			
0555/003	**Male, black**				**Weight 20g/0.7oz**			
0555/004	**Female, black**				**Weight 20g/0.7oz**			
METRIC (mm)	*57*	*67*	*25.4*	*5.5*	*41*	*5.5*		
IMPERIAL (ins)	*2.24*	*2.64*	*1.00*	*0.22*	*1.61*	*0.22*		

Door Retainers

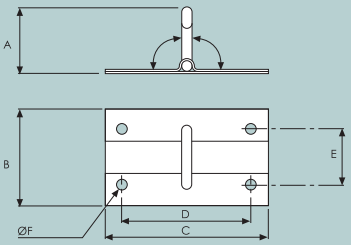

DOOR RETAINER HOOK

Wire hook for use with 0541/002 retainer.
Pressed 304 stainless steel.

	A	B	C	D	E	F	G	H
0541/001					**Weight 70g/2.5oz**			
METRIC (mm)	*101*	*44.0*	*76.0*	*59.0*	*26.0*	*5.00*		
IMPERIAL (ins)	*3.98*	*1.73*	*2.99*	*2.32*	*1.02*	*0.20*		
0541/003	**Plastic back-plate**				**Weight 10g/0.4oz**			
For use with 0541/001 and 0541/002.								

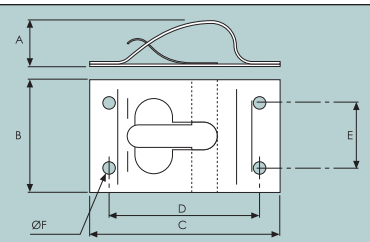

DOOR RETAINER CATCH PLATE

Hook retainer for use with 0541/001 wire hook.
Pressed 304 stainless steel.

	A	B	C	D	E	F	G	H
0541/002					**Weight 50g/1.8oz**			
METRIC (mm)	*18.0*	*44.0*	*76.0*	*59.0*	*26.0*	*5.00*		
IMPERIAL (ins)	*0.71*	*1.73*	*2.99*	*2.32*	*1.02*	*0.20*		

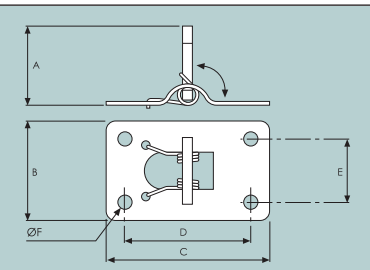

DOOR RETAINER HOOK

Spring loaded.
Pressed stainless steel.
For use with 9810/3370 retainer.

	A	B	C	D	E	F	G	H
9810/3350	**Hook**				**Weight 60g/2.1oz**			
METRIC (mm)	*93.0*	*40.0*	*66.0*	*50.0*	*24.0*	*5.00*		
IMPERIAL (ins)	*3.66*	*1.58*	*2.60*	*1.97*	*0.95*	*0.20*		
9810/3390	**Plastic back-plate**				**Weight 10g/0.4oz**			
For use with 9810/3350 and 9810/3370.								

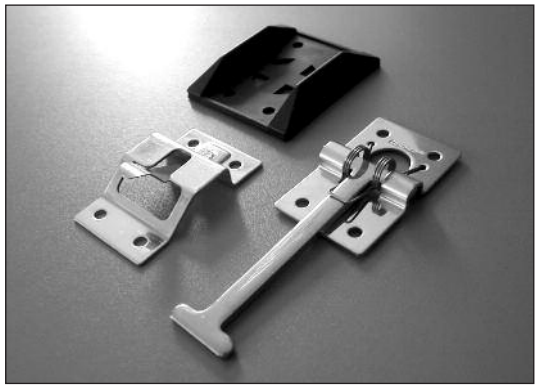

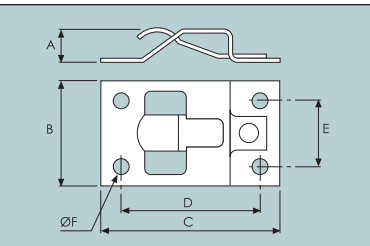

DOOR RETAINER CATCH PLATE

Pressed stainless steel.
For use with 9810/3350 hook.

	A	B	C	D	E	F	G	H
9810/3370					**Weight 30g/1.1oz**			
METRIC (mm)	*12.0*	*40.0*	*66.0*	*50.0*	*24.0*	*5.00*		
IMPERIAL (ins)	*0.47*	*1.58*	*2.60*	*1.97*	*0.95*	*0.20*		

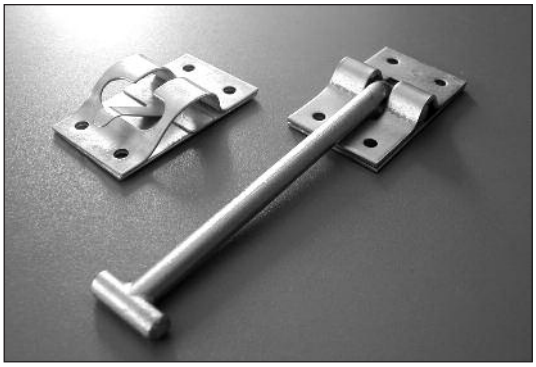

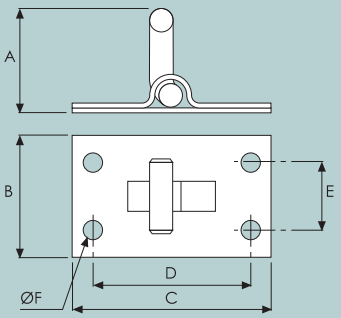

DOOR RETAINER HOOK

Zinc-plated, cast, malleable iron hook with a zinc plated, pressed steel back-plate.

		A	B	C	D	E	F	G	H
0550/001						**Weight 160g/5.7oz**			
METRIC	*(mm)*	*105*	*45*	*77*	*59*	*25.4*	*5.5*		
IMPERIAL	*(ins)*	*4.13*	*1.77*	*3.03*	*2.32*	*1.00*	*0.22*		
0553/001						**Weight 200g/7.1oz**			
METRIC	*(mm)*	*155*	*45*	*77*	*59*	*25.4*	*5.5*		
IMPERIAL	*(ins)*	*6.10*	*1.77*	*3.03*	*2.32*	*1.00*	*0.22*		

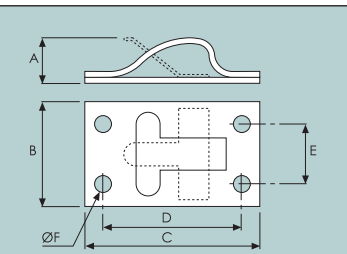

DOOR RETAINER CATCH PLATE

Zinc-plated, pressed steel.
For use with 0550/001 & 0553/001.

		A	B	C	D	E	F	G	H
0554/001	**Without spring**					**Weight 80g/2.8oz**			
0551/001	**With spring**								
METRIC	*(mm)*	*18*	*45*	*77*	*59*	*25.4*	*5.5*		
IMPERIAL	*(ins)*	*0.71*	*1.77*	*3.03*	*2.32*	*1.00*	*0.22*		

CABIN HOOK		
2682/106	**Black japanned**	**Weight 150g/5.3oz**
	152.4mm (6") hook complete with retainer.	
2682/108	**Black japanned**	**Weight 160g/5.7oz**
	203mm (8") hook complete with retainer.	

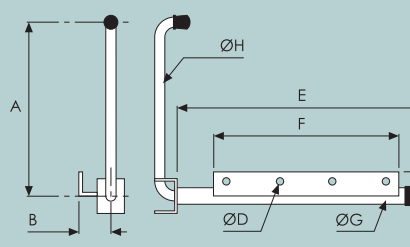

TROMBONE DOOR RETAINER

Zinc plated steel.
Extension of 300mm (11.8")

		A	B	C	D	E	F	G	H
0835/002	**Left hand (shown)**					**Weight 2.5kg/5.5lb**			
0835/003	**Right hand**								
METRIC	*(mm)*	*325*	*55*	*42*	*8*	*465*	*350*	*25*	*14*
IMPERIAL	*(ins)*	*12.8*	*2.17*	*1.65*	*0.32*	*18.3*	*13.8*	*0.98*	*0.55*

Door Retainers

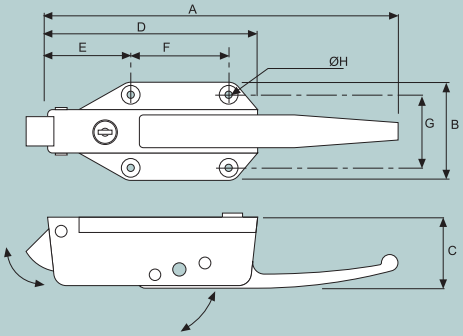

REFRIGERATOR DOOR LOCK

Radial tongue action which rolls smoothly & securely into place.
High pressure, zinc die-cast components with a malleable iron handle.
Excellent frost resistance.
Lockable via integral key cylinder with two keys supplied (keyed alike) or via padlock (not supplied).
Non shuttered key barrel, intended for internal use only.

	A	B	C	D	E	F	G	H
2053/190	**Polished Chrome**				**Weight 1.2kg/2.7lb**			
2053/193	**'Tuffkote'**				**Weight 1.2kg/2.7lb**			
METRIC (mm)	*262*	*71.4*	*56*	*158*	*57.2*	*77.8*	*52.4*	*6.8*
IMPERIAL (ins)	*10.3*	*2.81*	*2.21*	*6.22*	*2.25*	*3.06*	*2.06*	*0.27*

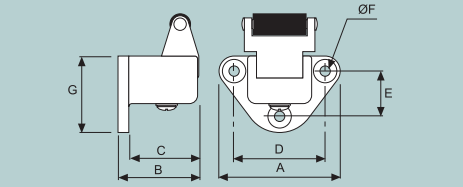

ADJUSTABLE ROLLER STRIKER

High-pressure, zinc die-cast coomponents with roller striker for smooth locking action.
Adjustable offset between 3.2mm & 6.4mm

	A	B	C	D	E	F	G	H
2053/191	**Polished Chrome**				**Weight 320g/11.3oz**			
2053/194	**'Tuffkote'**				**Weight 320g/11.3oz**			
METRIC (mm)	*75*	*52*	*44*	*55.6*	*28.6*	*6.8*	*48*	
IMPERIAL (ins)	*2.95*	*2.05*	*1.73*	*2.19*	*1.13*	*0.27*	*1.89*	

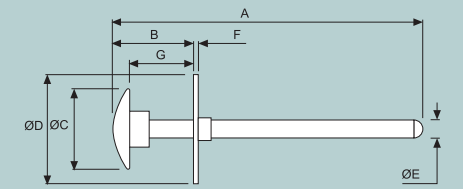

PANIC RELEASE BUTTON

Facilitates opening from inside regardless of locking mechanism, ie. keys or padlock.
Luminous button with a 'Kasonized' steel rod & flange.Mounting via 3 x Ø5mm holes.

	A	B	C	D	E	F	G	H
2053/192	**Panic release button**				**Weight 320g/11.3oz**			
METRIC (mm)	*220*	*56*	*56*	*76*	*12.5*	*3.0*	*40*	
IMPERIAL (ins)	*8.66*	*2.20*	*2.20*	*2.99*	*0.49*	*0.12*	*1.58*	

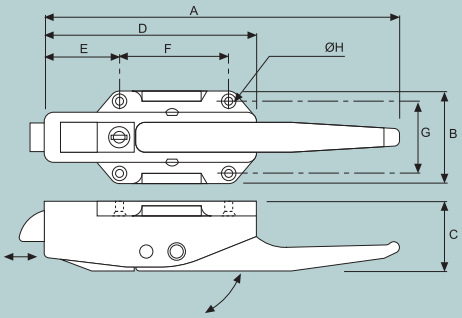

REFRIGERATOR DOOR LOCK

Slam action.
Supplied complete with a striker suitable for flush fitting door, and panic release button.
The latch mechanism consists of a high pressure, zinc die-casting with a highly polished chrome finish.
Lockable (keyed alike) via integral key cylinder with two keys supplied or via padlock (not supplied). Non shuttered key barrel, intended for internal use only.

	A	B	C	D	E	F	G	H
2053/135	**Complete assembly**				**Weight 1.8kg/4lb**			
METRIC (mm)	*270*	*69*	*50*	*157*	*56*	*78*	*52*	*6.2*
IMPERIAL (ins)	*10.63*	*2.72*	*1.97*	*6.18*	*2.21*	*3.07*	*2.05*	*0.24*

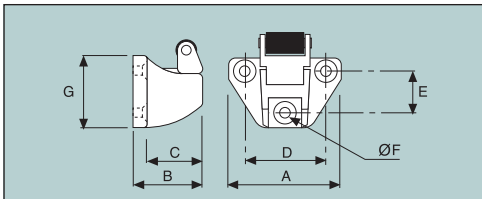

ADJUSTABLE ROLLER STRIKER

Striker suitable for flush fitting door.
High-pressure, zinc die-casting with a highly polished chrome finish.

	A	B	C	D	E	F	G	H
Striker								
METRIC (mm)	*72*	*50*	*40*	*56*	*28*	*6.2*	*50*	
IMPERIAL (ins)	*2.84*	*1.97*	*1.58*	*2.21*	*1.10*	*0.24*	*1.97*	

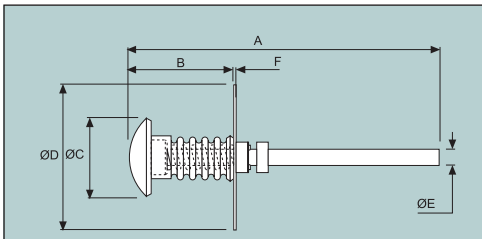

PANIC RELEASE BUTTON

Facilitates opening from inside regardless of locking mechanism, ie. keys or padlock.
Luminous button with a stainless steel fixing flange.
Stainless steel spring housed within a rubber bellows.

	A	B	C	D	E	F	G	H
Panic release button								
METRIC (mm)	*264*	*94*	*56*	*78*	*12.5*	*1.0*		
IMPERIAL (ins)	*10.39*	*3.70*	*2.21*	*3.07*	*0.49*	*0.04*		

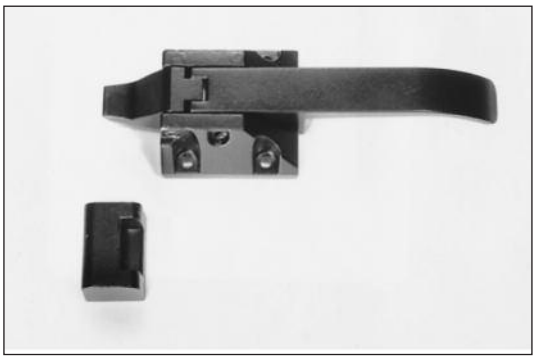

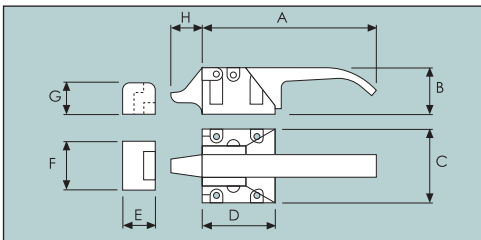

PLANT-ON OVERCENTRE LATCH

Die-cast with a black, powder coated finish.
Action pulls-in on closing and ejects on opening.

	A	B	C	D	E	F	G	H
9341/004	**Latch**				**Weight 480g/1.1lb**			
METRIC (mm)	*126*	*32*	*52*	*52*	*22*	*33*	*22*	*22*
IMPERIAL (ins)	*4.96*	*1.26*	*2.05*	*2.05*	*0.87*	*1.30*	*0.87*	*0.87*
9341/005	**Keeper**				**Weight 20g/0.7oz**			

Check Straps

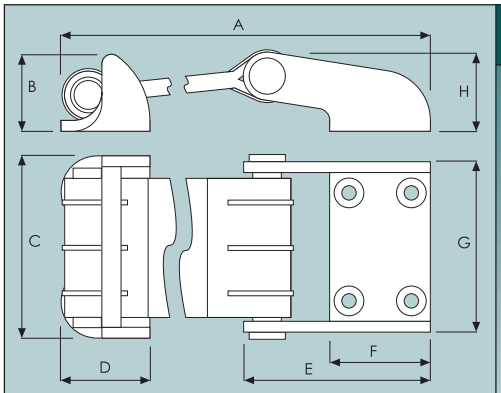

CHECK STRAP

Reinforced rubber strap with zinc plated steel brackets & chrome pins.

	A	B	C	D	E	F	G	H
0783/270					**Weight 630g/1.4lb**			
METRIC (mm)	*320*	*33.0*	*76.0*	*38.0*	*78.0*	*43.0*	*72.0*	*34.0*
IMPERIAL (ins)	*12.6*	*1.30*	*2.99*	*1.50*	*3.07*	*1.69*	*2.84*	*1.34*

REINFORCED RUBBER CHECK STRAP		
0783/001	**Complete assembly**	**Weight 400g/14.1oz**
	Consists of:	
0783/002	**Strap**	**Weight 150g/5.3oz**
	Black rubber (1 off)	
0783/003	**Bracket**	**Weight 70g/2.5oz**
	Aluminium casting (2 off)	
0783/006	**Sleeve (to fit 009)**	**Weight 5g/0.2oz**
	Laminated tufnol (2 off)	
0783/009	**Collar & pin**	**Weight 50g/1.8oz**
	Chrome plated steel	

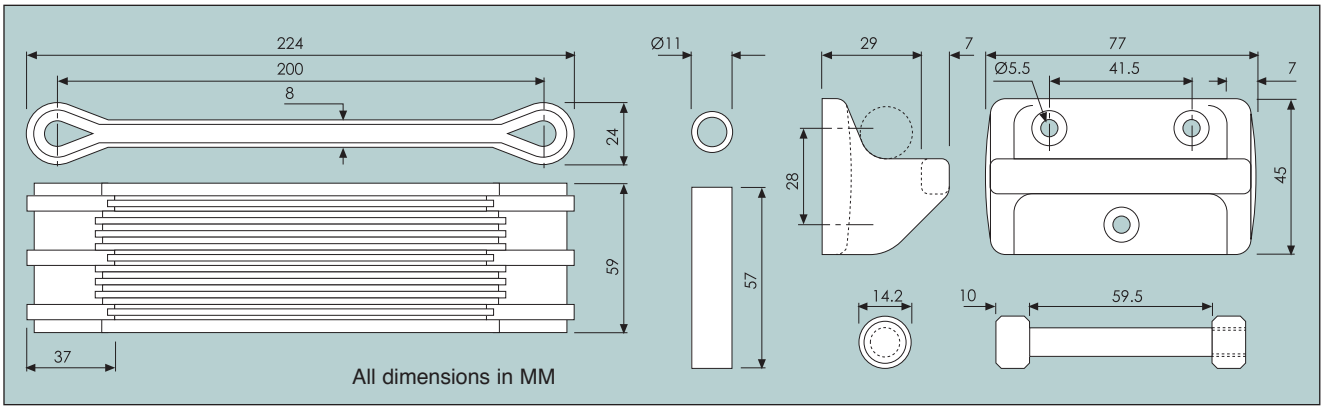

Check Straps

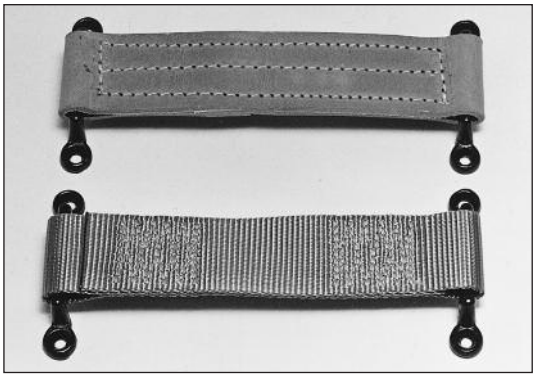

Top: 4279/001 Bottom: 4232/001

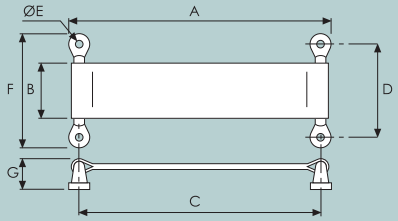

CHECK STRAP

Complete assemblies with malleable iron, black japanned staples.
Other sizes available on request.

	A	B	C	D	E	F	G	H
4279/001	**Leather strap**				**Weight 120g/4.2oz**			
METRIC (mm)	*203*	*44*	*190*	*74*	*5.5*	*90*	*22*	
IMPERIAL (ins)	*8.00*	*1.70*	*7.50*	*3.00*	*0.22*	*3.54*	*0.87*	
4232/001	**Stitched webbing**				**Weight 100g/3.5oz**			
METRIC (mm)	*208*	*44*	*210*	*74*	*5.5*	*90*	*22*	
IMPERIAL (ins)	*8.20*	*1.70*	*8.3*	*3.00*	*0.22*	*3.54*	*0.87*	

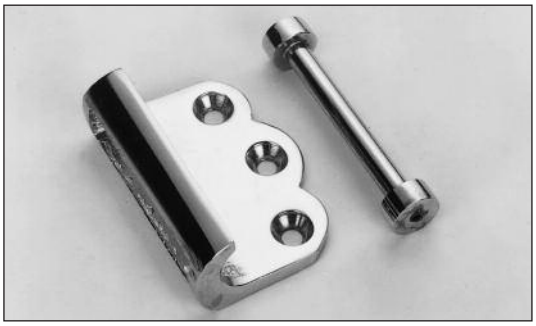

CHECK STRAP BRACKET AND PIN		
2180/001	**To suit 50mm (2") strap**	**Weight 110g/3.9oz**
	Chrome plate on brass bracket with chrome plate on steel pin.Can be made up to any length of leather strap.	

DETACHABLE CHECK STRAPS		
4232/6168	**Stitched webbing**	**Weight 100g/3.5oz**
	135mm (5.3") x 44mm (1.7") c/w snap hook	
2173/001	**Staple**	**Weight 30g/1.1oz**
	Black japanned, malleable iron casting.	

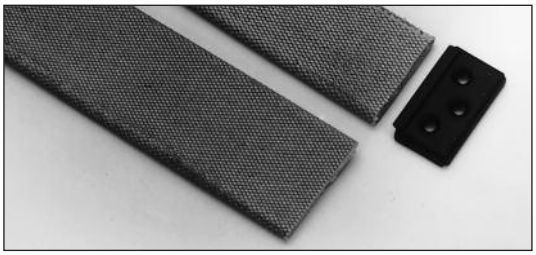

BALATA BELTING (sold per metre)		
0782/001	**44mm (1.7") wide**	**Weight 250g/8.8oz**
	4 ply	
0782/002	**50mm (2") wide**	**Weight 285g/10.1oz**
	4 ply	
0862/001	**End plate**	**Weight 20g/0.7oz**
	44mm (1.7") wide	

Emergency Door Gear

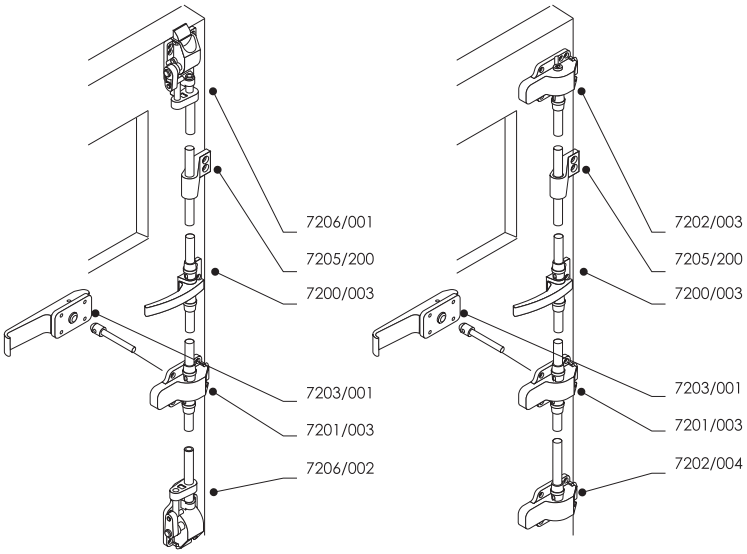

emergency door gear

A range of emergency door gear which has been developed to meet the vehicle industry's specific requirements for ergonomically engineered products, that reflect todays advanced vehicle environments. The extensive range of components offer the designer greater versatility with the added advantage of immediate availability.

Utilizing the latest materials and manufacturing technology, a combination of strength and style is achieved by using reinforced polyamide and good aesthetic design.

With simple geometric styling enlivened with subtle curves the emergency door gear, particularly the handles, are comfortable to use and reassuringly robust.

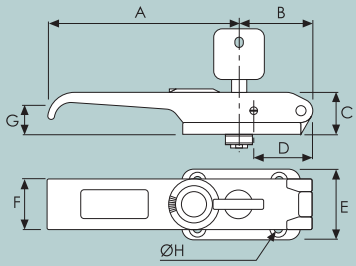

EXTERIOR HANDLE

Black, glass-fibre polyamide body with zinc-plated, steel components.
Can be fitted left or right hand, horizontally or vertically.

	A	B	C	D	E	F	G	H
7203/001	**Non locking**				**Weight 80g/2.8oz**			
7203/002	**Locking**							
METRIC (mm)	*104*	*52*	*26*	*35*	*43*	*28.5*	*20*	*5.2*
IMPERIAL (ins)	*4.10*	*2.05*	*1.02*	*1.38*	*1.69*	*1.12*	*0.79*	*0.21*
7204/001	**55mm exterior linkage kit**							
	For panels 34 to 46mm thick							
7204/002	**65mm exterior linkage kit**							
	For panels 43 to 56mm thick							

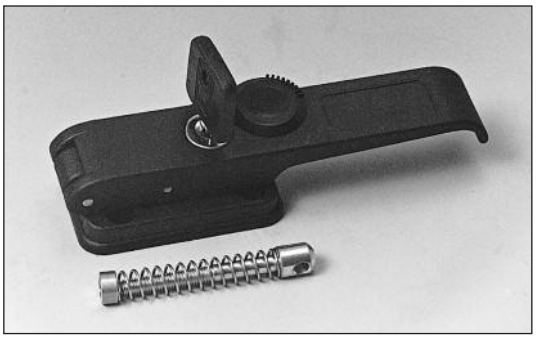

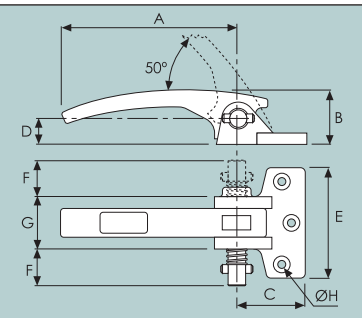

INTERIOR HANDLE

Black, glass-fibre polyamide with zinc-plated, steel components.

	A	B	C	D	E	F	G	H
7200/001	**Type 'B' (shown)**				**Weight 100g/3.5oz**			
7200/002	**Type 'A'**							
7200/003	**Centre mount**							
METRIC (mm)	*110*	*32*	*43*	*16*	*70.5*	*22*	*34*	*5.2*
IMPERIAL (ins)	*4.33*	*1.26*	*1.69*	*0.63*	*2.78*	*0.87*	*1.34*	*0.21*

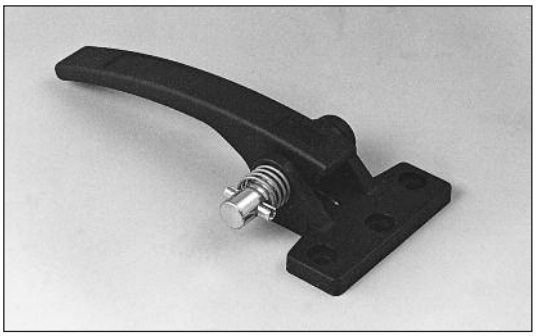

7200/001 - Interior handle, type 'B'.

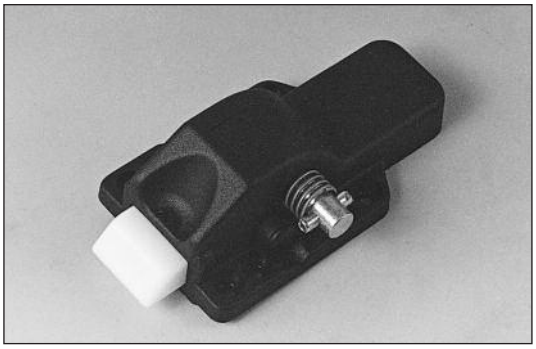

7202/001 - Horizontal end slam, type 'B'

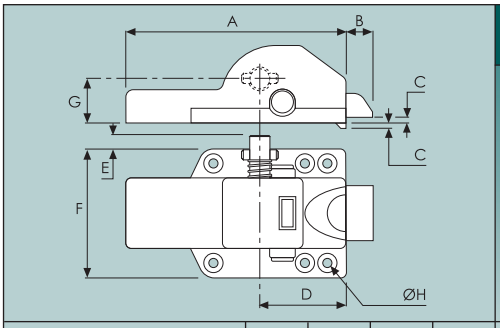

HORIZONTAL END SLAM

Black, glass-fibre polyamide body with a acetalic resin striker. Zinc-plated, steel components.

	A	B	C	D	E	F	G	H
See part number below					**Weight 210g/7.4oz**			
METRIC (mm)	*121*	*16*	*3*	*47*	*4.5*	*69*	*23*	*5.2*
IMPERIAL (ins)	*4.76*	*0.63*	*0.12*	*1.85*	*0.18*	*2.72*	*0.91*	*0.21*
7202/001	**Type 'B' (shown)**							
	With exterior linkage facility.							
7202/002	**Type 'A'**							
	With exterior linkage facility.							
7202/003	**Type 'A'**				**Weight 210g/7.4oz**			
	Without exterior linkage facility.							
7202/004	**Type 'B'**							
	Without exterior linkage facility							

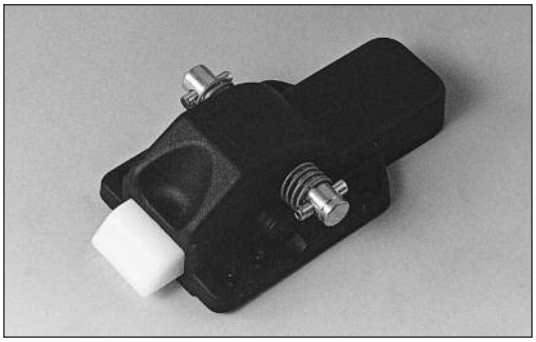

7201/001 - Centre slam

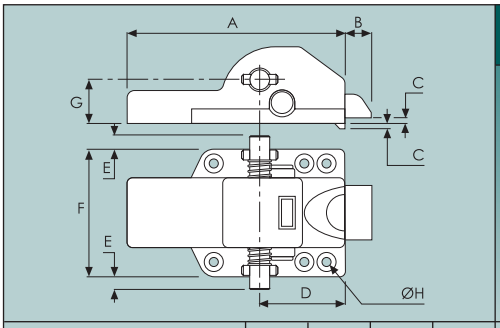

HORIZONTAL CENTRE SLAM

Black, glass-fibre polyamide body with a acetalic resin striker. Zinc-plated, steel components.

	A	B	C	D	E	F	G	H
See part number below					**Weight 210g/7.4oz**			
METRIC (mm)	*121*	*16*	*3*	*47*	*4.5*	*69*	*23*	*5.2*
IMPERIAL (ins)	*4.76*	*0.63*	*0.12*	*1.85*	*0.18*	*2.72*	*0.91*	*0.21*
7201/001	**Centre slam (shown)**							
	Without exterior linkage facility.							
7201/003	**Centre slam**							
	With exterior linkage facility.							

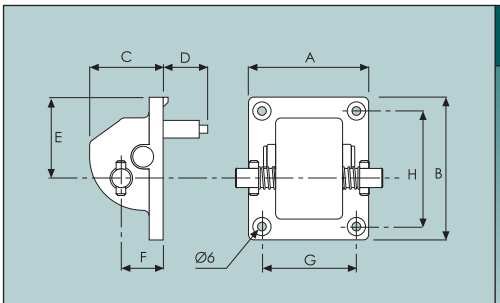

DRIVE ROD CONNECTOR

With exterior linkage facility.
For use with vertical drive rods.
Black, glass-fibre polyamide body with Zinc-plated, steel components.

	A	B	C	D	E	F	G	H
7201/004					**Weight 190g/6.7oz**			
METRIC (mm)	*69*	*82*	*42*	*36*	*48*	*23*	*52*	*63*
IMPERIAL (ins)	*2.72*	*3.23*	*1.65*	*1.42*	*1.89*	*0.91*	*2.05*	*2.48*

Emergency Door Gear

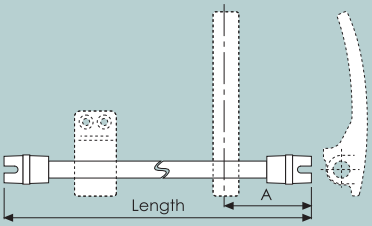

DRIVE RODS

For horizontal slams. Black, painted steel with two glass-fibre polyamide, rod-end couplings.

7205/001	**570mm drive rod**	**Weight 120g/4.2oz**
	Complete with mounting bracket	
7205/002	**360mm drive rod**	**Weight 110g/3.9oz**
7205/003	**413mm drive rod**	**Weight 190g/6.7oz**
7205/004	**780mm drive rod**	**Weight 310g/11oz**
	Supplied with 1 rod-end coupling only.	
7205/008	**762mm drive rod**	**Weight 240g/8.5oz**
	With interior handle fixed at 72mm/2.84" (dim A)	
7205/009	**780mm drive rod**	**Weight 250g/8.8oz**
	With interior handle fixed at 72mm/2.84" (dim A)	

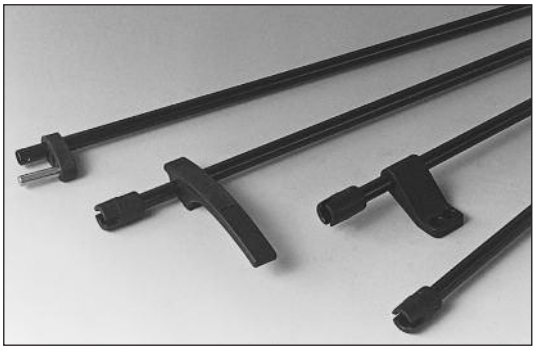

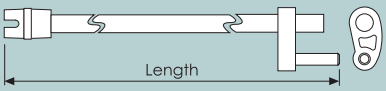

DRIVE RODS

Black, painted steel with one standard rod-end coupling and one drive coupling to suit vertical slams (see below).

7205/005	**895mm, type 'A'**	**Weight 290g/10.2oz**
7205/006	**895mm, type 'B'**	**Weight 290g/10.2oz**

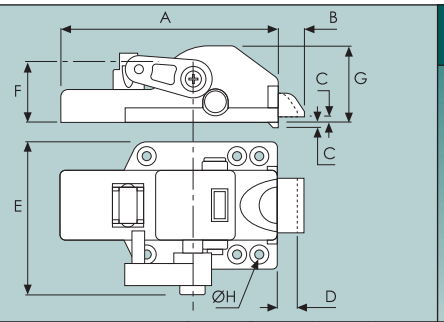

VERTICAL END SLAMS

Black, glass-fibre polyamide body with a acetalic resin striker. Zinc-plated, steel components.

		A	B	C	D	E	F	G	H
7206/001	**Type 'A'**					**Weight 210g/7.4oz**			
7206/002	**Type 'B' (shown)**								
METRIC	*(mm)*	*121*	*16*	*3*	*6*	*86*	*27*	*42*	*5.2*
IMPERIAL	*(ins)*	*4.76*	*0.63*	*0.12*	*0.24*	*3.39*	*1.06*	*1.65*	*0.21*

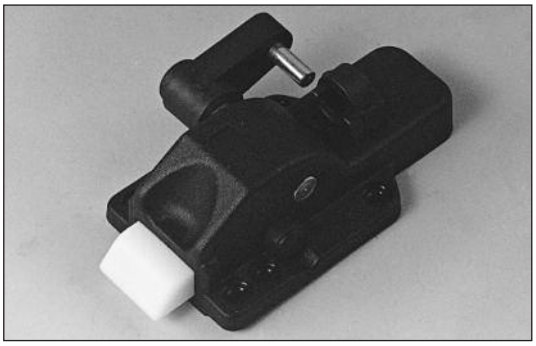

7206/002 - Vertical end slam

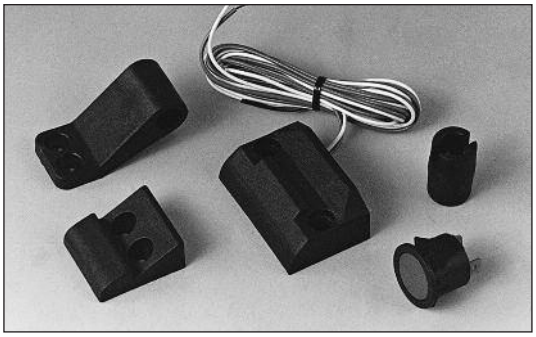

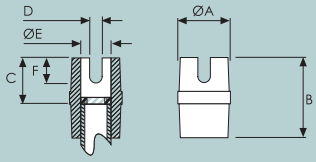

DRIVE-ROD END-COUPLING

Black, glass-fibre polyamide.

	A	B	C	D	E	F	G	H
7205/100					**Weight 10g/0.4oz**			
METRIC (mm)	*20.5*	*32.0*	*17.0*	*5.00*	*11.5*	*11.0*		
IMPERIAL (ins)	*0.81*	*1.26*	*0.67*	*0.20*	*0.45*	*0.43*		

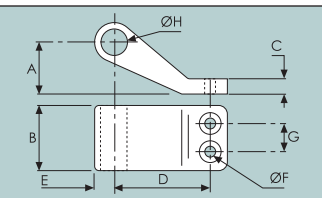

DRIVE-ROD MOUNTING BRACKET

Black, glass-fibre polyamide.

	A	B	C	D	E	F	G	H
7205/200					**Weight 20g/0.7oz**			
METRIC (mm)	*23*	*29.5*	*7*	*43*	*8*	*5.2*	*13*	*12*
IMPERIAL (ins)	*0.91*	*1.16*	*0.27*	*1.69*	*0.32*	*0.21*	*0.51*	*0.47*

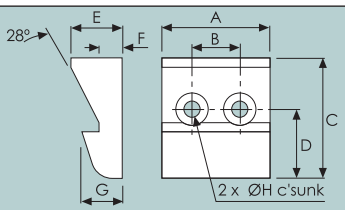

STRIKER

Black, glass-fibre polyamide.

	A	B	C	D	E	F	G	H
7205/050					**Weight 10g/0.4oz**			
METRIC (mm)	*36*	*16*	*40*	*23.5*	*17*	*7*	*12.5*	*5.2*
IMPERIAL (ins)	*1.42*	*1.02*	*1.58*	*0.93*	*0.67*	*0.28*	*0.49*	*0.21*

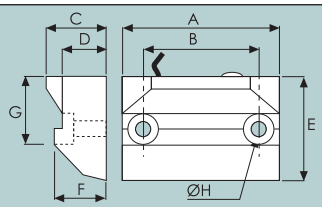

STRIKER WITH MICRO-SWITCH

Black, glass-fibre polyamide.

	A	B	C	D	E	F	G	H
7205/051					**Weight 60g/2.1oz**			
METRIC (mm)	*61*	*45*	*23*	*17*	*40*	*20*	*27*	*5.2*
IMPERIAL (ins)	*2.40*	*1.77*	*0.91*	*0.67*	*1.58*	*0.79*	*1.06*	*0.21*

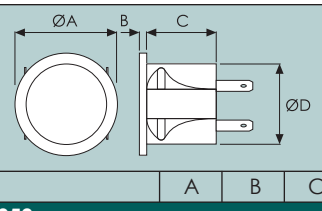

DRIVERS WARNING LIGHT

Various plastics.

	A	B	C	D	E	F	G	H
7205/052					**Weight 10g/0.4oz**			
METRIC (mm)	*28*	*2*	*19*	*23*				
IMPERIAL (ins)	*1.10*	*0.08*	*0.75*	*0.91*				

Door Gear

CENTAUR LIGHTWEIGHT, BOLT-ON DOOR GEAR - UNBUSHED		
	For Ø21.1mm tubing (see below)	
1-15/001	**Left hand door gear**	**Weight 1.8kg/4lb**
	Zinc plated	
1-15/002	**Right hand door gear**	**Weight 1.8kg/4lb**
	Zinc plated	
Kit comprises of:		
	2 x universal keepers	
	1 x right hand cam	
	1 x left hand cam	
	3 x outer tube guide supports	
	3 x inner tube guide supports	
	2 x anti-rack collars	
	1 x retainer plate	
	1 x bush	
	1 x swivel catch	
	1 x rivet	
	1 x lever mount	
	1 x lever handle (left or right hand)	
1-15/005	**Galvanised steel tubing - Ø21.1mm**	
	2.4m (8') long, 2.6mm wall thickness	

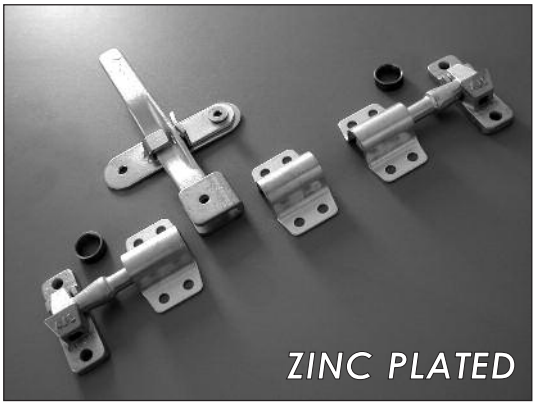

1-15/001 left hand shown suitable for Ø21.1mm tube

UNIVERSAL LIGHTWEIGHT, BOLT-ON DOOR GEAR - UNBUSHED		
	For Ø22mm tubing (see below)	
1999/01000	**Universal door gear**	**Weight 2.4kg/5.3lb**
	304 stainless steel	
Kit comprises of:		
	2 x universal keepers	
	2 x universal cams	
	2 x anti rack rings	
	3 x outer tube guide supports (zinc plated steel)	
	3 x inner tube guide supports (nylon)	
	3 x outer tube guide back plates	
	1 x forged handle	
	1 x lever mount	
	1 x rivet	
	1 x retainer plate	
	1 x swivel catch	
	1 x bush	
1999/018	**304 Stainless steel tubing - Ø22mm**	
	3.0m (8') long, 1.5mm wall thickness	

Universal Door Gear suitable for Ø22mm Tube

UNIVERSAL, BOLT-ON DOOR GEAR - BUSHED		
	For Ø22mm tubing (see below)	
2004/100	**Universal door gear**	**Weight 2.2kg/4.9lb**
	304 stainless steel	
Kit comprises of:		
	2 x universal keepers	
	2 x universal cams	
	2 x anti rack rings	
	3 x outer tube guide supports	
	3 x black nylon bushes	
	1 x pressed handle (dipped plastic grip)	
	1 x lever mount	
	1 x rivet	
	1 x handle retainer assembly	
1999/018	**304 Stainless steel tubing - Ø22mm**	
	3.0m (8') long, 1.5mm wall thickness	

Universal Door Gear suitable for Ø22mm Tube

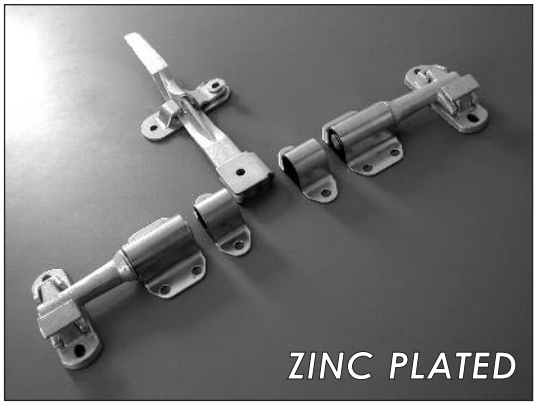

Universal Door Gear suitable for Ø27mm Tube

UNIVERSAL, BOLT-ON DOOR GEAR - UNBUSHED		
	For Ø27mm tubing (see below)	
2000/2000	**Universal door gear**	**Weight 4.9kg/10.8lb**
	Zinc plated steel	
Kit comprises of:		
	2 x universal keepers	
	2 x universal cams	
	2 x large outer bearing brackets	
	2 x large outer bearing bracket back plates	
	2 x small outer bearing brackets	
	2 x small outer bearing bracket back plates	
	1 x forged handle	
	1 x lever mount	
	1 x rivet	
	1 x retainer plate	
	1 x swivel catch	
	1 x bush	
0977/002	**Galvanised steel tubing - Ø27mm**	
	2.6m (8'6") long, 3mm wall thickness	

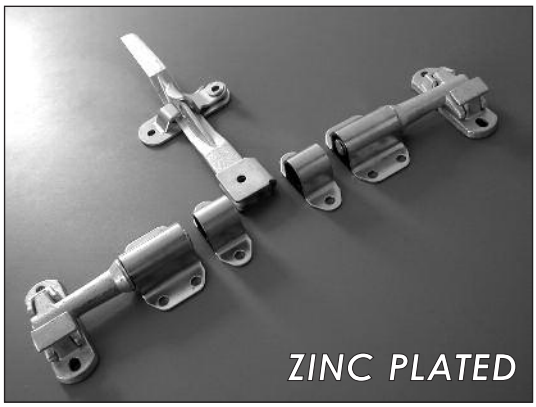

Universal Door Gear suitable for Ø27mm Tube

UNIVERSAL, BOLT-ON DOOR GEAR - BUSHED		
	For Ø27mm tubing (see below)	
2000/2000MN	**Universal door gear**	**Weight 4.6kg/10.1lb**
	Zinc plated steel	
Kit comprises of:		
	2 x universal keepers	
	2 x universal cams	
	2 x large outer bearing brackets	
	2 x large nylon bushes	
	2 x small outer bearing brackets	
	2 x small nylon bushes	
	1 x forged handle	
	1 x lever mount	
	1 x rivet	
	1 x retainer plate	
	1 x swivel catch	
	1 x bush	
0977/002	**Galvanised steel tubing - Ø27mm**	
	2.6m (8'6") long, 3mm wall thickness	

UNIVERSAL, BOLT-ON DOOR GEAR - BUSHED - FORGED HANDLE		
	For Ø27mm tubing (see below)	
1999/2010N10	**Universal door gear**	**Weight 3.8kg/8.4lb**
	304 Stainless steel	
Kit comprises of:		
	2 x universal narrow base keepers	
	2 x universal cams	
	2 x large outer bearing brackets	
	2 x small outer bearing brackets	
	6 x grey nylon bushes	
	2 x anti rack rings	
	1 x forged handle	
	1 x lever mount	
	1 x rivet	
	1 x retainer plate	
	1 x swivel catch	
	1 x bush	
1999/019	**304 Stainless steel tubing - Ø27mm**	
	2.6m (8'6") long, 2.5mm wall thickness	

Universal Door Gear suitable for Ø27mm Tube

UNIVERSAL, BOLT-ON DOOR GEAR - BUSHED - D GRIP HANDLE		
	For Ø27mm tubing (see below)	
1999/2010N20	**Universal door gear**	**Weight 3.8kg/8.4lb**
	304 Stainless steel	
Kit comprises of:		
	2 x universal narrow base keepers	
	2 x universal cams	
	2 x large outer bearing brackets	
	2 x small outer bearing brackets	
	6 x grey nylon bushes	
	2 x anti rack rings	
	1 x D grip handle	
	1 x lever mount	
	1 x rivet	
	1 x retainer plate	
	1 x swivel catch	
	1 x bush	
1999/019	**304 Stainless steel tubing - Ø27mm**	
	2.6m (8'6") long, 2.5mm wall thickness	

Universal Door Gear suitable for Ø27mm Tube

UNIVERSAL, WELD-ON DOOR GEAR - BUSHED		
	For Ø34mm tubing (see below)	
1999/2588	**Universal door gear**	**Weight 4.4kg/9.7lb**
	Self colour steel	
Kit comprises of:		
	2 x universal keepers	
	2 x universal cams	
	2 x large outer bearing brackets	
	2 x large black nylon bushes	
	2 x small outer bearing brackets	
	2 x small black nylon bushes	
	1 x forged handle	
	1 x lever mount	
	1 x rivet	
	1 x handle retainer assembly	
1999/02500	**Self colour steel tubing - Ø34mm**	
	2.5m long, 3mm wall thickness	

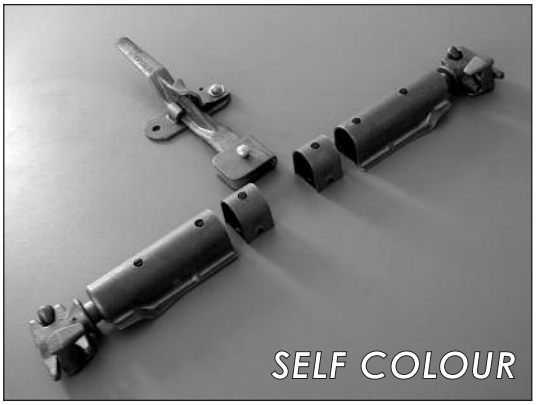

Universal Door Gear suitable for Ø34mm Tube

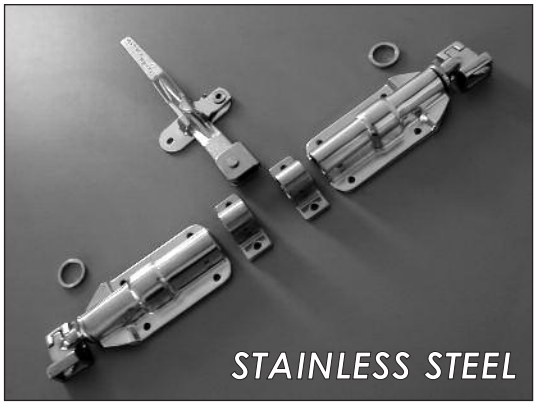

Universal Door Gear suitable for Ø34mm Tube

UNIVERSAL, BOLT-ON DOOR GEAR - UN-BUSHED		
	For Ø34mm tubing (see below)	
1999/3500	**Universal door gear**	**Weight 7.2kg/15.9lb**
	304 Stainless steel	
Kit comprises of:		
	2 x universal keepers	
	2 x universal cams	
	2 x large outer bearing brackets	
	2 x large outer bearing brackets back plates	
	2 x small outer bearing brackets	
	2 x small outer bearing brackets back plates	
	2 x anti rack rings	
	1 x forged handle	
	1 x lever mount	
	1 x rivet	
	1 x retainer plate	
	1 x swivel catch	
	1 x bush	
1999/3000	**304 Stainless steel tubing - Ø34mm**	
	3m long, 3mm wall thickness	

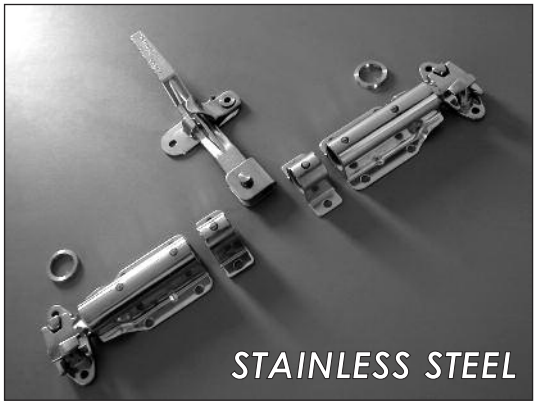

Universal Door Gear suitable for Ø34mm Tube

UNIVERSAL, BOLT-ON DOOR GEAR - BUSHED		
	For Ø34mm tubing (see below)	
1999/25660	**Universal door gear**	**Weight 4.5kg/9.9lb**
	304 Stainless steel	
Kit comprises of:		
	2 x universal keepers	
	2 x universal cams	
	2 x large outer bearing brackets	
	2 x large grey nylon bushes	
	2 x small outer bearing brackets	
	2 x small grey nylon bushes	
	2 x anti rack rings	
	1 x forged handle	
	1 x lever mount	
	1 x rivet	
	1 x retainer plate	
	1 x swivel catch	
	1 x bush	
1999/3000	**304 Stainless steel tubing - Ø34mm**	
	3m long, 3mm wall thickness	

UNIVERSAL, RECESSED DOOR GEAR - 'HI-PUSH' HANDLE	
	304 Stainless steel
	For Ø16mm tubing (see below)
9810/0035	**Recessed door gear kit**
Kit comprises of:	*1 x 'Hi-Push' recessed handle (35mm)*
	2 x universal keepers (horizontal fixing)
	2 x universal cams (horizontal fixing)
9810/0029	**Recessed door gear kit**
Kit comprises of:	*1 x 'Hi-Push' recessed handle (29mm)*
	2 x universal keepers (horizontal fixing)
	2 x universal cams (horizontal fixing)
9810/0255	**Recessed door gear kit**
Kit comprises of:	*1 x 'Hi-Push' recessed handle (25.5mm)*
	2 x universal keepers (horizontal fixing)
	2 x universal cams (horizontal fixing)
9810/0245	**304 Stainless steel tubing - Ø16mm**
	2.5m long, 2mm wall thickness

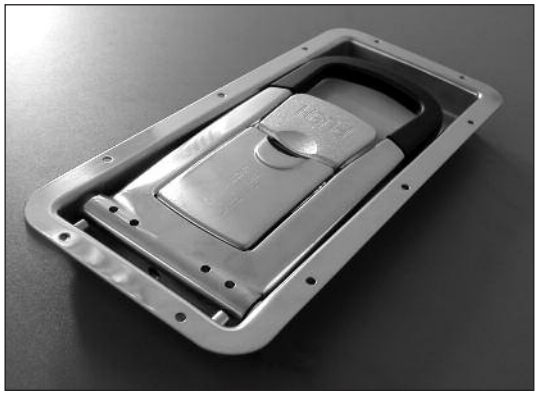

Insert shows universal cam & keeper suitable for horizontal fixing.

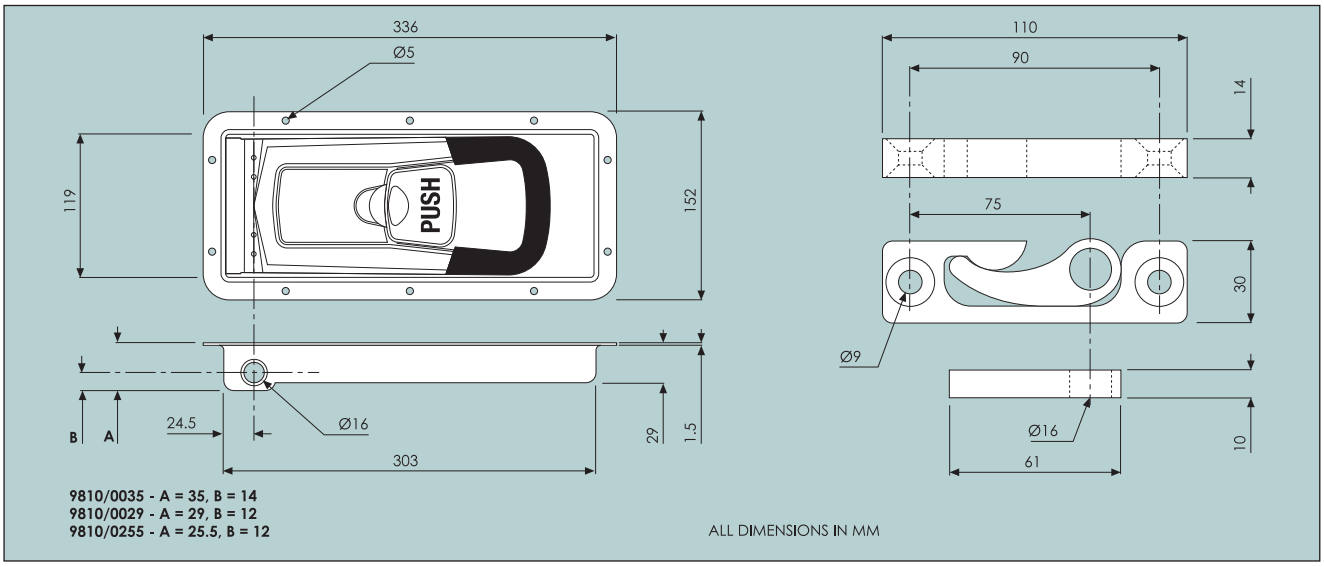

9810/0035 - A = 35, B = 14
9810/0029 - A = 29, B = 12
9810/0255 - A = 25.5, B = 12

ALL DIMENSIONS IN MM

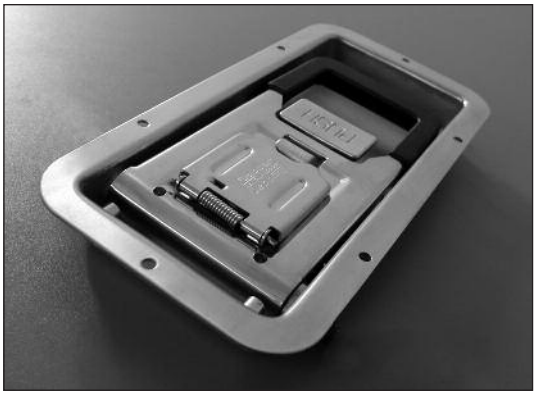

UNIVERSAL, RECESSED DOOR GEAR - 'MINI-PUSH' HANDLE	
	304 Stainless steel
	For Ø16mm tubing (see below)
9810/2900	**Recessed door gear kit**
Kit comprises of:	*1 x 'Mini-Push' recessed handle (29mm)*
	2 x universal keepers (horizontal fixing)
	2 x universal cams (horizontal fixing)
9810/2550	**Recessed door gear kit**
Kit comprises of:	*1 x 'Mini-Push' recessed handle (25.5mm)*
	2 x universal keepers (horizontal fixing)
	2 x universal cams (horizontal fixing)
9810/0245	**304 Stainless steel tubing - Ø16mm**
	2.5m long, 2mm wall thickness

Insert shows universal cam & keeper suitable for horizontal fixing.

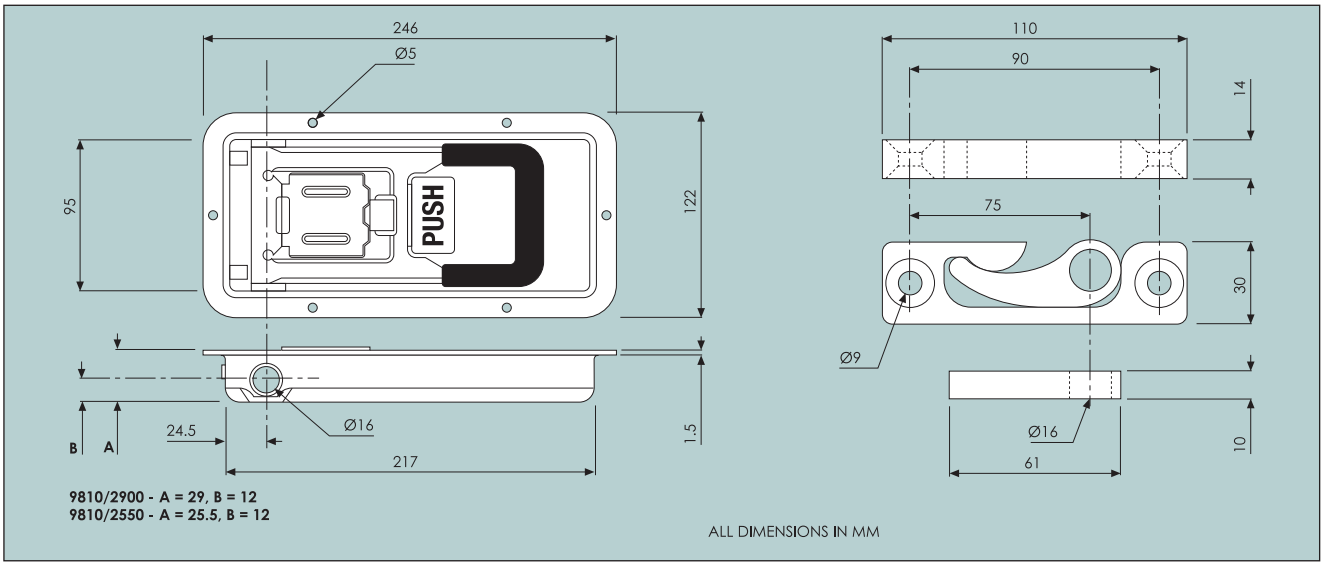

Door Gear

UNIVERSAL, PLANT-ON DOOR GEAR - 'PUSH' HANDLE	
	304 Stainless steel
	For Ø16mm tubing (see below)
9810/0242	**Plant-on door gear kit**
Kit comprises of:	*1 x 'Push' plant-on handle*
	1 x Universal, bolt-on, door gear assembly
Assembly contents:	*2 x Universal cams*
	2 x Universal keepers
	2 x Large bearer brackets
	1 x Small bearer brackets
	5 x Nylon bracket plates
	2 x Anti-rrack rings
9810/0245	**304 Stainless steel tubing - Ø16mm**
	2.5m long, 2mm wall thickness

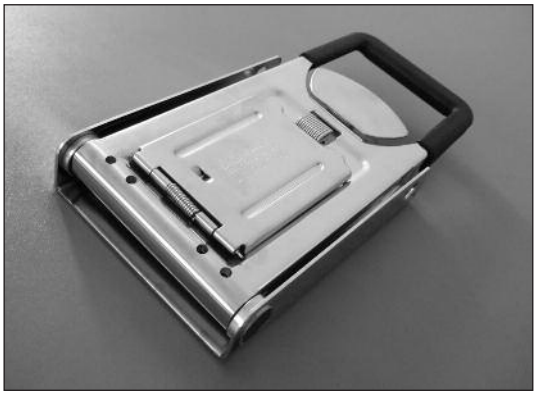

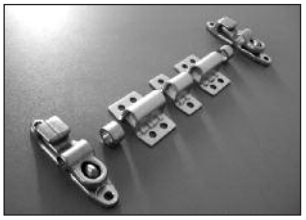

Insert shows universal door gear kit, suitable for Ø16mm tube.

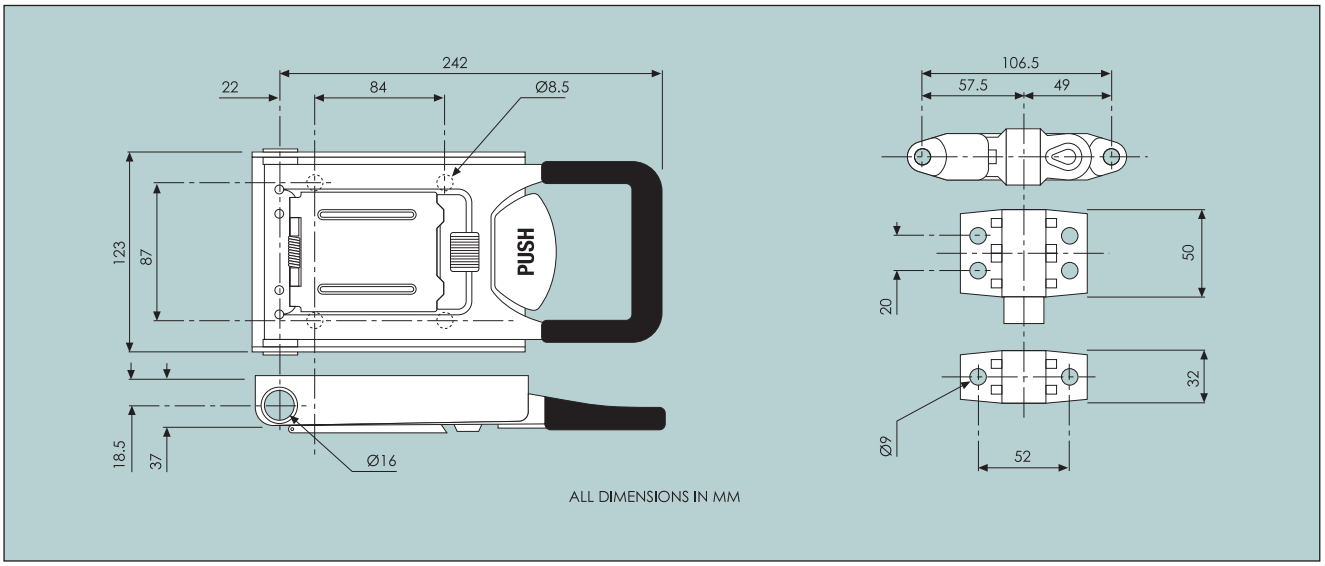

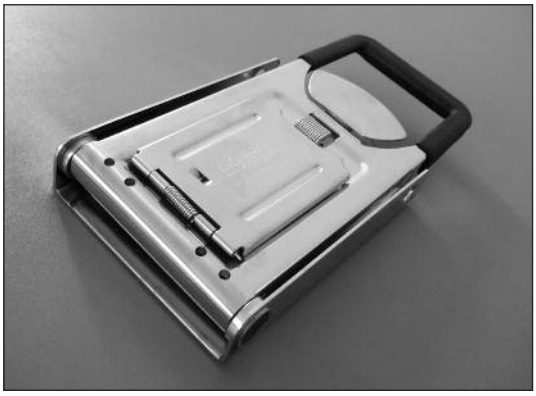

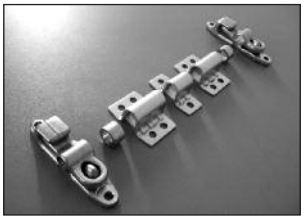

Insert shows universal door gear kit, suitable for Ø16mm tube.

UNIVERSAL, PLANT-ON DOOR GEAR - 'PUSH' HANDLE	
	304 Stainless steel
	For Ø16mm tubing (see below)
9810/1633	**Plant-on door gear kit**
Kit comprises of:	*1 x 'Mini - Push' plant-on handle*
	1 x Universal, bolt-on, door gear assembly
Assembly contents:	*2 x Universal cams*
	2 x Universal keepers
	2 x Large bearer brackets
	1 x Small bearer brackets
	5 x Nylon bracket plates
	2 x Anti-rrack rings
9810/0245	**304 Stainless steel tubing - Ø16mm**
	2.5m long, 2mm wall thickness

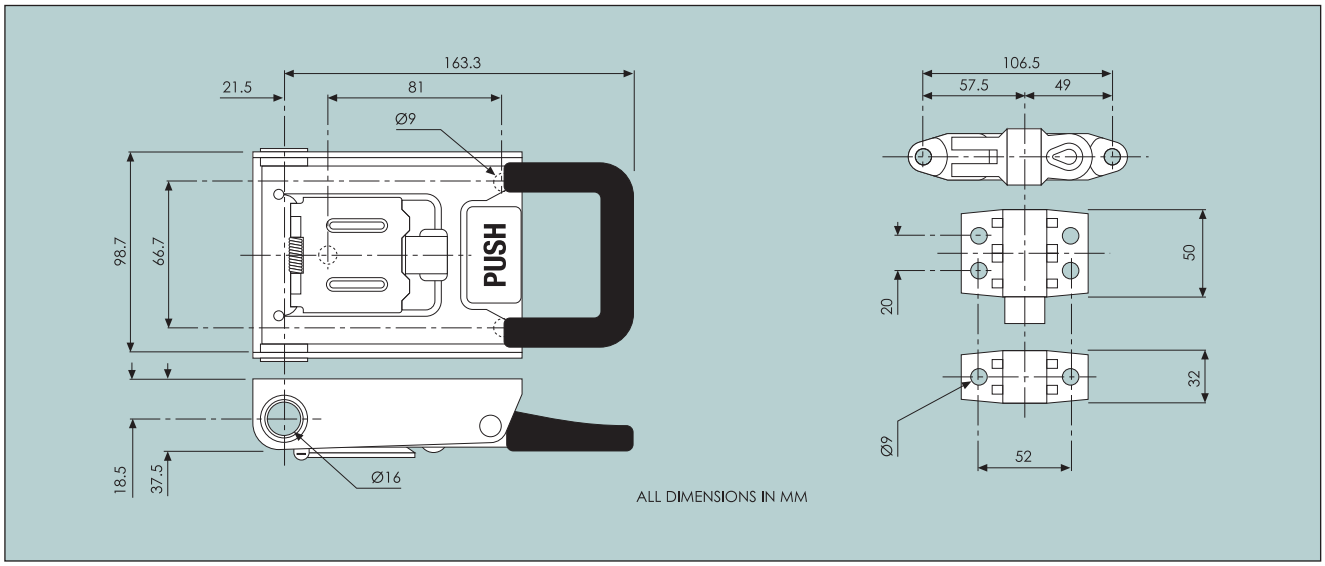

Door Gear

UNIVERSAL, PLANT-ON DOOR GEAR - 'PUSH' HANDLE	
	304 Stainless steel
	For Ø22mm tubing (see below)
9810/0248	**Plant-on door gear kit**
Kit comprises of:	*1 x 'Hi - Push' plant-on handle*
	1 x Universal, bolt-on, door gear assembly
Assembly contents:	*2 x Universal cams*
	2 x Universal keepers
	2 x Large cranked bearer brackets
	2 x Large cranked back plates
	1 x Small bearer brackets
	1 x Small back plate
1999/018	**304 Stainless steel tubing - Ø22mm**
	3m long, 1.5mm wall thickness

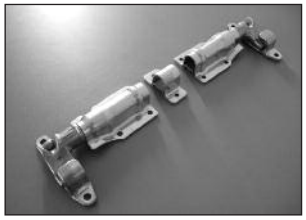

Insert shows universal door gear kit, suitable for Ø22mm tube.

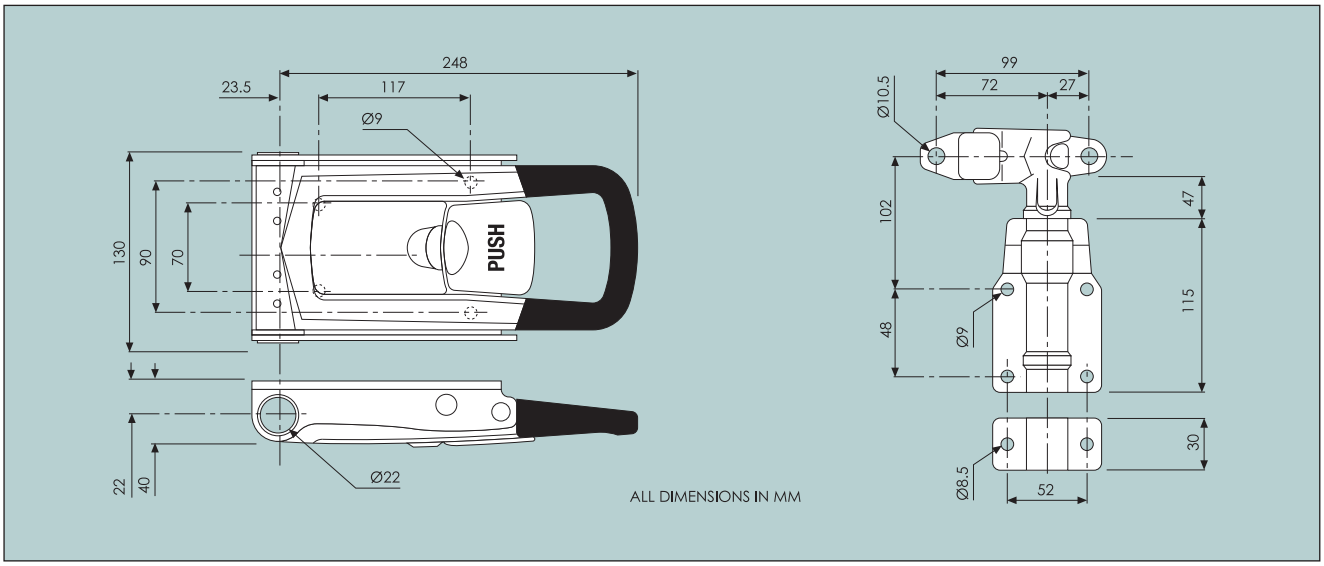

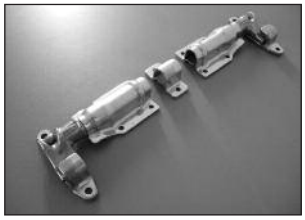

Insert shows universal door gear kit, suitable for Ø27mm tube.

UNIVERSAL, PLANT-ON DOOR GEAR - 'PUSH' HANDLE	
	304 Stainless steel
	For Ø27mm tubing (see below)
9810/0278	**Plant-on door gear kit**
Kit comprises of:	*1 x 'Hi - Push' plant-on handle*
	1 x Universal, bolt-on, door gear assembly
Assembly contents:	*2 x Universal cams*
	2 x Universal keepers
	2 x Large cranked bearer brackets
	2 x Large cranked back plates
	1 x Small bearer brackets
	1 x Small back plate
1999/019	**304 Stainless steel tubing - Ø27mm**
	2.6m long, 2.5mm wall thickness

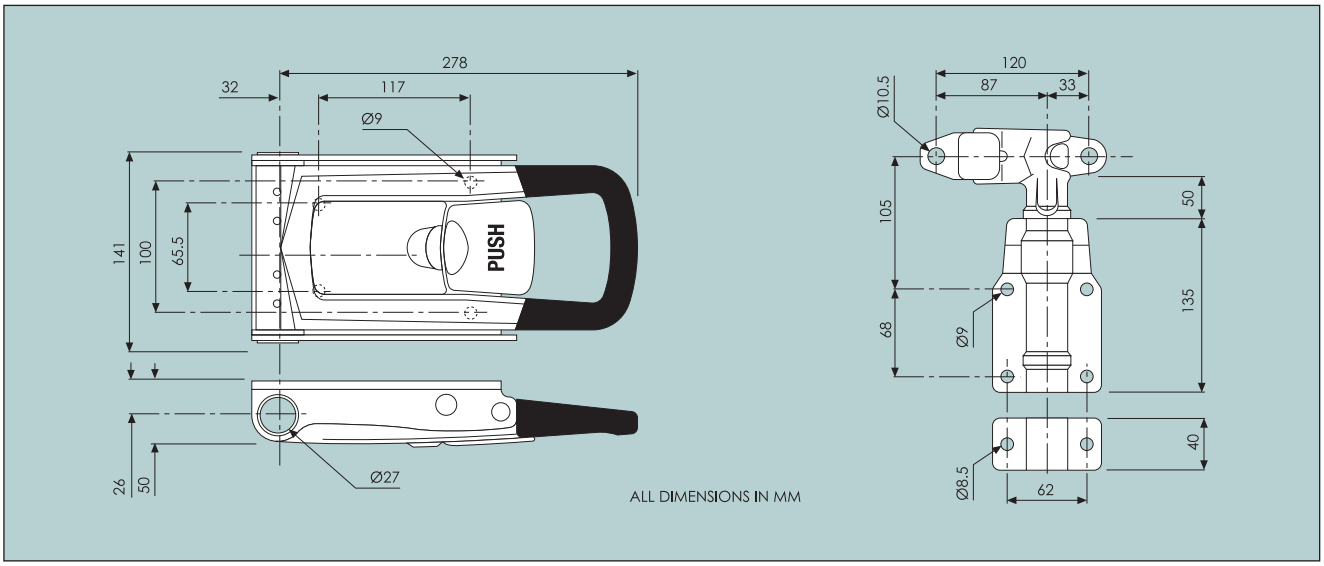

CENTAUR WINDOW HANDLE

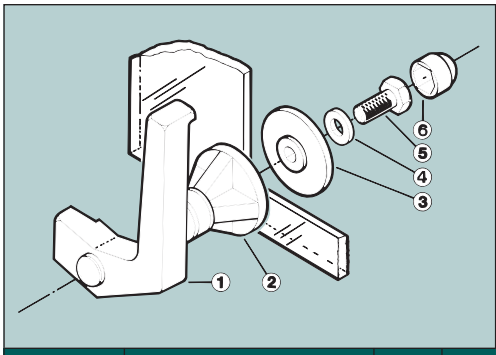

Complete assembly illustrated.
Ideally suited for single hole fixing direct to glass.

PART NO.	DESCRIPTION	QTY	MATERIAL	ITEM NO.
1356/001	Handle	1	Plastic	1
1356/058	M8 tapped cone housing	1	Plastic	2
1350/056	Cone washer	1	Plastic	3
1350/053	Ø8 washer	1	Steel, chem. black	4
1350/055	Screw, M8 x 20*	1	Steel, chem. black	5
1350/054	Cap	1	Plastic	6
1356/002	Complete assembly			1-6

*M8 x 20 for 4 - 6mm glass thickness. Ø15mm (0.6") hole in glass required.

CENTAUR STAND-OFF HINGE

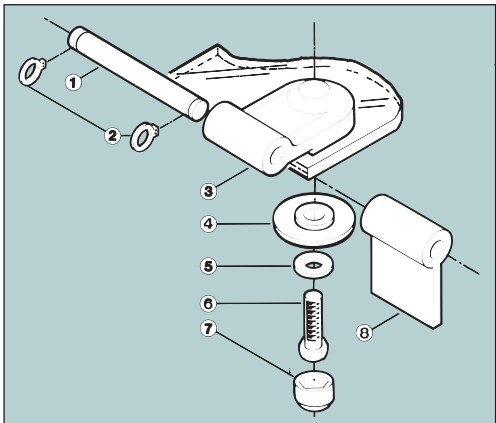

Complete assembly illustrated.
A combination hinge assembly with one section plastic to allow single hole fixing on glass and the other is a self-colour, steel, weld-on, hinge support.

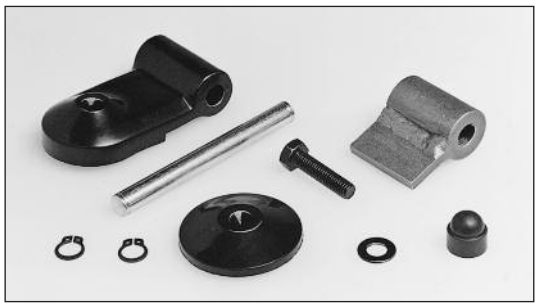

PART NO.	DESCRIPTION	QTY	MATERIAL	ITEM NO.
1350/068	Ø8 x 76 pin	1	Steel, zinc plated	1
1350/069	Circlip	2	Steel, black	2
1350/062	Hinge	1	Plastic	3
1350/064	Cone washer	1	Plastic	4
1350/067	Ø6 washer	1	Steel, chem. black	5
1350/066	Screw M6 x 25*	1	Steel, chem. black	6
1350/065	Cap	1	Plastic	7
1350/070	Hinge, weld-on	1	Steel, self-colour	8
1350/004	Complete assembly			1-8

*M6 x 25 for 4 - 6mm glass thickness. Ø15mm (0.6") hole in glass required.

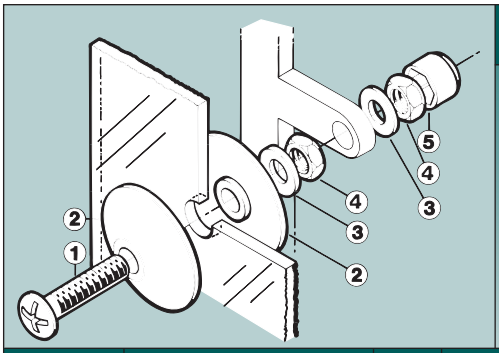

CENTAUR GLAZING CLAMP

Complete assembly illustrated.
Two plastic washers give a clamping action on this versatile, single hole glazing clamp.

PART NO.	DESCRIPTION	QTY	MATERIAL	ITEM NO.
1356/057	Screw, M6 x 40*	1	Steel, chem. black	1
1350/064	Cone washer	2	Plastic	2
1350/067	Ø6 washer	2	Steel, chem. black	3
1350/063	M6 nut	2	Steel, chem. black	4
1350/065	Cap	1	Plastic	5
1356/003	Complete assembly			1-5

*M6 x 40 for 4 - 6mm glass thickness. Ø15mm (0.6") hole in glass required.

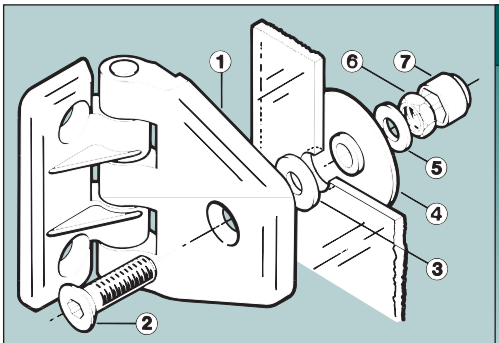

CENTAUR WINDOW HINGE

With optional fixing pack.
Complete assembly illustrated.
For dimensions of hinge (1), see section C, part no. 1350/002.
Ideally suited for single hole fixing direct to glass.

PART NO.	DESCRIPTION	QTY	MATERIAL	ITEM NO.
1350/002	Hinge	1	Plastic	1
1350/051	Screw, M8 x 35*	1	Black steel	2
1350/057	Ø8 washer	1	Rubber	3
1350/056	Cone washer	1	Plastic	4
1350/053	Ø8 washer	1	Steel, chem. black	5
1350/052	M8 nut	1	Steel, chem. black	6
1350/054	Cap	1	Plastic	7
1350/003	Complete fixing pack (no hinge)			2-7

*M8 x 35 for 4 - 6mm glass thickness. Ø15mm (0.6") hole in glass required.

Window Fittings

HINGED WINDOW STOP

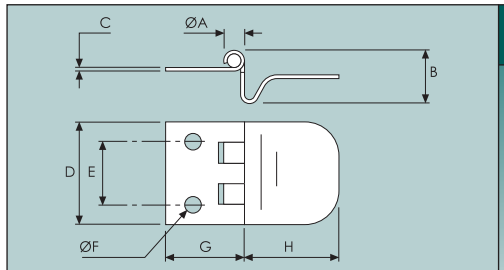

To suit sliding window.
Chrome plate on brass.

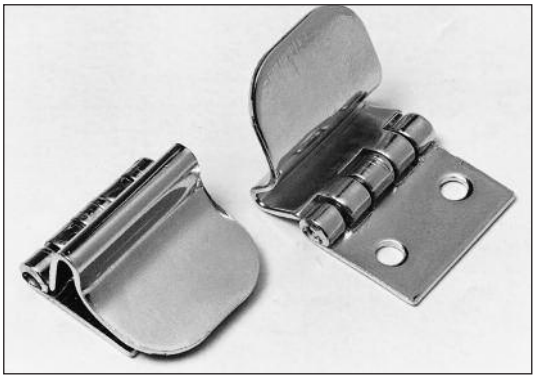

	A	B	C	D	E	F	G	H
2071/001					**Weight 10g/0.47oz**			
METRIC (mm)	*5*	*13*	*1*	*23*	*14.5*	*3.5*	*18*	*23*
IMPERIAL (ins)	*0.20*	*0.51*	*0.04*	*0.91*	*0.57*	*0.14*	*0.71*	*0.91*

OVERCENTRE WINDOW FASTENER

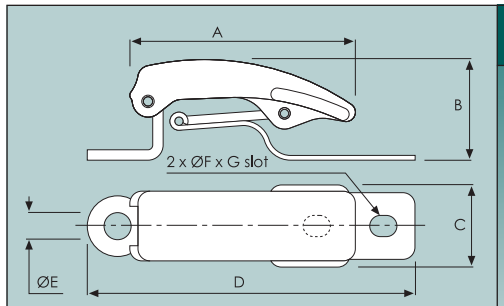

Fastener with black, polypropylene body with black painted, mild steel legs.
Assembly consists of 2 fasteners, 4 painted steel brackets & 6 window clamp sets.
Fixing via 3 x Ø12mm holes.
Suitable for glass up to 4mm thick.

	A	B	C	D	E	F	G	H
1351/200					**Weight 290g/10.2oz**			
METRIC (mm)	*74.0*	*35.0*	*26.5*	*106*	*9.00*	*6.50*	*9.00*	
IMPERIAL (ins)	*2.91*	*1.38*	*1.04*	*4.17*	*0.35*	*0.26*	*0.35*	

SLIDING WINDOW LATCH

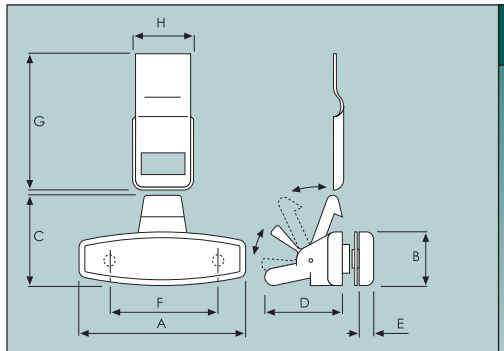

Assembly consists of black polypropylene latch & face plate, rubber gasket, 2 screws & a painted steel catch plate.
Suitable for glass up to 4mm thick.
Mounted via 2 x Ø12mm holes.

	A	B	C	D	E	F	G	H
2071/100					**Weight 40g/1.4oz**			
METRIC (mm)	*58.0*	*22.0*	*35.0*	*27.0*	*4.50*	*40.0*	*48.0*	*22.0*
IMPERIAL (ins)	*2.28*	*0.87*	*1.38*	*1.06*	*0.18*	*1.58*	*1.89*	*0.87*

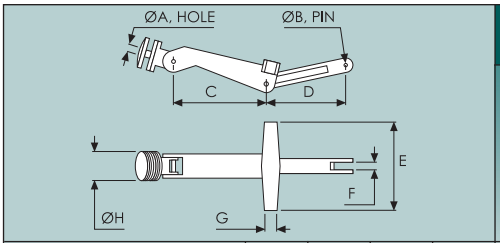

SIDE WINDOW HANDLE

Black plastic moulding, complete with glazing clamp.

	A	B	C	D	E	F	G	H
1351/001 **Single stage opening** **Weight 120g/4.2oz**								
1351/002 **Multi stage opening**								
METRIC (mm)	*13*	*5*	*112*	*94*	*100*	*5*	*12*	*35*
IMPERIAL (ins)	*0.51*	*0.20*	*4.41*	*3.70*	*3.94*	*0.20*	*0.47*	*1.38*

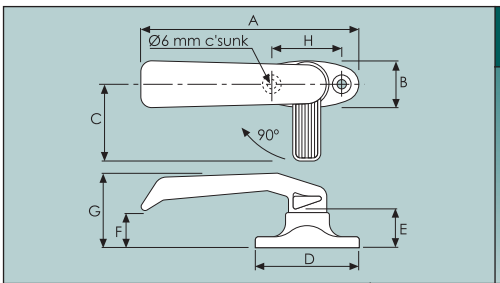

TWIST-ACTION LEVER HANDLE

Black plastic with a textured grain finish.

	A	B	C	D	E	F	G	H
1357/001 **Left hand (shown)** **Weight 60g/2.1oz**								
1357/002 **Right hand**								
METRIC (mm)	*140*	*30*	*50*	*67*	*25*	*29*	*49*	*45*
IMPERIAL (ins)	*5.51*	*1.18*	*1.97*	*2.64*	*0.98*	*1.14*	*1.93*	*1.77*

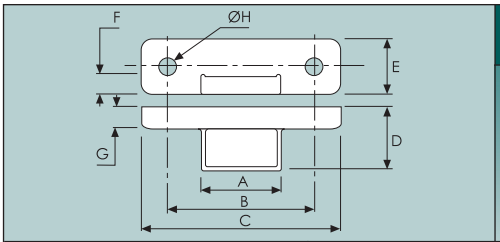

STRIKER

For use with 1357/001 & 2 (see above).
Black plastic with a textured grain finish.

	A	B	C	D	E	F	G	H
1357/010 **Weight 30g/1.1oz**								
METRIC (mm)	*36*	*66*	*90*	*28*	*25*	*9*	*11*	*8*
IMPERIAL (ins)	*1.42*	*2.60*	*3.54*	*1.10*	*0.98*	*0.35*	*0.43*	*0.32*

FLAT SPONGE STRIP

Black, closed cell, nitrile/pvc. Self adhesive, single side.

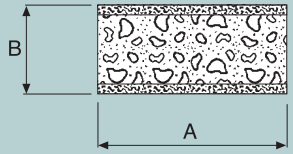

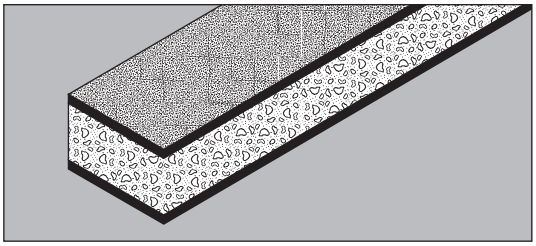

PART NO.	PREVIOUS NO.	WIDTH (A)	DEPTH (B)	LENGTH (ROLL)
3216/0321	*3216/032*	13mm/0.51"	6mm/0.24"	15m/49'
3216/050	*3216/050*	19mm/0.75"	3mm/0.12"	15m/49'
3216/0521	*3216/052*	19mm/0.75"	6mm/0.24"	15m/49'
3216/0701	*3216/070*	25mm/0.98"	3mm/0.12"	15m/49'
3216/0721	*3216/072*	25mm/0.98"	6mm/0.24"	15m/49'
3216/078	***NEW***	25mm/0.98"	25mm/0.98"	4m/13'
3216/0791	*3216/079*	25mm/0.98"	13mm/0.51"	8m/26'
3216/055	***NEW***	19mm/0.75"	13mm/0.51"	8m/26'

This is only part of our popular range, other sizes are available on request. Other options include natural sponge rubber, expanded neoprene, non-adhesive, double sided adhesive, open cell and closed cell. If your requirements are not shown, please contact us with your details.

GLAZING TOOLS

For installing glazing strip and filler strip.
Available in kit form or spares.

3217/001	**COMPLETE WEATHER STRIP TOOL KIT**
Includes:	*1 rubber handle • 3 large eyes • 1 large hook • 1 allen key •*
3240/001	**COMPLETE WEATHER STRIP TOOL KIT**
Includes:	*1 rubber handle • 2 small eyes • 1 large hook • 1 small hook • 2 roller hooks • 1 nylon roller • 1 allen key •*
3304/001	**COMPLETE WEATHER STRIP TOOL KIT**
Includes:	*1 metal handle • 3 large eyes • 3 small eyes • 1 large hook • 1 small hook • 1 stem • 1 allen key •*

For installing glazing and filler strip.
Available as boxed kit or spares.

• SPARES • SPARES • SPARES • SPARES • SPARES • SPARES • SPARES • SPARES • SPARES • SPARES • SPARES •

Rubber handle	*Large eye*	*Small eye*	*Large hook*	*Small hook*	*Allen key*
6371/001	*6372/001*	*6373/001*	*6374/001*	*6375/001*	*6376/001*
Small wire eye	*Nylon roller*	*Roller hooks*	*Grub screw*	*Metal handle*	*Stem*
6377/001	*6378/001*	*6379/001*	*6380/001*	*6381/001*	*6382/001*

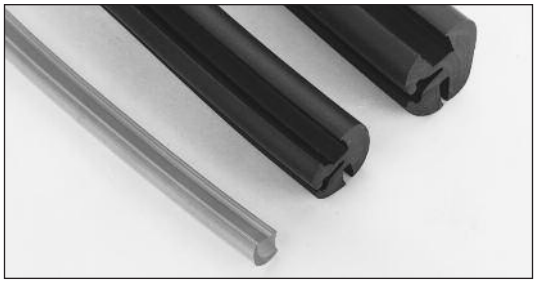

Self-sealing, PVC, extruded profiles.
This is only part of an extensive range, if the profile you require is not shown please contact us with your details.
All drawings shown actual size.

NB: Glass/panel' (or 'WEB') dimension refers to recommended gap BETWEEN glass & panel not actual dimension.

• GLAZING STRIP • GLAZING STRIP • GLAZING STRIP • GLAZING STRIP • GLAZING STRIP • GLAZING STRIP •

3214/001		
Glass	=	6.4mm 0.25"
Panel	=	1.2 -1.6mm 16-18g
Glass/panel	=	8.6mm 0.34"
Min. rad.	=	101.6mm 4"
Length	=	30m 32.8yds
Material	=	PVC

3214/002		
Glass	=	4.8mm 0.1875"
Panel	=	1.2 -1.6mm 16-18g
Glass/panel	=	7.9mm 0.31"
Min. rad.	=	57.2mm 2.25"
Length	=	60m 65.6yds
Material	=	PVC

5048/001		
Glass	=	4.8mm 0.1875"
Panel	=	2.6 -3.2mm 10-12g
Glass/panel	=	7.9mm 0.31"
Min. rad.	=	57.2mm 2.25"
Length	=	60m 65.6yds
Material	=	PVC

5092/001		
Glass	=	6.4mm 0.25"
Panel	=	2.6 -3.2mm 10-12g
Glass/panel	=	8.6mm 0.34"
Min. rad.	=	101.6mm 4"
Length	=	30m 32.8yds
Material	=	PVC

5092/460		
Glass	=	6.4mm 0.25"
Panel	=	6.4mm 0.25"
Glass/panel	=	8.6mm 0.34"
Min. rad.	=	101.6mm 4"
Length	=	30m 32.8yds
Material	=	PVC

• FILLER STRIP • FILLER STRIP • FILLER STRIP • FILLER STRIP • FILLER STRIP • FILLER STRIP • FILLER STRIP •

3215/001
Black rubber 60m (65.6yd) length

3236/001
"Chrome" plastic 30m (32.8yd) length

3319/001
"Chrome" plastic 30m (32.8yd) length

3364/001
"Chrome" plastic 30m (32.8yd) length

Glazing Accessories

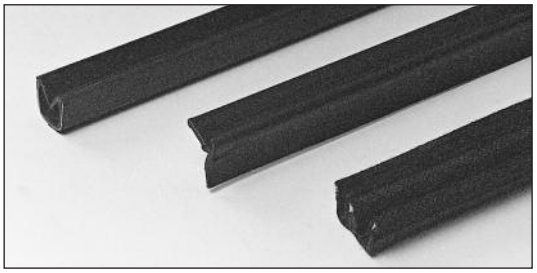

Glass channels and waist seals, both rigid and flexible.
All drawings actual size.

• GLAZING SECTIONS • GLAZING SECTIONS • GLAZING SECTIONS • GLAZING SECTIONS • GLAZING SECTIONS •

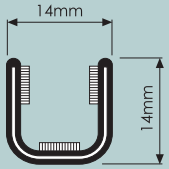

5010/001

Flexible channel, steel core
Felt & moquette lined
25m (27.3yd) coil
Glass = 4.7-6.4mm
0.19-0.25"

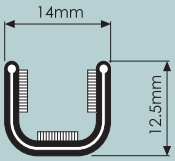

5059/001

Rigid channel, steel core
Felt & moquette lined
2m (2.2yd) length
Glass = 4.7-6.4mm
0.19-0.25"

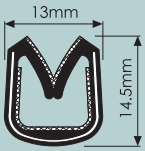

5142/001

Rigid channel, steel core
Flock spray lined
2m (2.2yd) length
Glass = 4-6mm
0.16-0.24"

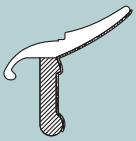

5134/002

Waist seal
Co-extruded PVC
Flock sprayed surface
1m (39") length

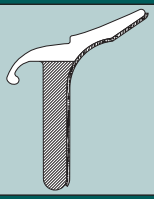

5139/004

Waist seal
Co-extruded PVC
Flock sprayed surface
1m (39") length

5149/001

Rigid waist seal
Flock sprayed lip
1m (39") length

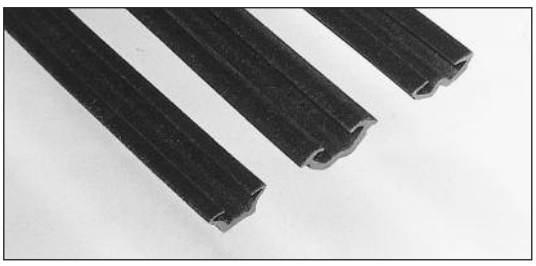

Flexible, extruded profiles electrostatically flocked.
All drawings actual size.

• FLOCK SPRAYED CHANNEL • FLOCK SPRAYED CHANNEL • FLOCK SPRAYED CHANNEL • FLOCK SPRAYED CHANNEL •

5130/001

Fitted width = 13mm (0.5")
15m (16.4yd) coil
European pattern

5178/001

Fitted width = 16mm (0.63")
15m (16.4yd) coil
Japanese pattern

5199/001

Fitted width = 17mm (0.69")
15m (16.4yd) coil
European pattern

Extruded Seals

• EXTRUDED SEALS •

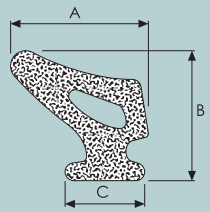

4767/001

'Sponge strip'
50m coil

Material	=	EPDM
Width (A)	=	18 mm
Seal depth (B)	=	17 mm
Base width (C)	=	11.5 mm

• EXTRUDED SEALS •

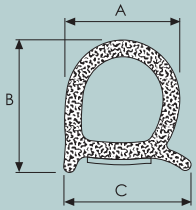

6318/001

'Self adhesive sponge strip'
50m coil

Material	=	EPDM
Width (A)	=	14.3 mm
Seal depth (B)	=	16 mm
Base width (C)	=	15.3 mm

• EXTRUDED SEALS •

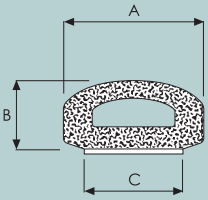

5590/0133

'Self adhesive sponge strip'
50m coil

Material	=	EPDM
Width (A)	=	18 mm
Seal depth (B)	=	9.5 mm
Base width (C)	=	12.5mm

• EXTRUDED SEALS •

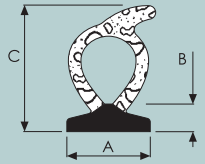

6324/002

'Self adhesive top tube seal'
50m coil

Material	=	EPDM
Base width (A)	=	11mm
base height (B)	=	4mm
Seal height (C)	=	16.8mm

• EXTRUDED SEALS •

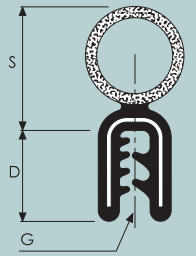

4833/003

'Top tube seal'
25m coil

Material	=	EPDM
Carrier depth (D)	=	12 mm
Seal depth (S)	=	16 mm
Grip range (G)	=	1.0 - 2.0 mm

• EXTRUDED SEALS •

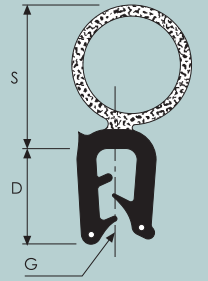

4833/0032

'Top tube seal'
25m coil

Material	=	EPDM
Carrier depth (D)	=	12 mm
Seal depth (S)	=	19 mm
Grip range (G)	=	1.0 - 3.5 mm

• EXTRUDED SEALS •

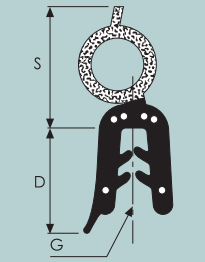

4873/001

'Top tube seal'
50m coil

Material	=	EPDM
Carrier depth (D)	=	12 mm
Seal depth (S)	=	15 mm
Grip range (G)	=	0.5 - 1.5 mm

• EXTRUDED SEALS •

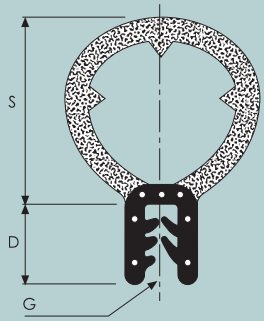

4873/003

'Top tube seal'
25m coil

Material	=	EPDM
Carrier depth (D)	=	11 mm
Seal depth (S)	=	25 mm
Grip range (G)	=	0.5 - 1.5 mm

• EXTRUDED SEALS •

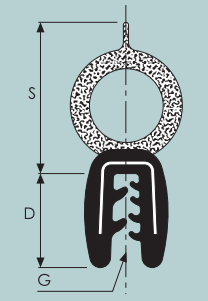

4974/003

'Top tube seal'
50m coil

Material	=	EPDM
Carrier depth (D)	=	12 mm
Seal depth (S)	=	18 mm
Grip range (G)	=	1.5 - 2.5 mm

The above profiles represent only a small part of an extensive range, if the profile you require is not shown please contact us with your requirements.

Extruded Seals

• EXTRUDED SEALS •

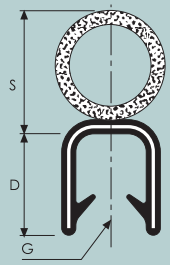

5241/7634

'Top tube seal'
76m coil

Material	=	*PVC/EPDM*
Carrier depth (D)	=	*13.8 mm*
Seal depth (S)	=	*16 mm*
Grip range (G)	=	*9.5 mm*

• EXTRUDED SEALS •

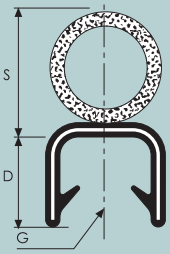

5241/7635

'Top tube seal'
76m coil

Material	=	*PVC/EPDM*
Carrier depth (D)	=	*13 mm*
Seal depth (S)	=	*16 mm*
Grip range (G)	=	*12.5 mm*

• EXTRUDED SEALS •

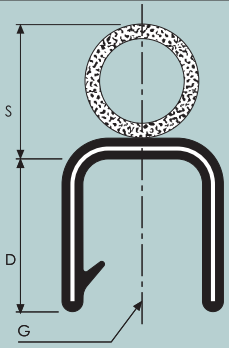

5245/3623

'Jumbo top tube seal'
30m coil

Material	=	*PVC/EPDM*
Carrier depth (D)	=	*21 mm*
Seal depth (S)	=	*17 mm*
Grip range (G)	=	*16 mm*

• EXTRUDED SEALS •

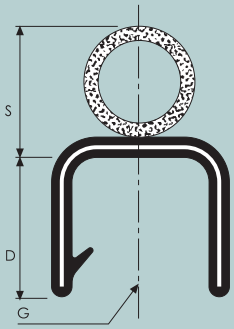

5245/3633

'Jumbo top tube seal'
30m coil

Material	=	*PVC/EPDM*
Carrier depth (D)	=	*19 mm*
Seal depth (S)	=	*17 mm*
Grip range (G)	=	*19 mm*

• EXTRUDED SEALS •

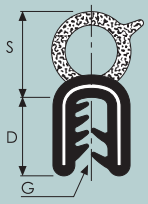

6239/001

'Top tube seal'
50m coil

Material	=	*EPDM*
Carrier depth (D)	=	*9 mm*
Seal depth (S)	=	*10 mm*
Grip range (G)	=	*1.5 - 2.5 mm*

• EXTRUDED SEALS •

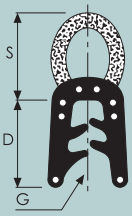

6244/001

'Top tube seal'
50m coil

Material	=	*EPDM*
Carrier depth (D)	=	*11 mm*
Seal depth (S)	=	*11 mm*
Grip range (G)	=	*1.0 - 2.0 mm*

• EXTRUDED SEALS •

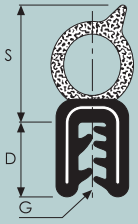

6278/001

'Top tube seal'
50m coil

Material	=	*EPDM*
Carrier depth (D)	=	*9 mm*
Seal depth (S)	=	*15 mm*
Grip range (G)	=	*0.5 - 1.5 mm*

• EXTRUDED SEALS •

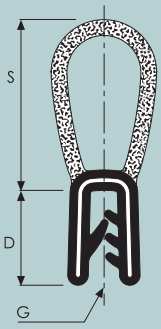

6288/001

'Top tube seal'
50m coil

Material	=	*EPDM*
Carrier depth (D)	=	*13.5 mm*
Seal depth (S)	=	*19 mm*
Grip range (G)	=	*2.0 - 3.0 mm*

• EXTRUDED SEALS •

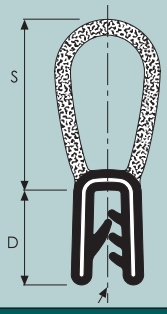

6288/002

'Top tube seal'
50m coil

Material	=	*EPDM*
Carrier depth (D)	=	*13 mm*
Seal depth (S)	=	*17 mm*
Grip range (G)	=	*2.0 - 3.0 mm*

The above profiles represent only a small part of an extensive range, if the profile you require is not shown please contact us with your requirements.

Extruded Seals

• EXTRUDED SEALS•

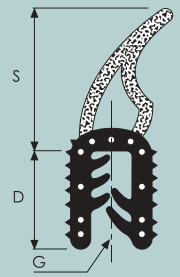

6300/001

'Top leaf seal'
50m coil

Material	=	*EPDM*
Carrier depth (D)	=	*13 mm*
Seal depth (S)	=	*17 mm*
Grip range (G)	=	*2.0 - 3.0 mm*

• EXTRUDED SEALS•

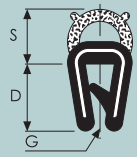

6320/001

'Top tube seal'
50m coil

Material	=	*EPDM*
Carrier depth (D)	=	*9 mm*
Seal depth (S)	=	*6.5 mm*
Grip range (G)	=	*0.8 - 2.5 mm*

• EXTRUDED SEALS•

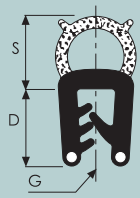

6320/050

'Top tube seal'
50m coil

Material	=	*Rubber*
Carrier depth (D)	=	*11 mm*
Seal depth (S)	=	*10 mm*
Grip range (G)	=	*1.0 - 3.5 mm*

• EXTRUDED SEALS•

6323/001

'Top tube seal'
50m coil

Material	=	*EPDM*
Carrier depth (D)	=	*15 mm*
Seal depth (S)	=	*18 mm*
Grip range (G)	=	*5.0 - 6.0 mm*

• EXTRUDED SEALS•

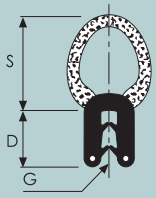

6325/001

'Top tube seal'
50m coil

Material	=	*EPDM*
Carrier depth (D)	=	*7.5 mm*
Seal depth (S)	=	*12.5 mm*
Grip range (G)	=	*0.5 - 1.0 mm*

• EXTRUDED SEALS•

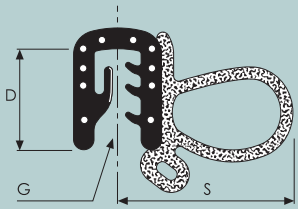

4855/002

'Side tube seal'
50m coil

Material	=	*PVC/EPDM*
Carrier depth (D)	=	*12 mm*
Seal depth (S)	=	*19 mm*
Grip range (G)	=	*2.0 - 3.0 mm*

• EXTRUDED SEALS•

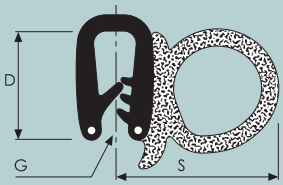

4855/004

'Side tube seal'
50m coil

Material	=	*PVC/EPDM*
Carrier depth (D)	=	*13 mm*
Seal depth (S)	=	*20 mm*
Grip range (G)	=	*0.8 - 3.0 mm*

• EXTRUDED SEALS•

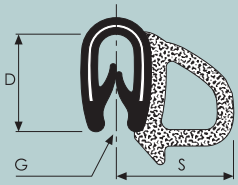

4885/001

'Side tube seal'
50m coil

Material	=	*PVC/EPDM*
Carrier depth (D)	=	*12 mm*
Seal depth (S)	=	*16 mm*
Grip range (G)	=	*0.5 - 1.5 mm*

• EXTRUDED SEALS•

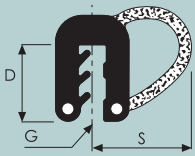

4886/001

'Side tube seal'
50m coil

Material	=	*Rubber*
Carrier depth (D)	=	*10 mm*
Seal depth (S)	=	*14 mm*
Grip range (G)	=	*2.5 - 3.5 mm*

The above profiles represent only a small part of an extensive range, if the profile you require is not shown please contact us with your requirements.

Extruded Seals

• EXTRUDED SEALS •

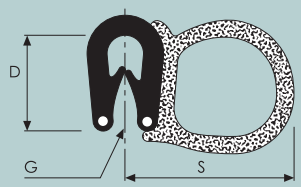

4967/004

'Side tube seal'
50m coil

Material	=	*PVC/EPDM*
Carrier depth (D)	=	*12 mm*
Seal depth (S)	=	*20 mm*
Grip range (G)	=	*1.0 - 2.5 mm*

• EXTRUDED SEALS •

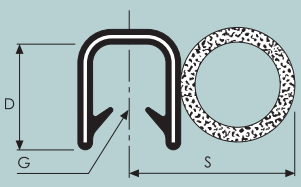

5241/7614

'Side tube seal'
76m coil

Material	=	*PVC/EPDM*
Carrier depth (D)	=	*13.8 mm*
Seal depth (S)	=	*22 mm*
Grip range (G)	=	*9.5 mm*

• EXTRUDED SEALS •

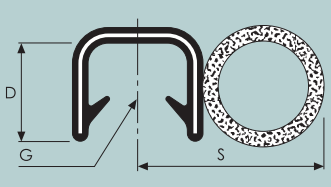

5241/7615

'Side tube seal'
76m coil

Material	=	*PVC/EPDM*
Carrier depth (D)	=	*13 mm*
Seal depth (S)	=	*20 mm*
Grip range (G)	=	*12.5 mm*

• EXTRUDED SEALS •

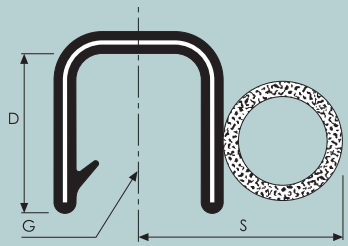

5245/3621

'Jumbo side tube seal'
30m coil

Material	=	*PVC/EPDM*
Carrier depth (D)	=	*21 mm*
Seal depth (S)	=	*25 mm*
Grip range (G)	=	*16 mm*

• EXTRUDED SEALS •

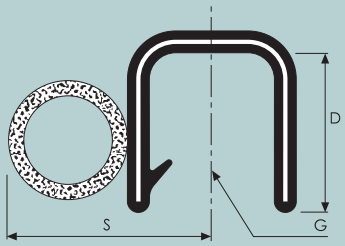

5245/3625

'Jumbo top tube seal'
30m coil

Material	=	*PVC/EPDM*
Carrier depth (D)	=	*21 mm*
Seal depth (S)	=	*25 mm*
Grip range (G)	=	*16 mm*

• EXTRUDED SEALS •

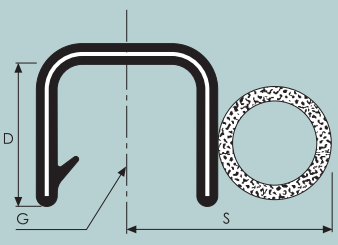

5245/3631

'Jumbo top tube seal'
30m coil

Material	=	*PVC/EPDM*
Carrier depth (D)	=	*19 mm*
Seal depth (S)	=	*28 mm*
Grip range (G)	=	*19 mm*

• EXTRUDED SEALS •

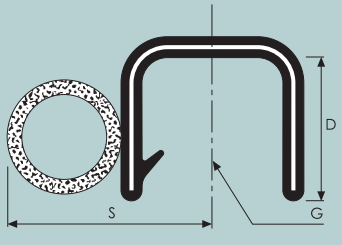

5245/3635

'Jumbo side tube seal'
30m coil

Material	=	*PVC/EPDM*
Carrier depth (D)	=	*19 mm*
Seal depth (S)	=	*28 mm*
Grip range (G)	=	*19 mm*

• EXTRUDED SEALS •

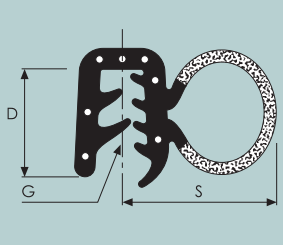

6241/001

'Side tube seal'
50m coil

Material	=	*EPDM*
Carrier depth (D)	=	*13 mm*
Seal depth (S)	=	*19 mm*
Grip range (G)	=	*2.0 - 3.0 mm*

• EXTRUDED SEALS •

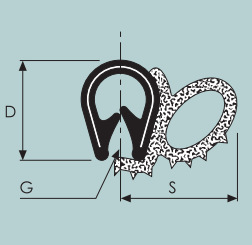

6272/001

'Side tube seal'
25m coil

Material	=	*PVC/EPDM*
Carrier depth (D)	=	*10 mm*
Seal depth (S)	=	*14 mm*
Grip range (G)	=	*2.0 - 3.0 mm*

The above profiles represent only a small part of an extensive range, if the profile you require is not shown please contact us with your requirements.

Extruded Seals

• EXTRUDED SEALS •

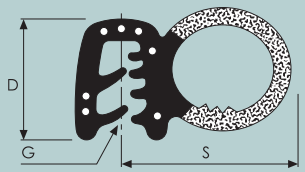

6279/001

'Side tube seal'
50m coil

Material	=	EPDM
Carrier depth (D)	=	12 mm
Seal depth (S)	=	20 mm
Grip range (G)	=	1.5 - 2.5 mm

• EXTRUDED SEALS •

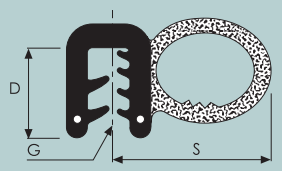

6279/902

'Side tube seal'
50m coil

Material	=	Neoprene
Carrier depth (D)	=	12 mm
Seal depth (S)	=	20 mm
Grip range (G)	=	1.5 - 2.5 mm

• EXTRUDED SEALS •

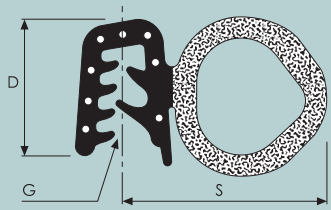

6302/001

'Side tube seal'
50m coil

Material	=	EPDM
Carrier depth (D)	=	13 mm
Seal depth (S)	=	24 mm
Grip range (G)	=	2.0 - 3.0 mm

• EXTRUDED SEALS •

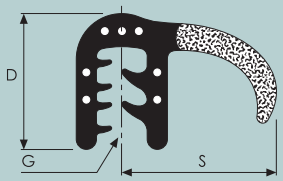

6305/001

'Side leaf seal'
50m coil

Material	=	EPDM
Carrier depth (D)	=	12 mm
Seal depth (S)	=	18 mm
Grip range (G)	=	2.0 - 3.0 mm

• EXTRUDED SEALS •

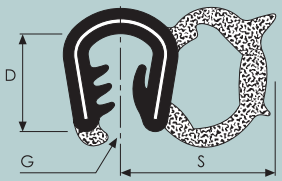

6316/001

'Side tube seal'
50m coil

Material	=	EPDM
Carrier depth (D)	=	14 mm
Seal depth (S)	=	21 mm
Grip range (G)	=	3.5 - 5.0 mm

• EXTRUDED SEALS •

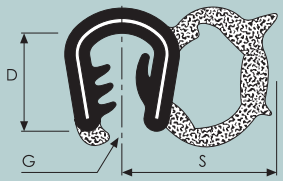

6317/001

'Side tube seal'
50m coil

Material	=	EPDM
Carrier depth (D)	=	15 mm
Seal depth (S)	=	18 mm
Grip range (G)	=	4.0 - 6.0 mm

• EXTRUDED SEALS •

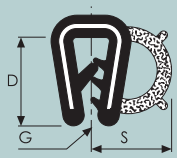

6319/001

'Side tube seal'
50m coil

Material	=	EPDM
Carrier depth (D)	=	10 mm
Seal depth (S)	=	12 mm
Grip range (G)	=	1.0 - 3.0 mm

• EXTRUDED SEALS •

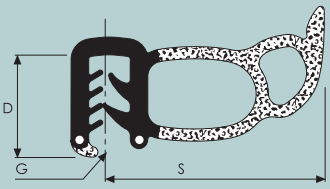

6326/001

'Double side tube seal'
25m coil

Material	=	EPDM
Carrier depth (D)	=	13.5 mm
Seal depth (S)	=	29 mm
Grip range (G)	=	1.0 - 3.0 mm

• EXTRUDED SEALS •

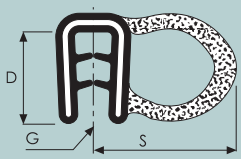

6328/001

'Side tube seal'
25m coil

Material	=	Neoprene
Carrier depth (D)	=	12 mm
Seal depth (S)	=	18.7 mm
Grip range (G)	=	1.5 - 2.5 mm

The above profiles represent only a small part of an extensive range, if the profile you require is not shown please contact us with your requirements.

Extruded Seals

• EXTRUDED SEALS •

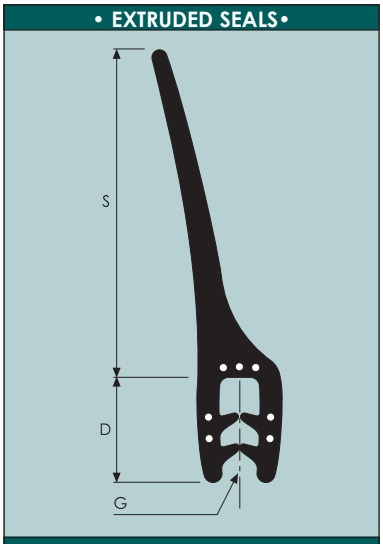

4845/001

'Top leaf seal'
25m coil

Material	=	*EPDM*
Carrier depth (D)	=	*12 mm*
Seal depth (S)	=	*41 mm*
Grip range (G)	=	*1.5 - 3.5 mm*

• EXTRUDED SEALS •

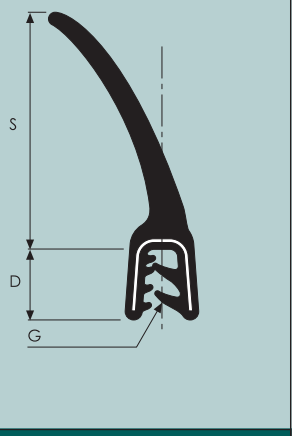

4844/001

'Top leaf seal'
50m coil

Material	=	*EPDM*
Carrier depth (D)	=	*9 mm*
Seal depth (S)	=	*27 mm*
Grip range (G)	=	*1.5 - 2.5 mm*

• EXTRUDED SEALS •

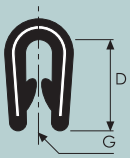

4896/002

Black PVC edge trim
50m coil

Depth (D)	=	*12 mm*
Grip range (G)	=	*0.7 - 2.5 mm*

• EXTRUDED SEALS •

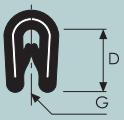

4901/001

Black PVC edge trim
50m coil

Depth (D)	=	*8 mm*
Grip range (G)	=	*0.5 - 1.5 mm*

• EXTRUDED SEALS •

4922/001

Black PVC edge trim
50m coil

Depth (D)	=	*10.7 mm*
Grip range (G)	=	*1.0 - 3.0 mm*

• EXTRUDED SEALS •

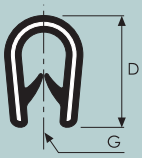

4942/001

Black PVC edge trim
50m coil

Depth (D)	=	*14.8 mm*
Grip range (G)	=	*4.1 mm*

• EXTRUDED SEALS •

4945/001

Black PVC edge trim
50m coil

Depth (D)	=	*12.5 mm*
Grip range (G)	=	*1.0 - 3.0 mm*

• EXTRUDED SEALS •

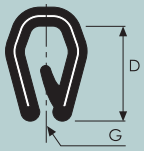

4946/002

Black PVC edge trim
50m coil

Depth (D)	=	*13 mm*
Grip range (G)	=	*2.5 - 4.0 mm*

Extruded Seals

• EXTRUDED SEALS •

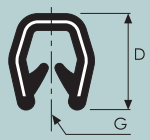

4949/002
Black PVC edge trim
50m coil
Depth (D) = 12 mm
Grip range (G) = 2.0 - 4.0 mm

• EXTRUDED SEALS •

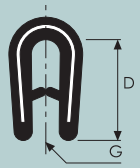

4965/001
Black PVC edge trim
50m coil
Depth (D) = 13.3 mm
Grip range (G) = 1.0 - 3.0 mm

• EXTRUDED SEALS •

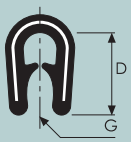

4969/001
Black PVC edge trim
50m coil
Depth (D) = 12 mm
Grip range (G) = 1.5 - 3.0 mm

• EXTRUDED SEALS •

4977/002
Black PVC edge trim
50m coil
Depth (D) = 8 mm
Grip range (G) = 1.0 - 2.0 mm

• EXTRUDED SEALS •

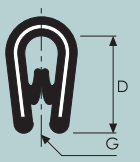

4945/005
Grey PVC edge trim
50m coil
Depth (D) = 12.5 mm
Grip range (G) = 1.0 - 3.0 mm

• EXTRUDED SEALS •

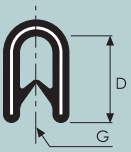

5240/0508
Black PVC edge trim
76m coil
Depth (D) = 11.5 mm
Grip range (G) = 4.7 mm

• EXTRUDED SEALS •

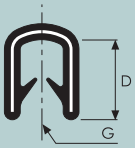

5240/0509
Black PVC edge trim
76m coil
Depth (D) = 10.5 mm
Grip range (G) = 6.3 mm

• EXTRUDED SEALS •

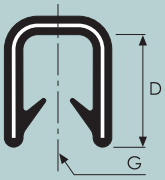

5240/0910
Black PVC edge trim
76m coil
Depth (D) = 14.75 mm
Grip range (G) = 8 mm

• EXTRUDED SEALS •

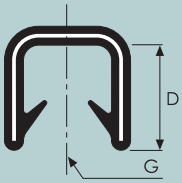

5240/0911
Black PVC edge trim
76m coil
Depth (D) = 14 mm
Grip range (G) = 9.5 mm

• EXTRUDED SEALS •

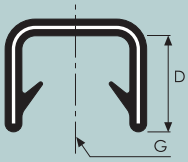

5240/0912
Black PVC edge trim
76m coil
Depth (D) = 13 mm
Grip range (G) = 12.5 mm

• EXTRUDED SEALS •

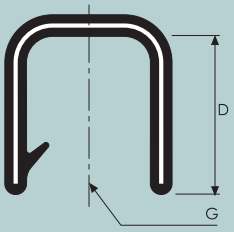

5244/2000
Black 'Jumbo' PVC edge trim
30m coil
Depth (D) = 21 mm
Grip range (G) = 16 mm

• EXTRUDED SEALS •

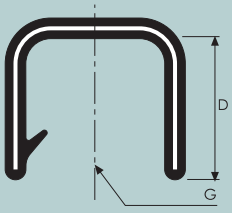

5244/3000
Black 'Jumbo' PVC edge trim
30m coil
Depth (D) = 19 mm
Grip range (G) = 19 mm

Door Seals

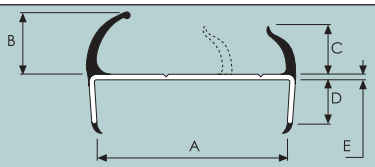

CONTAINER DOOR SEAL

P.V.C., rigid carrier with flexible lips.

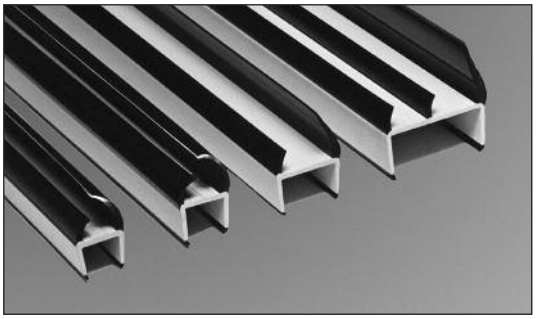

	A	B	C	D	E	F	G	H
0535/019	**To fit 19mm panel, 4m lengths (2 lips).**							
0535/0191	**To fit 19mm panel, 5m lengths (2 lips).**							
METRIC (mm)	*19*	*25.4*	*10*	*18*	*3*			
IMPERIAL (ins)	*0.75*	*1.00*	*0.40*	*0.71*	*0.12*			
0535/021	**To fit 21mm panel, 5m lengths (2 lips).**							
METRIC (mm)	*21*	*27*	*13*	*20*	*3*			
IMPERIAL (ins)	*0.83*	*1.06*	*0.51*	*0.80*	*0.12*			
0535/030	**To fit 30mm panel, 5m lengths (2 lips)**							
METRIC (mm)	*30*	*27*	*13*	*24*	*3*			
IMPERIAL (ins)	*1.18*	*1.06*	*0.51*	*0.95*	*0.12*			
0535/0531	**To fit 53mm panel, 5m lengths (3 lips).**							
METRIC (mm)	*53*	*30*	*13*	*28*	*3*			
IMPERIAL (ins)	*2.09*	*1.18*	*0.51*	*1.10*	*0.12*			
0535/083	**To fit 83mm panel, 5m lengths (3 lips).**							
METRIC (mm)	*83*	*28*	*20*	*21*	*3*			
IMPERIAL (ins)	*3.28*	*1.10*	*0.80*	*0.83*	*0.12*			

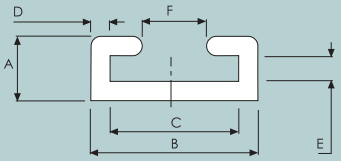

SEALING BUFFER STRIP

Extruded white ABS channel, for use with 2463/002 buffer strip. 2m length.

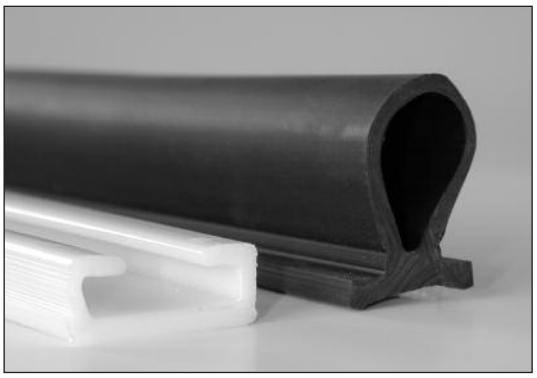

	A	B	C	D	E	F	G	H
2463/001					**Weight 280g/9.9oz**			
METRIC (mm)	*10*	*26*	*20*	*3*	*4*	*10*		
IMPERIAL (ins)	*0.39*	*1.02*	*0.79*	*0.12*	*0.16*	*0.40*		

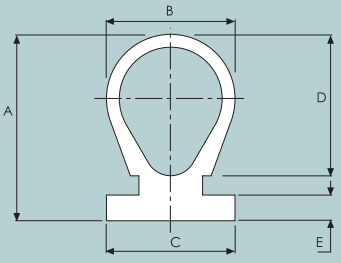

SEALING BUFFER STRIP

Extruded black PVC buffer strip, for use with 2643/001 channel. 2m length.

	A	B	C	D	E	F	G	H
2463/002					**Weight 690g/1.5lb**			
METRIC (mm)	*29*	*20*	*20*	*22*	*4*			
IMPERIAL (ins)	*1.14*	*0.79*	*0.79*	*0.87*	*0.16*			

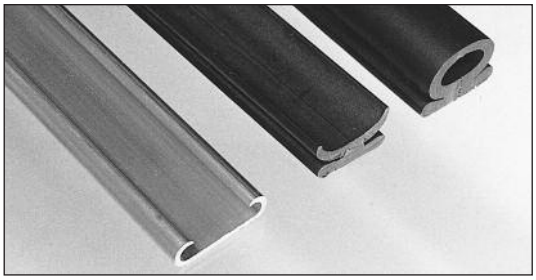

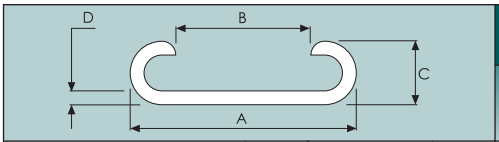

DOOR BUFFER STRIP

Extruded brass.
Carrier for 2464/002 & 2480/002.

	A	B	C	D	E	F	G	H
2464/001	**1981mm (6'6") lengths**							
METRIC (mm)	*30*	*18*	*9*	*1.8*				
IMPERIAL (ins)	*1.18*	*0.71*	*0.35*	*0.71*				

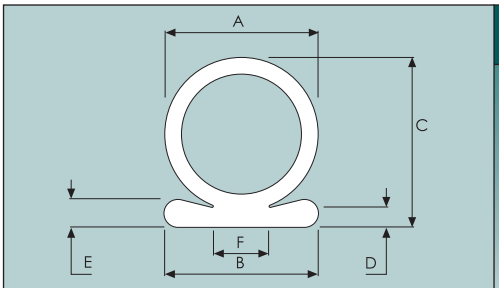

DOOR BUFFER STRIP

Male.
Extruded, black T.P.R.

	A	B	C	D	E	F	G	H
2464/002	**1981mm (6'6") lengths**							
METRIC (mm)	*20*	*24.5*	*23*	*3.5*	*4.5*	*9*		
IMPERIAL (ins)	*0.79*	*0.97*	*0.91*	*0.14*	*0.18*	*0.35*		

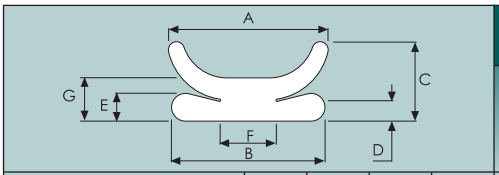

DOOR BUFFER STRIP

Female.
Extruded, black T.P.R.
(65° shore 'A')

	A	B	C	D	E	F	G	H
2480/002	**1981mm (6'6") lengths**							
METRIC (mm)	*26*	*25*	*13*	*3.5*	*4.5*	*9*	*7*	
IMPERIAL (ins)	*1.02*	*0.98*	*0.51*	*0.14*	*0.18*	*0.35*	*0.28*	

Brush Seals

5/32" Black nylon brush seal with aluminium alloy carrier

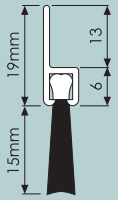

6312/1155
180° complete strip, ready assembled

3/16" Aluminium alloy extrusion only	
6312/225	*2.5m length, 180° alloy carrier*
6313/225	*2.5m length, 45° alloy carrier*
6314/225	*2.5m length, 90° alloy carrier*
3/16" Black nylon brush only	
6311/2255	*2.5m length, 25mm deep.*
6311/2385	*2.5m length, 38mm deep.*
6311/2505	*2.5m length, 50mm deep.*
6311/2755	*2.5m length, 75mm deep*

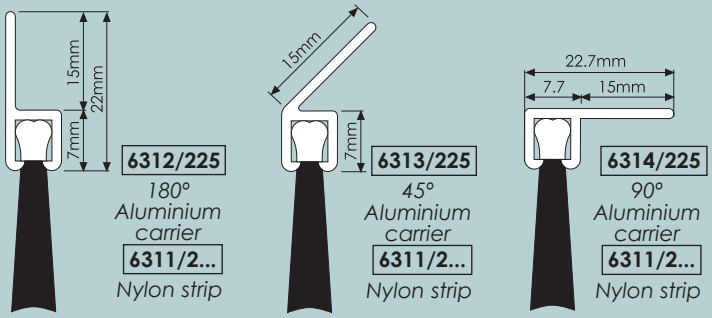

6312/225
180° Aluminium carrier
6311/2...
Nylon strip

6313/225
45° Aluminium carrier
6311/2...
Nylon strip

6314/225
90° Aluminium carrier
6311/2...
Nylon strip

5/16" Alloy extrusion only	
6312/325	*2.5m length, 180° alloy carrier*
6313/325	*2.5m length, 45° alloy carrier*
6314/325	*2.5m length, 90° alloy carrier*
5/16" Black nylon brush only	
6311/3255	*2.5m length, 25mm deep.*
6311/3385	*2.5m length, 38mm deep.*
6311/3505	*2.5m length, 50mm deep.*
6311/3645	*2.5m length, 64mm deep.*
6311/3755	*2.5m length, 75mm deep.*
6311/31015	*2.5m length, 101mm deep.*

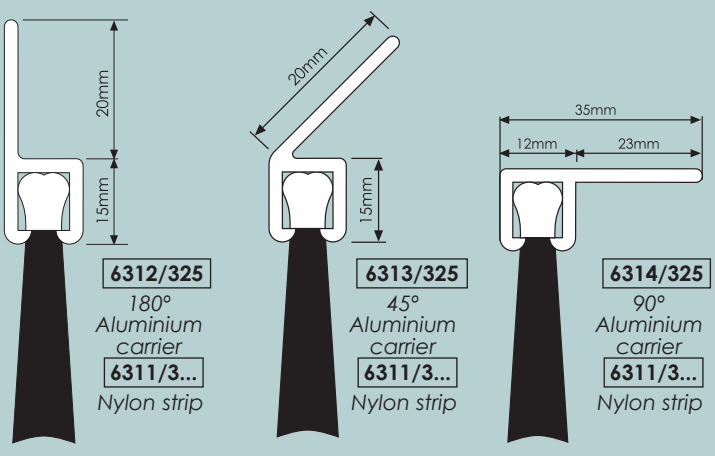

6312/325
180° Aluminium carrier
6311/3...
Nylon strip

6313/325
45° Aluminium carrier
6311/3...
Nylon strip

6314/325
90° Aluminium carrier
6311/3...
Nylon strip

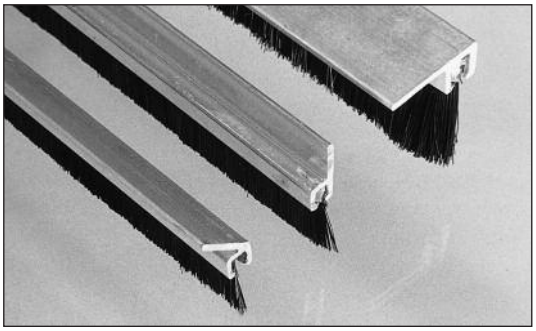

Other sizes are available, details on request.

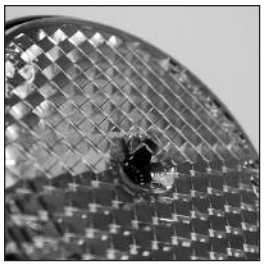

lighting &
electrical

BULKHEAD LAMP f1
NUMBER PLATE LAMPS f1
ROOF LAMPS f2-f3
FLUORESCENT LAMPS f4-f6
BEACONS f7
MARKER LAMPS f8-f10
REFLECTORS f11
LAMP CAGES f11
AUDIBLE WARNING DEVICES f11
LED LAMPS f12-f13
CONSPICUITY TAPE f14

LIGHTING & ELECTRICAL

section

f

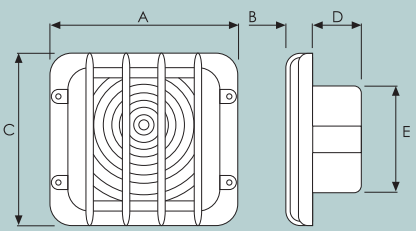

SQUARE BULKHEAD LAMP

Recessed mounting.
Painted aluminium frame, ABS lens & rubber casing.
No switch.
Max 21w bulb, twin contact SBC (not supplied).
Fitting instructions & cut out details included.

	A	B	C	D	E	F	G	H
4326/002					**Weight 410g/14.5oz**			
METRIC (mm)	*148*	*20.0*	*135*	*37.0*	*85.0*			
IMPERIAL (ins)	*5.83*	*0.80*	*3.35*	*1.46*	*3.35*			

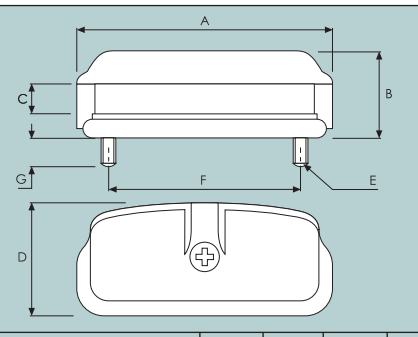

NUMBER PLATE LAMP

Plastic construction c/w 2 bulbs 12v 5w.
Steel back plate and rubber gasket fixing nuts and washers.

	A	B	C	D	E	F	G	H
4618/002	**Black finish**				**Weight 110g/3.9oz**			
METRIC (mm)	*110*	*40.0*	*14.0*	*50.0*	*M5*	*86.0*	*12.0*	
IMPERIAL (ins)	*4.33*	*1.58*	*0.55*	*1.97*		*3.39*	*0.47*	

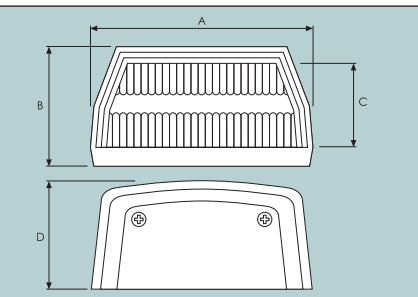

NUMBER PLATE LAMP

Black plastic with a steel back plate.
Supplied with a 12v 10w bulb.

	A	B	C	D	E	F	G	H
4618/003					**Weight 100g/3.5oz**			
METRIC (mm)	*106*	*56.0*	*52.0*	*43.0*				
IMPERIAL (ins)	*4.17*	*2.21*	*2.05*	*2.10*				

Roof Lamps

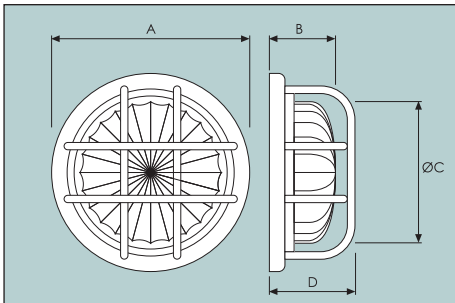

INTERIOR ROOF LAMP

Surface mounting c/w plastic lens.
Max 21w bulb, twin contact SBC (not supplied).

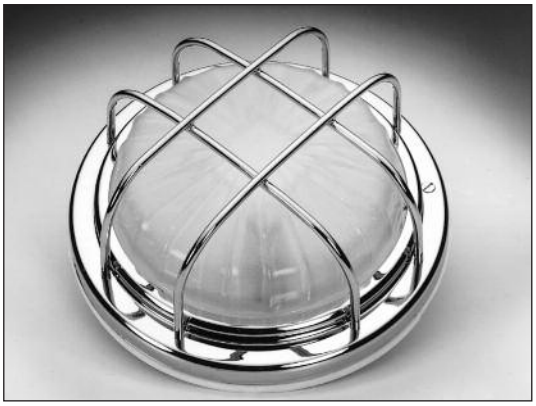

	A	B	C	D	E	F	G	H
4656/012					**Weight 410g/14.5oz**			
METRIC (mm)	*175*	*51.0*	*130*	*69.0*				
IMPERIAL (ins)	*6.90*	*2.00*	*5.12*	*2.72*				

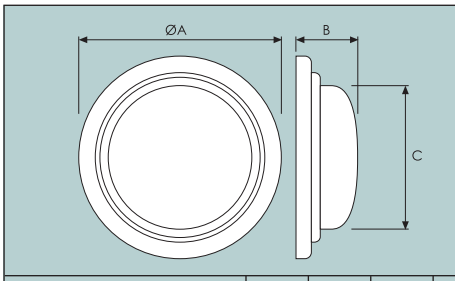

INTERIOR ROOF LAMP

Surface mounting c/w polypropylene lens.
No switch.
Max 21w bulb, twin contact SBC.

	A	B	C	D	E	F	G	H
0404/001	**Chrome rim, no bulb**				**Weight 170g/6oz**			
0404/501	**Chrome rim, with bulb**							
METRIC (mm)	*175*	*57.0*	*132*					
IMPERIAL (ins)	*6.90*	*2.24*	*5.20*					
0404/002	**Grey rim, no bulb**				**Weight 170g/6oz**			
0404/502	**Grey rim, with bulb**							
METRIC (mm)	*175*	*57.0*	*132*					
IMPERIAL (ins)	*6.90*	*2.24*	*5.20*					

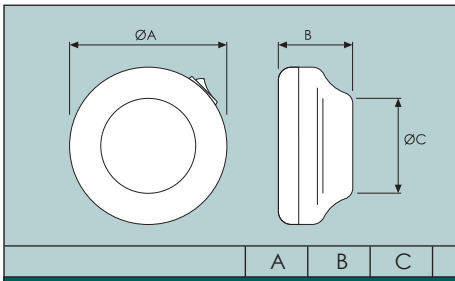

INTERIOR ROOF LAMP

Surface mounting with a metal base and plastic lens.
Max 21w bulb, single contact SBC (supplied).

	A	B	C	D	E	F	G	H
0405/001	**No switch**				**Weight 330g/11.7oz**			
0405/002	**With switch**							
METRIC (mm)	*140*	*62.0*	*80.0*					
IMPERIAL (ins)	*5.51*	*2.44*	*3.15*					

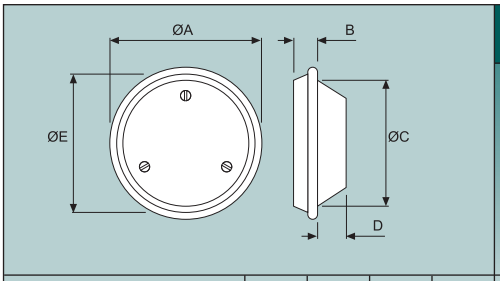

INTERIOR ROOF LAMP

Recessed mounting c/w plastic lens.
No switch.
Max 21w bulb, twin contact SBC (not supplied).

	A	B	C	D	E	F	G	H
0213/001					**Weight 300g/10.1oz**			
METRIC (mm)	*170*	*30.0*	*154*	*19.0*	*126*			
IMPERIAL (ins)	*6.70*	*1.18*	*6.06*	*0.75*	*4.96*			

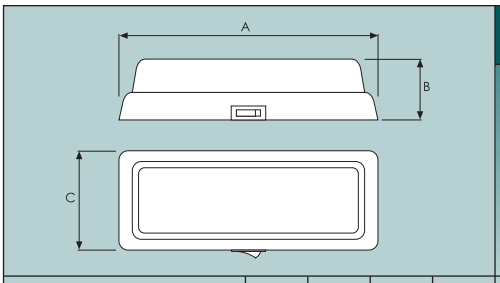

INTERIOR CAB LAMP

Surface mounting c/w plastic lens, grey plastic rim, two 12v bulbs and switch.
Max 20w bulbs.
(Single contact bulb).

	A	B	C	D	E	F	G	H
3147/001					**Weight 140g/5oz**			
METRIC (mm)	*200*	*42.0*	*70.0*					
IMPERIAL (ins)	*7.87*	*1.65*	*2.76*					

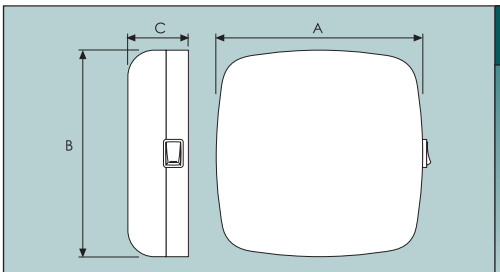

INTERIOR ROOF LAMP

Polycarbonate construction, with an opal lens.
5613/001 has an energy efficient, fluorescent bulb making it ideal for low energy consumption.

	A	B	C	D	E	F	G	H
0407/001	**12v, 10w halogen bulb**				**Weight 320g/11.3oz**			
5613/001	**12v, 10w fluorescent bulb**							
METRIC (mm)	*160*	*160*	*46.0*					
IMPERIAL (ins)	*6.30*	*6.30*	*1.81*					

Fluorescent Lamps

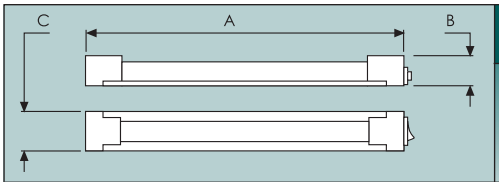

FLUORESCENT LAMP

Surface mounting with tube and wiring tails.
* Complete with switch.

	A	B	C	D	E	F	G	H
5650/001 *	**12v 8w Tube**				**Weight 190g/6.7oz**			
METRIC (mm)	*380*	*32*	*40*					
IMPERIAL (ins)	*15*	*1.26*	*1.58*					
5652/001	**24v 13w Tube**				**Weight 270g/9.5oz**			
METRIC (mm)	*610*	*32*	*40*					
IMPERIAL (ins)	*24*	*1.26*	*1.58*					

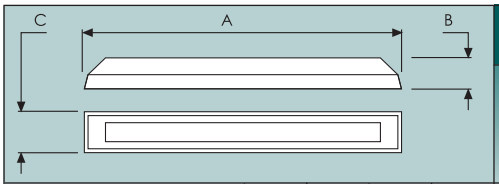

FLUORESCENT LAMP

Surface mounting with tube and wiring tails.
No switch.

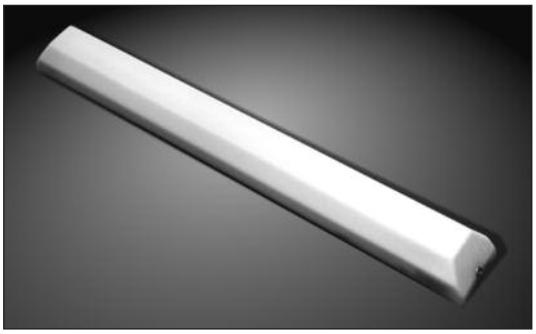

	A	B	C	D	E	F	G	H
5610/001	**12v 20w Tube**				**Weight 750g/1.7lb**			
5610/002	**24v 20w Tube**							
METRIC (mm)	*710*	*54*	*87*					
IMPERIAL (ins)	*28*	*2.13*	*3.43*					

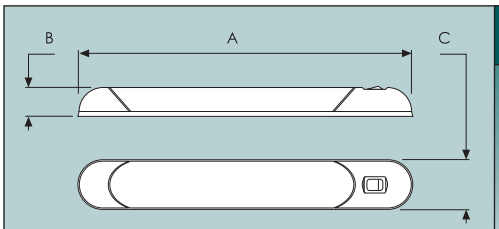

FLUORESCENT LAMP

Surface mounting.
Complete with a single tube & integral switch.

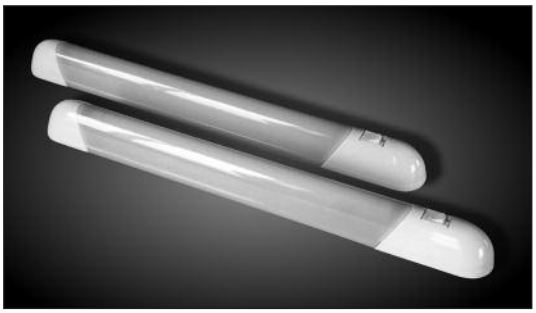

	A	B	C	D	E	F	G	H
5641/001	**12v 8w tube**				**Weight 230g/8.1oz**			
METRIC (mm)	*426*	*35*	*45*					
IMPERIAL (ins)	*16.8*	*1.38*	*1.77*					

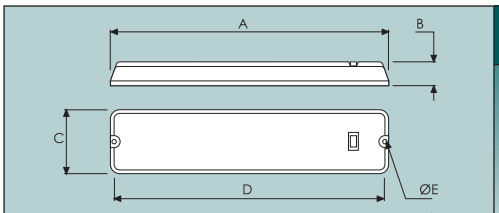

FLUORESCENT LAMP

Surface mounting with tube and wiring tails.
Polycarbonate lens with a pressed aluminium back-plate.

	A	B	C	D	E	F	G	H
5612/001	**12v, 2 x 8w, with switch**				**Weight 380g/13.4oz**			
5612/002	**12v, 2 x 8w, no switch**							
5612/003	**24v, 2 x 8w, with switch**							
5612/004	**24v, 2 x 8w, no switch**							
METRIC (mm)	*376*	*29*	*86*	*362*	*4*			
IMPERIAL (ins)	*14.8*	*1.14*	*3.39*	*14.3*	*0.16*			

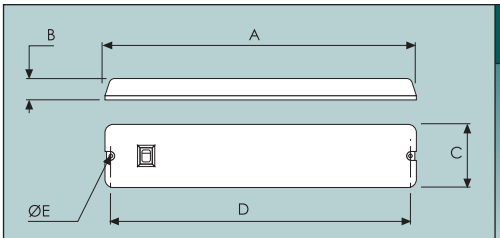

FLUORESCENT LAMP

A surface mounting lamp complete with switch & wiring tails.

	A	B	C	D	E	F	G	H
5640/001	**12v 8w, one tube**				**Weight 300g/10.6oz**			
5640/002	**12v 16w, two tubes**							
METRIC (mm)	*381*	*24*	*78*	*367*	*4.5*			
IMPERIAL (ins)	*15.0*	*0.95*	*3.07*	*14.5*	*0.18*			

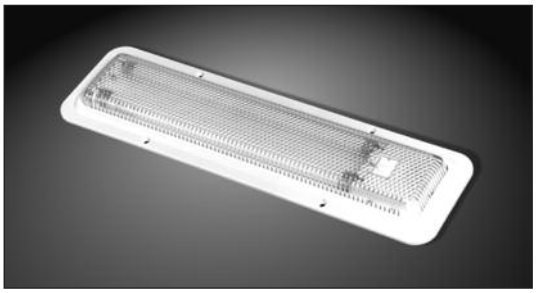

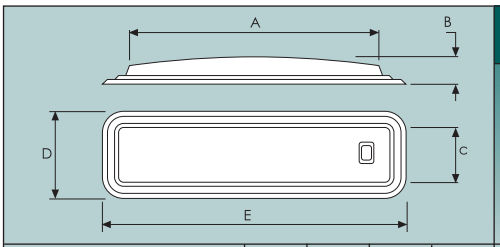

'SUPASLIM' TRI-LITE

Fluorescent light. Shade is moulded in clear GP styrene & base is moulded in plastic. NB. Dimensions D & E refer to lamp surround.

	A	B	C	D	E	F	G	H
5637/001	**12v 8w (Single tube)**				**Weight 285g/10oz**			
5637/002	**12v 16w (Two tubes)**				**Weight 310g/11oz**			
5637/0021	**24v 16w (Two tubes)**				**Weight 310g/11oz**			
5637/003	**12v 24w (Three tubes)**				**Weight 337g/12oz**			
METRIC (mm)	*381*	*24*	*78*	*117*	*420*			
IMPERIAL (ins)	*15*	*0.95*	*3.07*	*4.61*	*16.5*			
5637/004	**Ivory, lamp surround**							
5637/005	**White, lamp surround**							

A new concept in lighting which enables 1,2 or 3 tubes to be used in the same fitting to change light levels & ensure reliability when tubes fail.

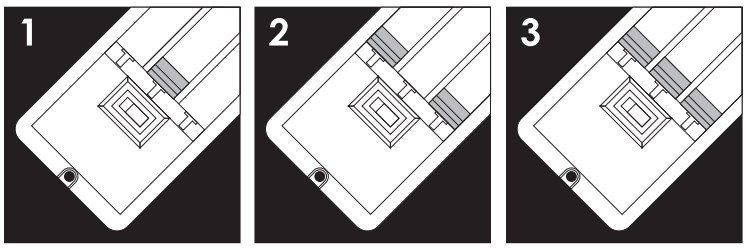

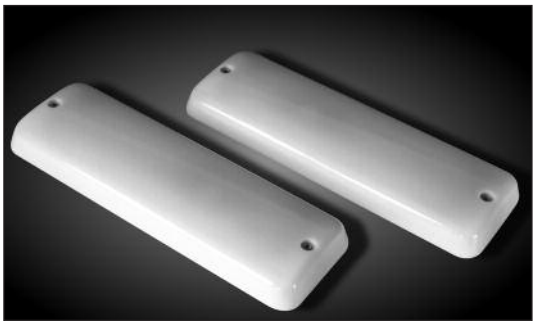

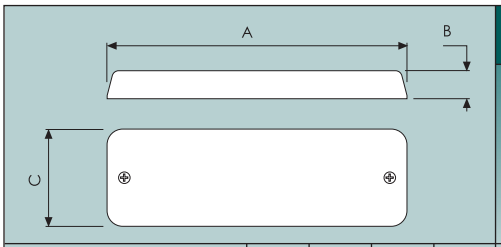

FLUORESCENT LAMP

A surface mounting lamp with two tubes & wiring tails.
No switch.

	A	B	C	D	E	F	G	H
5608/002	**12v 16w, Two tubes**				**Weight 540g/1.2lb**			
METRIC (mm)	*364*	*34*	*118*					
IMPERIAL (ins)	*14.3*	*1.34*	*4.65*					

Fluorescent Lamps

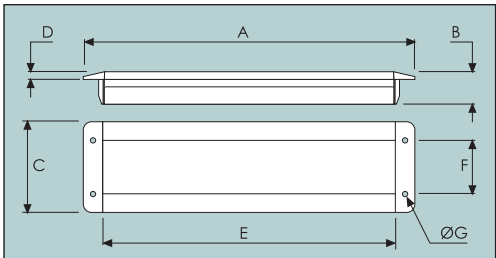

'FRIGO' LIGHT

An extruded polycarbonate body housing with plastic end caps, & white aluminium gear tray.

	A	B	C	D	E	F	G	H
5639/002	**24 Volt, 18w**				**Weight 1.2kg/2.7lb**			
METRIC (mm)	*715*	*46*	*100*	*6*	*680*	*50*	*4.5*	
IMPERIAL (ins)	*28.2*	*1.81*	*3.94*	*0.24*	*26.8*	*1.97*	*0.18*	

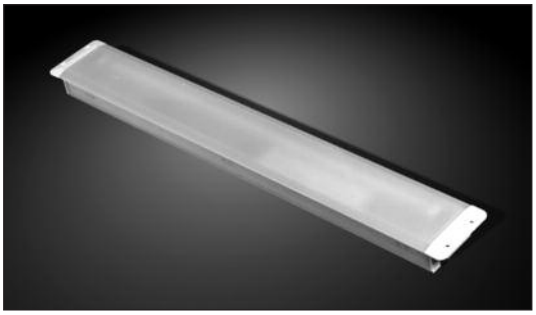

A combination halogen/fluorescent fitting for use in insulated vehicles or in applications where temperatures may vary frequently between -25°C and +40°C. At cold temperatures halogen lighting is used to combat condensation fog, but as the temperature inside the unit rises, it switches over to fluorescent operation. Sealed to IP65 to enable high pressure cleaning.

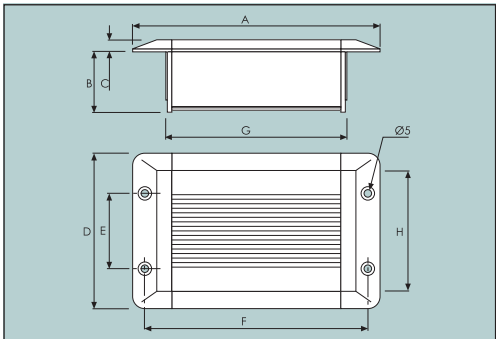

'COOLIGHT' LAMP

CE approved.
Polycarbonate diffuser & chassis with a powder coated steel tray.
15W single SBC bulb (supplied).

	A	B	C	D	E	F	G	H
5614/012	**12v (1.8A max)**				**Weight 230g/8.1oz**			
5614/024	**24v (900mA max)**				**Weight 230g/8.1oz**			
METRIC (mm)	*164*	*40.0*	*8.0*	*103*	*50.0*	*144*	*121*	*82.0*
IMPERIAL (ins)	*6.46*	*1.58*	*0.32*	*4.06*	*1.97*	*5.67*	*4.76*	*3.23*

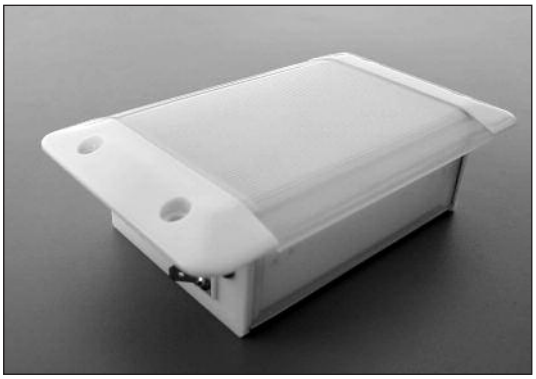

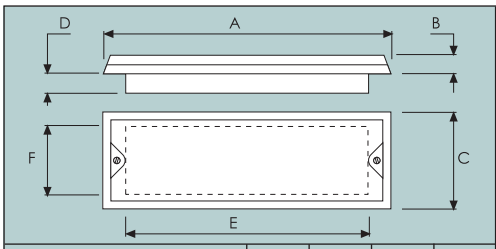

FLUORESCENT STRIP LAMP

Semi-recessed mounting with tube and wiring tails.
No switch.

	A	B	C	D	E	F	G	H
5609/001	**12v 16w Two tubes**				**Weight 500g/1.1lb**			
5609/002	**24v 16w Two tubes**							
METRIC (mm)	*365*	*20*	*115*	*20*	*310*	*80*		
IMPERIAL (ins)	*14.4*	*0.8*	*4.53*	*0.8*	*12.2*	*3.15*		
5611/001	**12v 20w Single tube**				**Weight 1.41kg/3.1lb**			
5611/002	**24v 20w Single tube**							
METRIC (mm)	*723*	*18*	*190*	*36*	*662*	*135*		
IMPERIAL (ins)	*28.5*	*0.71*	*7.5*	*1.42*	*26.1*	*5.32*		

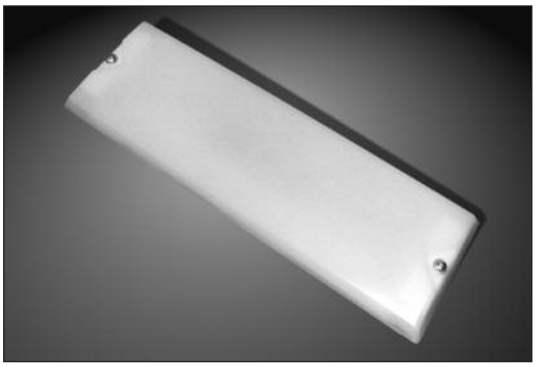

delta design
a division of NICOTECH Limited

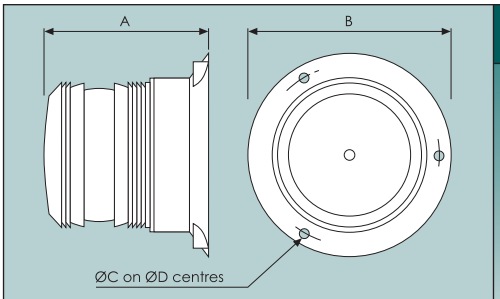

'ALPHA STAR' XENON BEACON

2W, single flash beacon to suit both 12 & 24v.
Power consuption:
145mA@12v;
110mA@24v.
Amber polycarbonate lens with an ABS base.
Weatherproof to IP65.
12 month guarantee.

	A	B	C	D	E	F	G	H
6526/001					**Weight 270g/9.5oz**			
METRIC (mm)	*120*	*148*	*7*	*130*				
IMPERIAL (ins)	*4.72*	*5.83*	*0.28*	*5.12*				

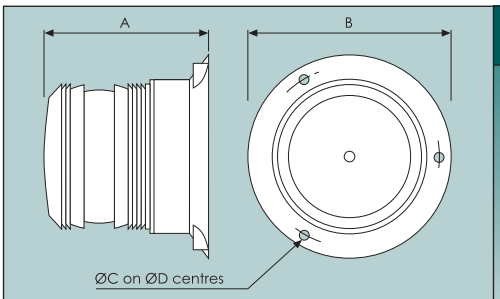

'BETA STAR' XENON BEACON

6W, single flash beacon to suit both 12 & 24v.
Power consuption:
600mA@12v;
300mA@24v.
Amber polycarbonate lens with an ABS base.
Weatherproof to IP65.
12 month guarantee.
Complies with CAA regulation CAP168 for airport use.

	A	B	C	D	E	F	G	H
6521/004					**Weight 270g/9.5oz**			
METRIC (mm)	*120*	*148*	*7*	*130*				
IMPERIAL (ins)	*4.72*	*5.83*	*0.28*	*5.12*				

delta design
a division of NICOTECH Limited

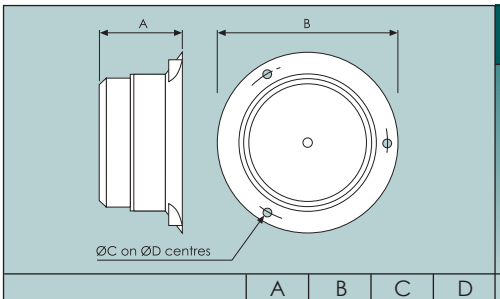

'REAR GUARD' XENON BEACON

5W, single flash beacon to suit both 12 & 24v.
Power consuption:
380mA@12v;
180mA@24v.
Amber polycarbonate lens with an ABS base.
Weatherproof to IP65.

	A	B	C	D	E	F	G	H
6528/001					**Weight 300g/10.6oz**			
METRIC (mm)	*70*	*148*	*7*	*130*				
IMPERIAL (ins)	*2.76*	*5.83*	*0.28*	*5.12*				

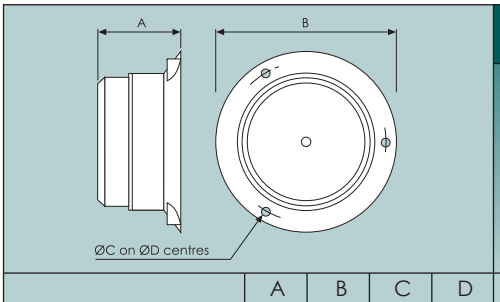

'HEDGEHOG' XENON BEACON

2W, single flash beacon.
Multi-volt technology.
Power consuption:
145mA@12v;
110mA@24v.
Amber polycarbonate lens with an ABS base.
Weatherproof to IP65.
12 month guarantee.

	A	B	C	D	E	F	G	H
6529/001					**Weight 300g/10.6oz**			
METRIC (mm)	*70*	*148*	*7*	*130*				
IMPERIAL (ins)	*2.76*	*5.83*	*0.28*	*5.12*				

Marker Lamps

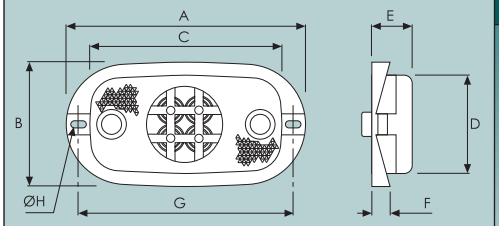

L.E.D MARKER LAMPS

LED technology with integral reflex reflector.
'E' approved & tested to IP.67.
Suitable for 12 & 24 volt systems.

	A	B	C	D	E	F	G	H
6514/001	**Amber side marker**				**Weight 70g/2.5oz**			
6514/002	**Red rear marker**				**Weight 70g/2.5oz**			
6514/003	**White front marker**				**Weight 70g/2.5oz**			
METRIC (mm)	*120*	*63*	*12*	*8*	*12*	*80*	*20*	*6*
IMPERIAL (ins)	*4.72*	*2.48*	*0.47*	*0.32*	*0.47*	*3.15*	*0.79*	*0.24*

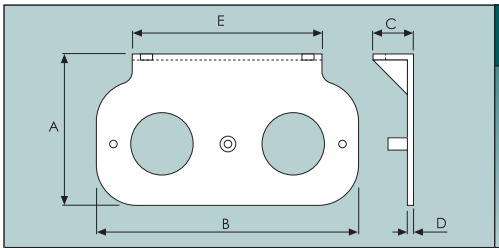

MOUNTING BRACKET

Moulded, black polypropylene
Suitable for horizontal mounting of 6514/001, 002 & 003.
Screw pack included.

	A	B	C	D	E	F	G	H
6514/101					**Weight 50g/1.8oz**			
METRIC (mm)	*75*	*96*	*20*	*3*	*130*			
IMPERIAL (ins)	*2.95*	*3.78*	*0.79*	*0.12*	*5.12*			

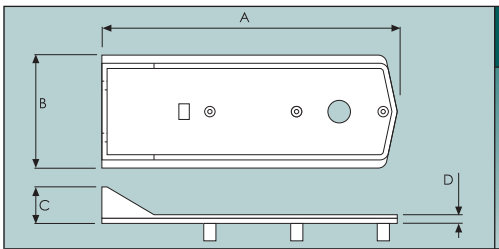

MOUNTING BRACKET

Moulded, black polypropylene
Suitable for vertical mounting of 6514/001, 002 & 003.
Screw pack included.

	A	B	C	D	E	F	G	H
6514/102					**Weight 60g/2.1oz**			
METRIC (mm)	*170*	*64*	*21*	*5*				
IMPERIAL (ins)	*6.69*	*2.52*	*0.83*	*0.20*				

Left: 6512/0001 Right: 6512/003

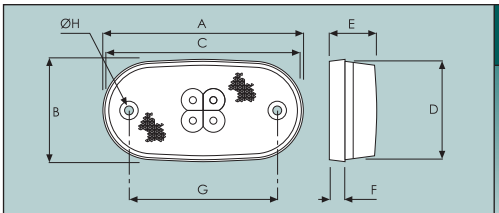

'LED' MARKER LAMP

Amber, side marker.
Impact resistant acrylic.
Certtified to EC 95/54.
Rated to IP67.
For brackets see below.

	A	B	C	D	E	F	G	H
6512/0001	**12v, 40mA**				**Weight 70g/2.5oz**			
6512/0002	**24v, 40mA**				**Weight 70g/2.5oz**			
METRIC (mm)	*104*	*54.0*	*101*	*51.0*	*23.0*	*8.0*	*76.0*	*4.50*
IMPERIAL (ins)	*4.10*	*2.13*	*4.00*	*2.00*	*0.91*	*0.32*	*2.99*	*0.18*

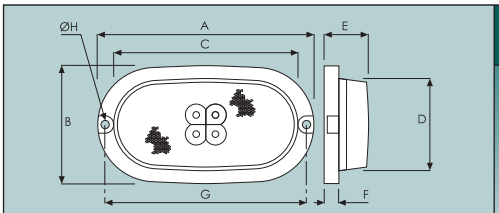

'LED' MARKER LAMP

Red, rear marker.
Impact resistant acrylic.
Certtified to EC 95/54.
Rated to IP67.

	A	B	C	D	E	F	G	H
6512/0003	**12v, 40mA**				**Weight 50g/1.8oz**			
6512/0004	**24v, 40mA**				**Weight 50g/1.8oz**			
METRIC (mm)	*120*	*63.0*	*98.0*	*49.0*	*21.0*	*10.0*	*108*	*4.5*
IMPERIAL (ins)	*4.72*	*2.48*	*3.86*	*1.93*	*0.83*	*0.39*	*4.25*	*0.18*

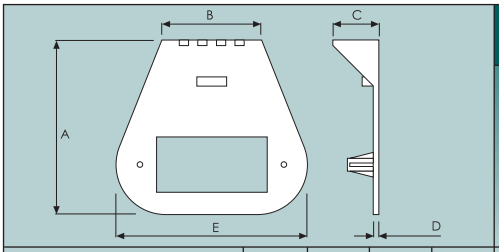

MOUNTING BRACKET

Moulded, black polypropylene
To mount amber side markers 6512/0001 & 0002 horizontally.

	A	B	C	D	E	F	G	H
6512/0011					**Weight 20g/0.7oz**			
METRIC (mm)	*95.0*	*48.0*	*25.0*	*3.00*	*104*			
IMPERIAL (ins)	*3.74*	*1.89*	*0.98*	*0.12*	*4.10*			

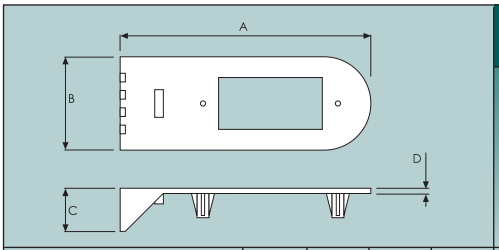

MOUNTING BRACKET

Moulded, black polypropylene
To mount amber side markers 6512/0001 & 0002 vertically.

	A	B	C	D	E	F	G	H
6512/0012					**Weight 20g/0.7oz**			
METRIC (mm)	*144*	*48.0*	*25.0*	*3.00*				
IMPERIAL (ins)	*5.67*	*1.89*	*0.98*	*0.12*				

Marker Lamps

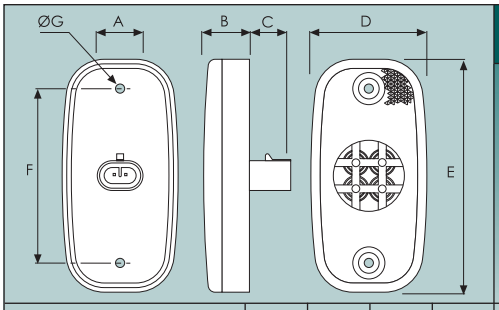

MARKER LAMP

24 volt, LED, amber side marker lamp.
Sealed to IP67 complete with connectors.
Integral reflex reflector.
Low power consumption - 60mA@28v.

	A	B	C	D	E	F	G	H
6510/101					**Weight 50g/1.8oz**			
METRIC (mm)	*20*	*20*	*19*	*50*	*100*	*76*	*4*	
IMPERIAL (ins)	*0.79*	*0.79*	*0.75*	*1.97*	*3.94*	*2.99*	*0.16*	

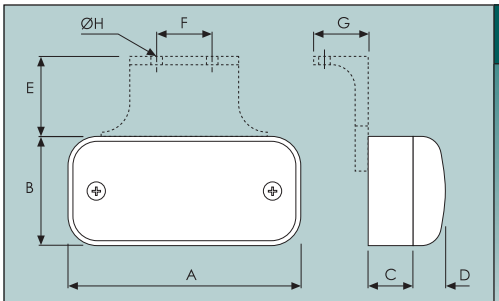

MARKER LAMPS

'E' approved.
Complete with grommet for cable exit hole.
Twin contact, bayonet bulb required - not supplied.
Suitable for 12 or 24 volt.

	A	B	C	D	E	F	G	H
6511/001	**Clear lens**				**Weight 90g/3.2oz**			
6511/003	**Amber lens**				**Weight 90g/3.2oz**			
6511/004	**Amber lens, + bracket**				**Weight 110g/3.9oz**			
6511/005	**Red lens**				**Weight 90g/3.2oz**			
METRIC (mm)	*110*	*55*	*20*	*14*	*38*	*30*	*24*	*5*
IMPERIAL (ins)	*4.33*	*2.17*	*0.79*	*0.55*	*1.50*	*1.18*	*0.95*	*0.20*

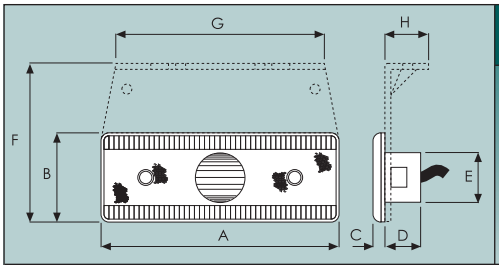

LOW PROFILE 'LED' MARKER LAMP

Amber, side marker lamp.
Suitable for 12 & 24 volt systems.
Polycarbonate lens with an integral reflex reflector.
Black ABS bracket.

	A	B	C	D	E	F	G	H
6513/0001	**Lamp only**				**Weight 50g/1.8oz**			
6513/0011	**Lamp & bracket**				**Weight 90g/3.2oz**			
METRIC (mm)	*120*	*45*	*8.0*	*19*	*25*	*80*	*114*	*25*
IMPERIAL (ins)	*4.72*	*1.77*	*0.32*	*0.75*	*0.98*	*3.12*	*4.49*	*0.98*

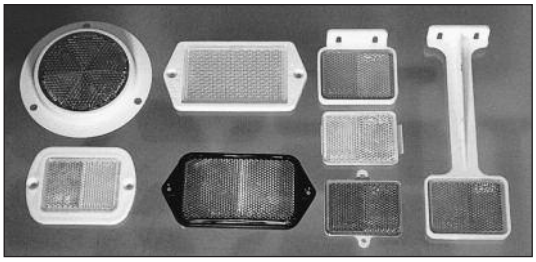

Left to right:
4800/005, 4805/005, 6505/009, 6505/010
6505/005
6505/011, 4805/002, 6505/007

REFLECTORS		
4800/005	**Red rear marker**	**Screw-on**
	Ø80mm (3.15") with white surround	
4805/002	**Amber side marker**	**Screw-on**
	94mm (3.7") x 54mm (2.13") oblong with black surround	
4805/005	**Amber side marker**	**Screw-on**
	100mm (3.94") x 46mm (1.8") oblong with white surround.	
4810/001	**Red rear marker**	**Screw-on**
	159mm (6.25") triangular	
6505/003	**Amber side marker**	**Self-adhesive**
6505/004	**Red rear marker**	**Self-adhesive**
6505/005	**White front marker**	**Self-adhesive**
6505/006	**Amber side marker**	**Screw-on**
6505/009	**Amber side marker**	**Screw-on**
	With short pendant bracket	
6505/010	**Amber side marker**	**Screw-on**
	With 178mm (7") pendant bracket	
	All 6505 markers = 60mm (2.4") x 46mm (1.8") oblong.	
	All dimensions refer to reflective area.	

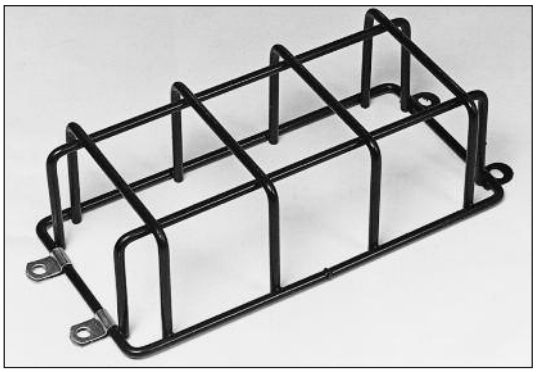

LAMP CAGES	
	Black plastic coated, steel wire.
5290/001	**Small lamp cage**
	279 mm (11") x 140 mm (5.5") x 89 mm (3.5")
5290/002	**Medium lamp cage**
	330 mm (13") x 152 mm (6") x 127 mm 95")
5290/003	**Large lamp cage**
	400 mm (15.75") x 203 mm (8") x 127 mm (5")
5290/101	**Zinc plated clips**

AUDIBLE WARNING DEVICES		
9031/001	**Bell, 12-24 volt**	**Weight 140g/5oz**
	Ø86mm (3.38") x 51mm (2") deep.	
9041/001	**Bell-push**	**Weight 40g/1.4oz**
	Ø60mm (2.38") x 32mm (1.25")deep	

LED Lamps

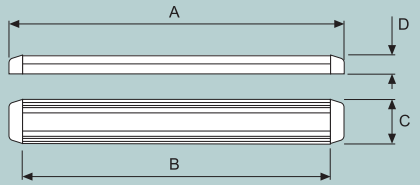

LED INTERIOR LAMP

White LED's with a polycarbonate lens, aluminium backplate & grey ABS end caps. Operating temperature -30°C to +80°C.

	A	B	C	D	E	F	G	H
5660/001	**12 volt DC**				**Weight 113g/4oz**			
METRIC (mm)	*260*	*250*	*38.0*	*15.0*				
IMPERIAL (ins)	*10.2*	*9.80*	*1.50*	*0.59*				
5661/001	**12 volt DC**				**Weight 273g/9.6oz**			
METRIC (mm)	*620*	*610*	*38.0*	*15.0*				
IMPERIAL (ins)	*24.4*	*24.0*	*1.50*	*0.59*				

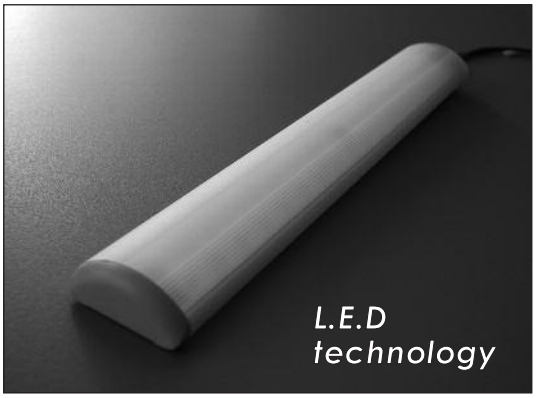

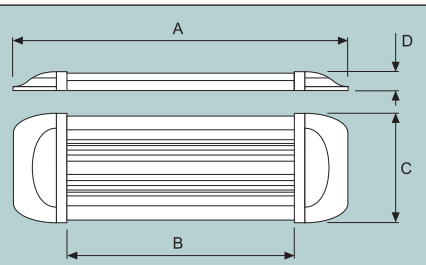

LED INTERIOR LAMP

White LED's with a polycarbonate lens, aluminium backplate & grey ABS end caps. Operating temperature -30°C to +80°C.

	A	B	C	D	E	F	G	H
5662/001	**12 & 24 volts DC**				**Weight 670g/1.5lb**			
METRIC (mm)	*350*	*236*	*112*	*16.0*				
IMPERIAL (ins)	*13.8*	*9.29*	*4.41*	*0.63*				

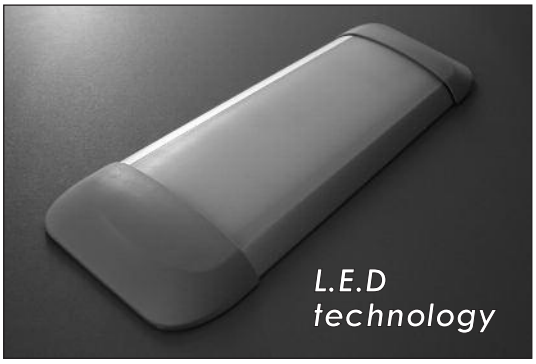

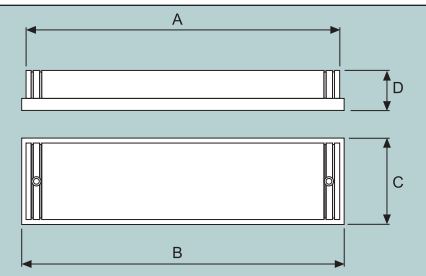

LED INTERIOR LAMP

White LED's with a polycarbonate lens & aluminium backplate. Operating temperature -30°C to +80°C.

	A	B	C	D	E	F	G	H
5663/001	**12 volts DC**				**Weight 190g/6.7oz**			
METRIC (mm)	*226*	*234*	*62.5*	*30.0*				
IMPERIAL (ins)	*8.90*	*9.21*	*2.46*	*1.18*				

5665/001 shown with 'finger touch' button switch on face.

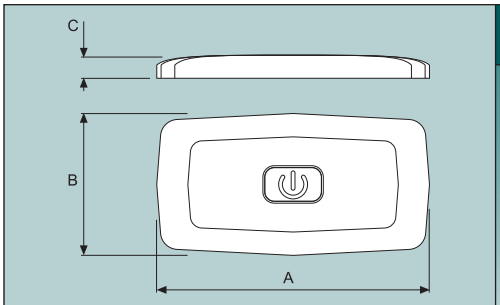

LED INTERIOR LAMP

White LED's with a polycarbonate lens, FR4 (fibreglass) back-plate & grey ABS body. Operating temperature -30°C to +80°C.

	A	B	C	D	E	F	G	H
5664/001	**12 volts DC, no switch**				**Weight 63g/2oz**			
5665/001	**12 volts DC, with switch**				**Weight 63g/2oz**			
METRIC (mm)	*135*	*70.0*	*10.0*					
IMPERIAL (ins)	*5.32*	*2.76*	*0.39*					

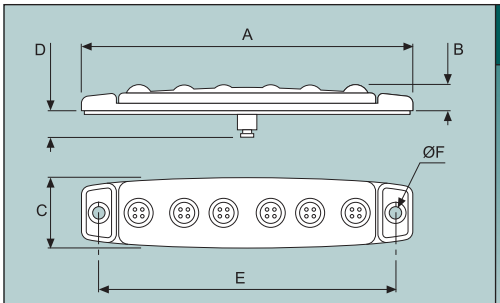

LED STEP LAMP

Suitable for both internal & external applications. White LED's with polycarbonate lens & ABS body. Operating temperature -30°C to +80°C. Conforms to E9 6412.

	A	B	C	D	E	F	G	H
5666/001	**12 volts DC**				**Weight 21g/0.7oz**			
METRIC (mm)	*96.0*	*7.40*	*20.0*	*5.80*	*86.0*	*3.60*		
IMPERIAL (ins)	*3.78*	*0.29*	*0.79*	*0.23*	*3.39*	*0.14*		

- *Long life - tested to 30,000 hours*
- *Waterproof*
- *Powered LED's*
- *E marked*
- *Ø65mm cut-out*

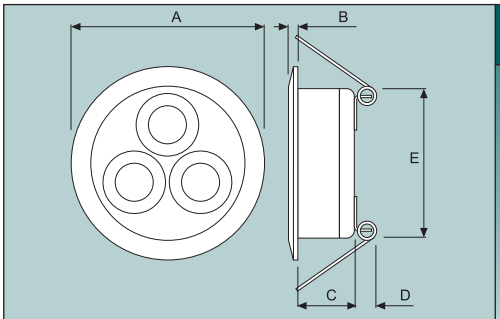

LED SPOT LIGHT

For internal use only. White LED's with polycarbonate lens & anodised aluminium body. Operating temperature -30°C to +80°C.

	A	B	C	D	E	F	G	H
5667/001	**12 & 24 volts DC**				**Weight 180g/6.4oz**			
METRIC (mm)	*82.0*	*4.00*	*23.7*	*10.3*	*63.0*			
IMPERIAL (ins)	*3.23*	*0.16*	*0.93*	*0.41*	*2.48*			

Conspicuity Tape

Conspicuity Tape - Meeting today's stringent safety regulations.

All tapes shown are fully tested to meet today's toughest safety regulations on retro-reflective contour markings and are approved for the following legislative requirements:

ECE - 104
Specifies the performance requirements for reflective contour and graphical markings on trucks and trailers

ECE - 48
Regulates the installation of light and light-signaling devices on vehicles, and explains which vehicles require contour markings and how it should be applied.

Directive 2007/35/CE
National regulation regarding the installation of lights on vehicles requiring all EU countries to follow the ECE-48 requirements as of July 2008.

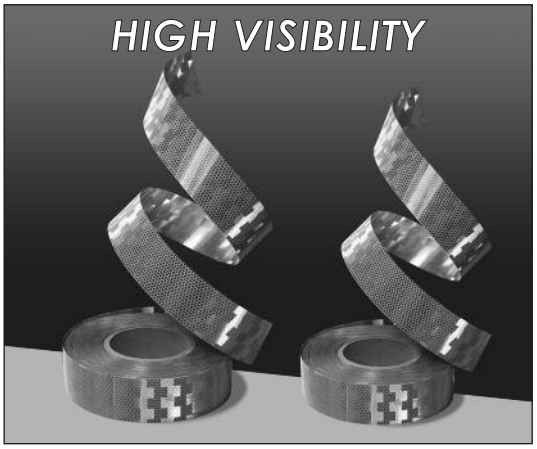

Conspicuity Tape for Rigid Surfaces	
	50.8mm wide x 50m roll *Self adhesive, continuous.* *Class C, 104R-000001 - approval mark*
4820/509	**White**
4820/508	**Yellow**
4820/510	**Red**

Conspicuity Tape for Flexible Surfaces	
	50.8mm wide x 50m roll *Self adhesive, segmented squares.* *Class C, 104R-000002 - approval mark*
4820/512	**White**
4820/511	**Yellow**

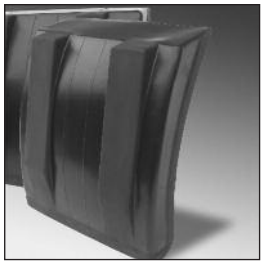

wings &
fittings

section

g

WINGS & FITTINGS

SINGLE ARCH MUDGUARDS.....g1-g3
FLAT TOP MUDGUARDS.....g3
TANDEM MUDGUARDS.....g4
WING SPATS.....g4
MUDGUARD STAYS.....g5
MUDGUARD BRACKET CLAMPS.....g6-g7
SPRAY SUPPRESSION.....g8

Bracket & stay **NOT** included, shown for visual purposes only

FEATHERWING

thermoplastic single~arch mudguards

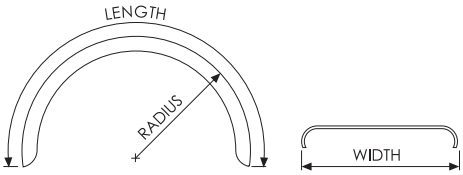

Mudguards

PART NUMBER	NOMINAL DIMENSIONS			TYRE SIZES					
	WIDTH	RADIUS	LENGTH						
• SINGLE WHEEL • SINGLE WHEEL • SINGLE WHEEL • SINGLE WHEEL • SINGLE WHEEL• SINGLE WHEEL •									
6777/001	205 (8")	410 (16")	1370 (54")	175 R 13 175 R 14 195/75 R 14	175/70 R 13 185 R 14 6.50 x 14	185/70 R 13 195 R 14 7.00 x 14	195/70 R 13 165/75 R 14 6.00 x 15	6.70 R 13 175/75 R 14 6.00 x 16	165 R 14 185/75 R 14
6777/050	255 (10")	470 (18.5")	1600 (63")	205 R 14 7.00 R 15 235/75 R 15 205/75 R 16 7 x 16 7 R 17.5 235/75 R 17.5	215 R 14 7.50 R 15 185 R 15 215/75 R 16 7.5 x 16 8 R 17.5 245/70 R 17.5	205/75 R 14 195/70 R 15 195 R 15 225/70 R 16 8.25 R 16 8.5 R 17.5	215/75 R 14 205/80 R 15 215 R 15 225/75 R 16 195 R 16 205/75 R 17.5	6.70 R 14 225/70 R 15 185/75 R 16 6 x 16 205 R 16 215/75 R17.5	6.70 R 15 225/75 R 15 195/75 R 16 6.50 x 16 215 R 16 225/75 R 17.5
6777/075	275 (10.75")	408 (16")	1246 (56")	215/70R 15	195R 15	205R 15	205/80R 15	215R 16S	205R 16
6777/250	420 (16.5")	635 (25")	2070 (81.5")	11 R 20 12/80 R 22.5 14.5 R 24	12.5 R 20 15 R 22.5 285/75 R 24.5	14/80 R 20 295/80 R 22.5 305/75 R 24	375/75 R 20 365/80 R 22.5 11 R 24.5	365/80 R 20 375/70 R 22.5	11 R 22 385/65 R 22.5
• TWIN WHEEL • TWIN WHEEL • TWIN WHEEL • TWIN WHEEL • TWIN WHEEL • TWIN WHEEL • TWIN WHEEL •									
6777/200	420 (16.5")	445 (17.5")	1450 (57")	6.70 R 14 175/75 R 16	6.70 R 15	185 R 15	6.00 R 16	6.50 R 16	175 R 16
6777/350	425 (16.75")	410 (16")	1289 (50.75")	5.60 R 12 175 R 13 175 R 14	155/70 R 12 185/70 R 13 175/75 R 14	155 R 13 195/70 R 13 185 R 14	155/70 R 13 6.70 R 13 185/75 R 14	165 R 13 165 R 14	175/70 R 13 165/75 R 14
6777/450	480 (19")	480 (19")	1510 (59.5")	205/75 R 14 205 R 16 8 R 17.5	205/65 R 15 215 R 16	205/80 R 15 205/75 R 16	7.00 R 15 7 R 16	7.50 R 15 8 R 16	7.00 R 16 7 R 17.5
6777/750	500 (19.5")	500 (19.5")	1653 (63")	215 R 14 7.50 R 16	215/75 R 14 8.50 R 17.5	225/70 R 15 205/75 R 17.5	225/75 R 15	215/75 R 16	225/70 R 16
6777/800	530 (21")	580 (23")	1860 (73")	9.00 R 16 9 R 22.5	8.25 R 17 215/70 R 22.5	9.50 R 19.5 215/75 R 22.5	7.50 R 20	8.25 R 20	8 R 22.5
6777/850	530 (21")	510 (20")	1600 (63")	8.25 R 15 215/75 R 17.5 7.00 R 20	235/75 R 15 225/75 R 17.5	225/75 R 16 235/75 R 17.5	8.25 R 16 8 R 19.5	9.5 R 17.5 9.00 R 19.5	10 R 17.5 6.50 R 20
6777/1000	610 (24")	535 (21")	1675 (66")	10 R 15 265/70 R 17.5	225/75 R 15 275/75 R 17.5	255/75 R 15 245/70 R 19.5	265/70 R 15 265/70 R 19.5	245/70 R 17.5 285/70 R 19.5	245/75 R 17.5
6777/1050	615 (24.25")	635 (25")	1995 (78.5")	11.00 R 16	10.00 R 20	11.00 R 22	11 R 22.5	275/80 R 22.5	
6777/1100	650 (25.5")	650 (25.5")	2040 (80.25")	11.00 R 20	285/75 R 22.5				
6777/1300	670 (26.5")	685 (27")	2160 (85")	12.00 R 20	12 R 22.5	11 R 24	12.00 R 24	11 R 24.5	

• Unique, ribbed styling with integral reflectors •

• Manufactured from 'Super Linear' polyethylene, giving increased rigidity with greater • impact & 'cold crack' resistance.

• Resistance to wider range of corrosive chemicals. •

• Excellent design aesthetics & greater performance achieved when • used in conjuction with 6781 brackets (page g6).

Mudguards

PARLOK
thermoplastic single-arch mudguards

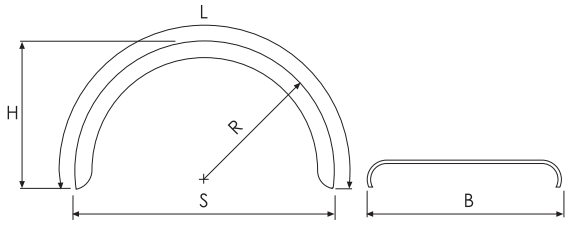

PART NO.	B	L	R	S	H	WHEELS	TYRE RECOMMENDATION
6786/404	415	1420	420	840	460	TWIN	750R14, 185R15, 670R15, 175R16, 175/75R16, 185/75R16
6786/450	450	1300	420	840	410	TWIN	175-185R16, 175R13, 185R13, 6.50x14, 6.70x14, 7.00x14, 165R14, 165R16, , 205/80R15
6786/405	405	1930	635	1270	595	SINGLE	385/65R22.5, 365/80R20, 11R22.5, 15R22.5, 12R22.5, 13R22.5, 13/70R22.5, 13/80R22.5, 13.00R20, 14.25/80R20
6786/455	455	1650	480	960	560	TWIN	205/65R17.5, 8.5R17.5, 8.25x15, 7.00x16, 7.25x16, 7.50x16, 8.25x16, 8.25x17
6786/500	500	1700	500	1000	510	TWIN	235R14, 225/75R16, 9R16, 235R16, 215/75R17.5, 225/75R17.5, 9R17.5, 7.50R20
6786/540	540	1700	500	1000	500	TWIN	235R14, 10R15, 255/75R15, 225/75R16, 9R16, 235R16, 215/75R17.5, 225/75R17.5, 9R17.5, 245/70R17.5, 235/75R17.5
6786/550	550	1700	550	1100	530	TWIN	245/70R19.5, 10R15, 255/75R15, 245/70R17.5, 9.5R17.5, 9R19.5, 245/75R19.5, 245/70R19.5, 8R22.5, 9R22.5, 255/70R22.5, 10/70R22.5
6786/610	610	1930	640	1270	610	TWIN	11R22.5, 10.00x20, 11.00x20, 10R22.5, 275/80R22.5, 11/70R22.5, 9.00R20, 275/70R22.5
6786/650	650	1900	620	1260	590	TWIN	305/70R19.5, 12.00x20, 12/70R22.5, 295/80R22.5, 305/70R22.5, 275/70R22.5, 295/75R22.5, 285/80R22.5
6786/6506	650	2100	630	1260	730	TWIN	12R22.5, E20, 295/80R22.5, 305/75R24.5, 295/75R22.5, 285/80R22.5
6786/670	670	2090	670	1360	660	TWIN	12.00x20, 12R22.5, 305/75R24.5, 315/75R24.5
6786/680	680	2100	630	1260	730	TWIN	12/70R22.5, 12.00x20, 12R22.5, 13R22.5, 315/70R22.5, 315/80R22.5, 315/75R24.5, 12/80R22.5

Mudguards are supplied in pairs & packed in a protective polyethylene sleeve. Other sizes available on request.

QUALITY ASSURED
process type manufacturing technique ensures accurate material thickness.

RESILIENT
excellent resistance to tear and impact damage

DURABLE
high resistance to temperature extremes; -50°C to +80°C

TOUGH
manufactured from high density polyethylene

www.albert-jagger.co.uk Walsall: 01922 471000 Heywood: 01706 692110 Romsey: 01794 525870

CENTOPLAS®

thermoplastic single~arch mudguards

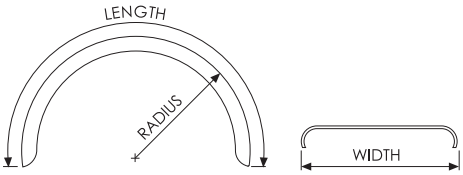

• SINGLE-ARCH CENTOPLAS • SINGLE-ARCH CENTOPLAS• SINGLE-ARCH CENTOPLAS •									
PART NUMBER	NOMINAL DIMENSIONS			TYRE SIZES					
	WIDTH	RADIUS	LENGTH						
3021/060	150 (6")	290 (11.5")	965 (38")	4.00R 10					
3021/070	180 (7")	380 (15")	1220 (48")	5.90R 15					
3021/080	205 (8")	405 (16")	1370 (54")	6.40R 14	6.50R 14	6.50R 15	7.00R 14	165R 14	165R 16
				185R 16	205R 14				
3021/090	230 (9")	460 (18")	1525 (60")	7.00R 15	7.00R 16	18R 17.5	215/75R 17.5	225/75 17.5	235/75R 17.5
				215R 14					

FEATHERWING

thermoplastic single~arch mudguards

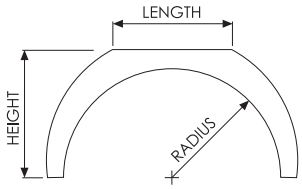

• FLAT-TOP CENTOPLAS • FLAT-TOP CENTOPLAS • FLAT-TOP CENTOPLAS • FLAT-TOP CENTOPLAS •									
PART NUMBER	NOMINAL DIMENSIONS				TYRE SIZES				
	WIDTH	HEIGHT	RADIUS	LENGTH					
6777/430	470 (18.5")	525 (20.5")	500 (19.5")	500 (19.5")	7.50 R 16	8.5 R 17.5	205 R 16		
6777/440	470 (18.5")	450 (18")	450 (18")	500 (19.5")	185 R 14	205 R 14	215 R 14	185 R 15	175 R 16
					185 R 16	7.25 R 16			
6777/650	500 (19.5")	580 (23")	500 (19.5")	505 (20")	205 R 16	205/75 R 17.5	215 R 16	8 R 17.5	8.25 R 15
					8.5 R 17.5				
6777/875	550 (21.5")	560 (22")	555 (21.75")	650 (25.5")	8.25 R 15	225/75 R 16	8 R 18	8.5 R 16	215/75 R 17.5
					225/75 R 17.5				
6777/1110	650 (25.5")	715 (28")	660 (26")	750 (29.5")	11 R 22.5	12 R 22.5	295/80 R 22.5		

- FLAT-TOP DESIGN FOR DIRECT FIXING.
- SUPERIOR BUMP AND COLLISION RESISTANCE.
- ADVANCED COLD CRACK PROPERTIES.
- RESISTANT TO MOST CHEMICALS.
- FULL 2.2% CARBON BLACK CONTENT (BLACK GUARDS) OR UV STABILISER PACKAGE (ALL COLOURS) TO ENSURE EXCELLENT RESISTANCE TO THE ELEMENTS.
- AVAILABLE IN BLACK, AND OVER 60 FLEET COLOURS

Mudguards

CENTOPLAS®

thermoplastic tandem mudguards

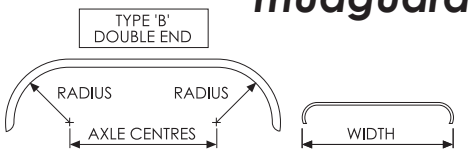

• SMALL TANDEMS • SMALL TANDEMS • SMALL TANDEMS • SMALL TANDEMS • SMALL TANDEMS •						
PART NUMBER	NOMINAL DIMENSIONS			TYPE	TYRE SIZES	
	WIDTH	RADIUS	AXLE CENTRE			
3020/6240	150 (6")	330 (13")	610 (24")	B	145 x 10S	520 x 10S
3020/7330	180 (7")	380 (15")	838 (33")	B	165 x 13S	560 x 13S
3020/8290	205 (8")	380 (15")	736 (29")	B	175 x 13S	670 x 13S

- SUPERIOR BUMP AND COLLISION RESISTANCE
- ADVANCED COLD CRACK PROPERTIES
- RESISTANCE TO MOST CHEMICALS.
- ALL MUDGUARDS ARE PACKED IN A PROTECTIVE POLYTHENE BAG

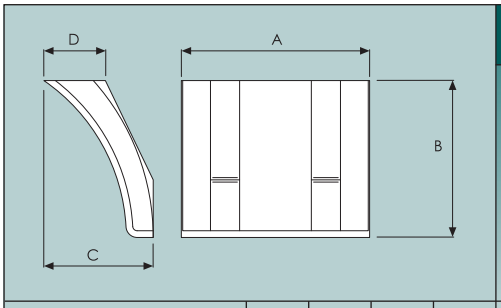

WING SPAT

Black thermoplastic.
Unique lightweight styling – advanced design.
Full 2.2% Carbon Black content to ensure resistance to the elements.
Resistance to most chemicals.
Excellent impact and cold crack resistance.

	A	B	C	D	E	F	G	H
6777/3032								
METRIC (mm)	*300*	*320*	*200*	*130*				
IMPERIAL (ins)	*11.8*	*12.6*	*7.87*	*5.12*				
6777/4035								
METRIC (mm)	*400*	*350*	*230*	*130*				
IMPERIAL (ins)	*15.8*	*13.8*	*9.06*	*5.12*				
6777/4540								
METRIC (mm)	*450*	*400*	*245*	*145*				
IMPERIAL (ins)	*17.7*	*15.8*	*9.65*	*5.71*				
6777/5250								
METRIC (mm)	*520*	*500*	*290*	*180*				
IMPERIAL (ins)	*20.5*	*19.7*	*11.4*	*7.09*				
6777/6050								
METRIC (mm)	*600*	*500*	*290*	*180*				
IMPERIAL (ins)	*23.6*	*19.7*	*11.4*	*7.09*				
6777/6550								
METRIC (mm)	*650*	*600*	*300*	*180*				
IMPERIAL (ins)	*25.6*	*23.6*	*11.8*	*7.09*				
6777/6960								
METRIC (mm)	*690*	*600*	*300*	*180*				
IMPERIAL (ins)	*27.2*	*23.6*	*11.8*	*7.09*				

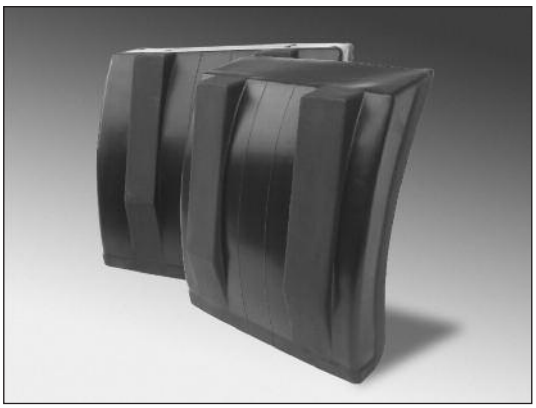

FEATHERWING

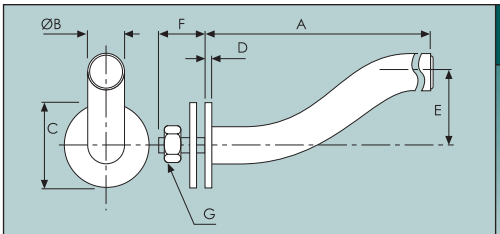

CRANKED MUDGUARD STAY

Zinc plated steel.
Single bolt fixing with washer & lock nut supplied.

	A	B	C	D	E	F	G	H
3029/5550					**Weight 1.6kg/3.5lb**			
METRIC (mm)	*550*	*34.0*	*66.0*	*6.00*	*100*	*40.0*	*M16*	
IMPERIAL (ins)	*21.7*	*1.34*	*2.60*	*0.24*	*3.94*	*1.58*		
3029/5650					**Weight 1.8kg/4lb**			
METRIC (mm)	*650*	*34.0*	*66.0*	*6.00*	*100*	*40.0*	*M16*	
IMPERIAL (ins)	*25.6*	*1.34*	*2.60*	*0.24*	*3.94*	*1.58*		

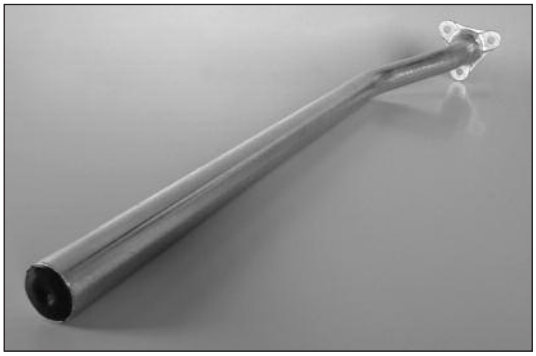

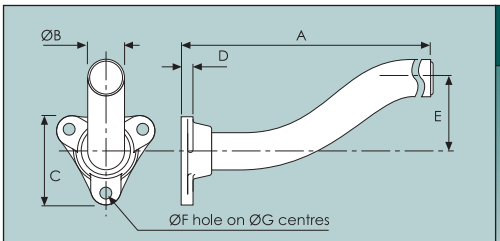

CRANKED MUDGUARD STAY

Zinc plated steel.
3 point fixing.

	A	B	C	D	E	F	G	H
3029/7800					**Weight 2.2kg/4.9lb**			
METRIC (mm)	*800*	*34.0*	*86.0*	*10.0*	*100*	*10.0*	*80.0*	
IMPERIAL (ins)	*31.5*	*1.34*	*3.39*	*0.39*	*3.94*	*0.39*	*3.15*	

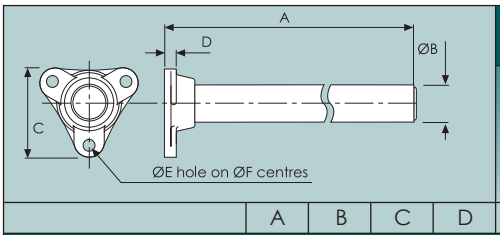

STRAIGHT MUDGUARD STAY

Zinc plated steel.
3 point fixing.

	A	B	C	D	E	F	G	H
3029/4660					**Weight 1.8kg/4lb**			
METRIC (mm)	*660*	*34.0*	*86.0*	*10.0*	*10.0*	*80.0*		
IMPERIAL (ins)	*26.0*	*1.34*	*3.39*	*0.39*	*0.39*	*3.15*		

Mudguard Bracket Clamps

WING STAY BRACKET CLAMPS

A unique bracket clamp system designed for use with the new generation 6777 mudguards (refer g1):

- Lightweight plastic design
- Unique stylish appearance
- No unsightly nuts & bolts
- Bracket clamps hold the stay off the mudguard thus eliminating water traps - reducing rust problems
- Quick & easy to fit - faster routine maintenance
- Innovative clamping action 'Grips' the mudguard securely.

6781/00354	**Suitable for Ø35mm tubes**
	Complete kit suitable for one mudguard includes 4 bracket sets.
6781/00424	**Suitable for Ø42mm tubes**
	Complete kit suitable for one mudguard includes 4 bracket sets.

Main image shows one complete set, each assembly consists of 4 sets. Inset shows brackets fitted to wing stay (not included - refer g5).

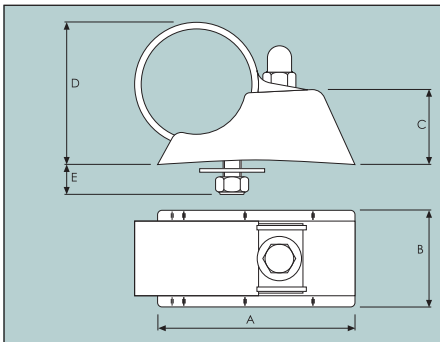

'UNIFIX' MUDGUARD BRACKET CLAMPS

Black, polyamide plastic.
Fits to mudguards by only one bolt.
Adjustable to fit stays from Ø32mm to Ø42mm.
Full fitting instructions supplied.

	A	B	C	D	E	F	G	H
3027/005	**Pack of 4**				**Weight 110g/3.9oz**			
METRIC (mm)	*90.0*	*44.0*	*34.0*	*68.0*	*15.0*			
IMPERIAL (ins)	*3.54*	*1.73*	*1.34*	*2.68*	*0.59*			

Mudguard Bracket Clamps

U BOLT CLAMP KITS

A complete kit contains enough components to fit one pair of mudguards. Each kit consists of:

- 4 x galvanised steel back plates
- 8 x zinc plated steel U bolts
- 8 x black neoprene, anti-slip sleeves
- 16 x flat steel washers
- 16 x nyloc nuts

6777/0035	**Suits mudguards up to 570mm wide**
6777/0037	**Suits mudguards over 570mm wide**
	Assemblies to suit Ø35mm wingstays
6777/0042	**Suits mudguards up to 570mm**
6777/0044	**Suits mudguards over 570mm**
	Assemblies to suit Ø42mm wingstays

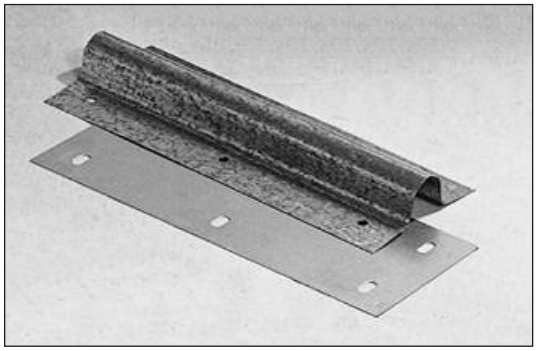

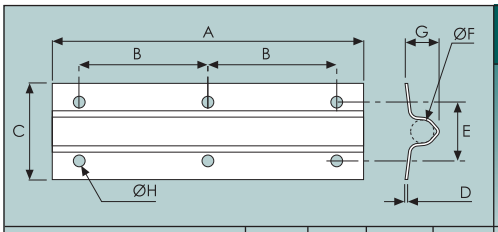

SADDLE BRACKET

Galvanised, mild steel.
For use with 3030/022 backplate.
To suit Ø34mm stays.

	A	B	C	D	E	F	G	H
3030/021					**Weight 370g/13oz**			
METRIC (mm)	*400*	*165*	*109*	*1.00*	*71.0*	*34.0*	*36.0*	*9.00*
IMPERIAL (ins)	*15.8*	*6.50*	*4.29*	*0.04*	*2.80*	*1.34*	*1.42*	*0.35*

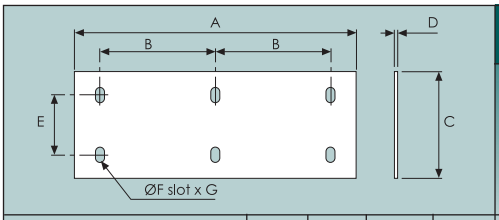

BACKPLATE

Galvanised, mild steel.
For use with 3030/021 saddle bracket.

	A	B	C	D	E	F	G	H
3030/022					**Weight 370g/13oz**			
METRIC (mm)	*400*	*165*	*150*	*1.00*	*66.0*	*10.0*	*20.0*	
IMPERIAL (ins)	*15.8*	*6.50*	*5.91*	*0.04*	*2.60*	*0.39*	*0.79*	

Spray Suppression

SPRAY SUPPRESSION MUDFLAPS

Renowned as a market leading spray suppression system, Clear Pass mudflaps are fitted as standard by many truck and trailer OEMs. They can reduce wheel rain spray by over 70%, providing safer passing opportunities for other road users;

- Lightweight - only 5.75kg per square metre
- Quick & easy to fit - no cutting required
- Excellent anti-sail properties
- BS AU200/2A; A e6 2020 approved

CLEAR PASS® SPRAY SUPPRESSION

• SPRAY SUPPRESSION MUDFLAPS • SPRAY SUPPRESSION MUDFLAPS • SPRAY SUPPRESSION MUDFLAPS •								
PART NO.	WIDTH	LENGTH	PART NO.	WIDTH	LENGTH	PART NO.	WIDTH	LENGTH
5403/1622	400 (15.75")	560 (22")	**5403/2422**	610 (24")	560 (22")	**5403/2448**	610 (24")	1220 (48")
5403/1822	460 (18")	560 (22")	**5403/2622**	660 (26")	560 (22")	**5403/2648**	660 (26")	1220 (48")

RUBBER MUDFLAPS

Designed to withstand cracking, fraying, abrasion, disintegration from water absorption, contamination from exhaust fumes, oil and road dirt over a wide range of ambient temperatures, at the same time they are sufficiently rigid to do a good job of controlling road dirt and spray thrown up by the road wheels.

Moulded from reinforced rubber with square tops and radiused bottom corners, strengthening ribs and fixing holes.

• RUBBER MUDFLAPS • RUBBER MUDFLAPS • RUBBER MUDFLAPS • RUBBER MUDFLAPS •								
PART NO.	WIDTH	LENGTH	PART NO.	WIDTH	LENGTH	PART NO.	WIDTH	LENGTH
2678/001	406 (16")	305 (12")	**2678/009**	560 (22")	406 (16")	**2678/224**	610 (24")	305 (12")
2678/002	457 (18")	305 (12")	**2678/010**	508 (20")	457 (18")	**2678/422**	560 (22")	356 (14")
2678/003	508 (20")	305 (12")	**2678/011**	533 (21")	457 (18")	**2678/624**	610 (24")	406 (16")
2678/004	533 (21")	305 (12")	**2678/012**	560 (22")	457 (18")	**2678/700**	508 (20")	356 (14")
2678/005	560 (22")	305 (12")	**2678/212**	305 (12")	305 (12")	**2678/815**	380 (15")	457 (18")
2678/006	457 (18")	406 (16")	**2678/214**	356 (14")	305 (12")	**2678/823**	584 (23")	457 (18")
2678/007	508 (20")	406 (16")	**2678/219**	483 (19")	305 (12")	**2678/824**	610 (24")	457 (18")
2678/008	533 (21")	406 (16")	**2678/698**	TOP=152 (6"), BOTTOM=216 (8.5"), TAPERED LENGTH=241 (9.5")				

MONOGRAMMED MUDFLAPS

a most cost effective form of advertising

- **OUR EXTENSIVE FACILITIES AND GRAPHIC EXPERIENCE ENABLES US TO REPRODUCE YOUR MESSAGE OR COMPANY LOGO FROM ANY SOURCE AND TO ITS FULL ADVANTAGE. WE MAKE SURE YOUR MESSAGE GETS ACROSS.**
- **SINGLE OR MULTI-COLOUR PRINTING**
- **ALL ARTWORK AND SCREENS ARE RETAINED TO ENABLE FASTER REPEAT ORDERS.**

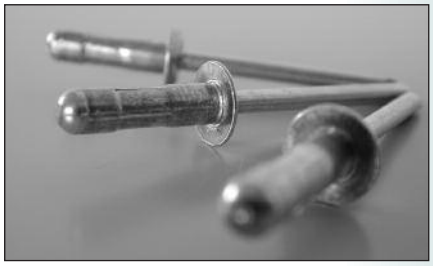

fasteners, adhesives & sealants

section h

FASTENERS, ADHESIVES & SEALANTS

AVDEL MECHANICAL FASTENERS h1-h10
- *'AVEX' BREAKSTEM RIVET h1*
- *'AVINOX' BREAKSTEM RIVET h2*
- *'SR' SEALED BREAKSTEM RIVET h2*
- *'BULBEX' BREAKSTEM RIVET h3*
- *'T-LOK' BREAKSTEM RIVET h3*
- *'HEMLOK' BREAKSTEM RIVET h4*
- *'MONOBOLT' BREAKSTEM RIVET h5*
- *'AVDELOK' LOCKBOLT h6*
- *'MAXLOK' LOCKBOLT h7*
- *'AVTAINER' LOCKBOLT h8*
- *'CAMTAINER' LOCKBOLT h9*
- *NUTSERTS h10*

AVDEL APPLICATION TOOLING h10-h13

DOW ADHESIVE SEALANTS h14-h21
- *BETAFILL - SEAM SEALANTS h15*
- *BETALINK - ADHESIVE SEALANTS h16*
- *BETAMATE - STRUCTURAL BONDING h17*
- *BETAMATE - DIRECT GLAZING h18*
- *BETAPRIME - URETHANE PRIMERS h19*
- *BETACLEAN - DEGREASE/CLEAN h20*
- *CONSUMABLES h21*
- *APPLICATION TOOLING h22-23*

ADHESIVE TAPES h24

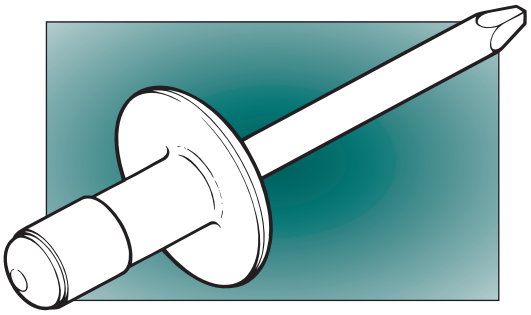

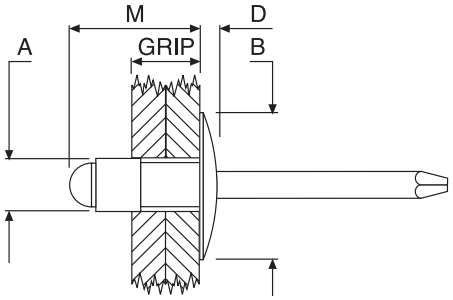

Avex

The Avex System is a versatile and cost-effective assembly method designed for use with a wide variety of materials which includes metals, plastics and wood.

Installed from one side of the workpiece the scope for applications is extensive and the range of Avex fasteners and installation equipment provides the means to achieve substantial cost savings and durable, high quality end products.

Avex is supplied as a single component fastener ready to use and is available in aluminium alloy and steel materials in a variety of lengths and diameters. To meet the many and varied demands of assembly within manufacturing industries, Avex is also available in a choice of head form:- raised, countersunk and large flange.

MULTI-GRIP FACILITY

The most significant cost-effective feature of Avex is its wide grip range. This characteristic enables every Avex fastener to join materials of varying thicknesses.

Several conventional rivets of different lengths would be required to achieve the same result. Subsequent benefits are:-

- **SUBSTANTIAL REDUCTION IN STOCK HOLDING.**
- **SIMPLIFIED RE-ORDERING PROCEDURES.**
- **REDUCED OPERATOR ERRORS AND IMPROVED EFFICIENCY.**

HOLE FILL

Avex ensures complete hole fill even in over size, irregular or misaligned holes. The result is high clamp-up, positive stem retention and high strength reliable assemblies.

PLACING SEQUENCE

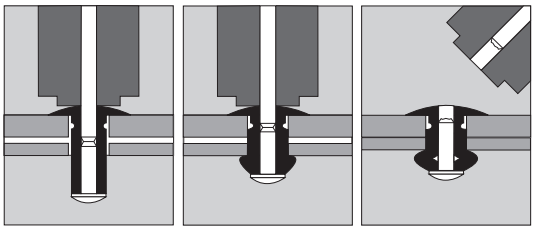

1661 SERIES

RIVET-ALUMINIUM ALLOY
STEM-CARBON STEEL, ZINC PLATED

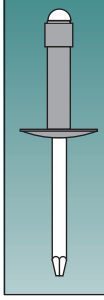

SNAP HEAD

Part No.	'A'	'B'	'D'	'M'	Grip Range	Hole Dia.
01661/0410	3.2	6.66	1.05	10.4	0.80-4.80	3.25-3.38
01661/0414	3.2	6.66	1.05	13.6	4.00-7.90	3.25-3.38
01661/0512	4.0	8.16	1.30	12.5	1.20-6.30	4.09-4.22
01661/0516	4.0	8.16	1.30	15.6	4.00-9.50	4.09-4.22
01661/0613	4.8	10.06	1.55	13.9	1.60-6.30	4.90-5.03
01661/0619	4.8	10.06	1.55	18.7	4.80-11.1	4.90-5.03
01661/0621	4.8	10.06	1.55	20.2	4.80-12.7	4.90-5.03
01661/0631	4.8	10.06	1.55	28.2	4.80-19.8	4.90-5.03

1604 SERIES

RIVET-ALUMINIUM ALLOY
STEM-CARBON STEEL, ZINC PLATED

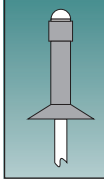

C'SUNK HEAD

Part No.	'A'	'B'	'D'	'M'	Grip Range	Hole Dia.
01604/0412	3.2	5.52	0.89	12.0	2.40-6.30	3.25-3.38
01604/0514	4.0	6.53	0.94	14.0	2.80-7.90	4.09-4.22
01604/0615	4.8	8.92	1.38	15.5	3.20-7.90	4.90-5.03
01604/0621	4.8	8.92	1.38	18.0	6.30-12.7	4.90-5.03

1641 SERIES

RIVET-ALUMINIUM ALLOY
STEM-CARBON STEEL, ZINC PLATED

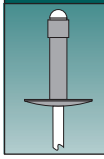

LARGE FLANGE

Part No.	'A'	'B'	'D'	'M'	Grip Range	Hole Dia.
01641/0613	4.8	16.13	1.88	13.56	1.60-6.40	4.90-5.05
01641/0621	4.8	16.13	1.88	19.66	6.40-12.7	4.90-5.05
01641/0631	4.8	16.13	1.88	27.58	12.7-19.8	4.90-5.05

1624 SERIES

RIVET-CARBON STEEL, ZINC PLATED
STEM-CARBON STEEL, ZINC PLATED

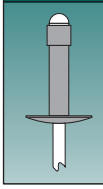

SNAP HEAD

Part No.	'A'	'B'	'D'	'M'	Grip Range	Hole Dia.
01624/0411	3.2	7.55	0.94	11.4	1.12-4.00	3.28-3.40
01624/0514	4.0	8.44	1.32	13.6	1.40-5.00	4.10-4.22
01624/0612	4.8	10.09	1.88	13.8	1.20-4.80	4.90-5.03
01624/0616	4.8	10.09	1.88	16.2	4.00-6.30	4.90-5.03

All dimensions in mm and are nominal.
Information above is issued as a guidance only.

albert Jagger limited

Avdel: Sealed Rivets & Avinox

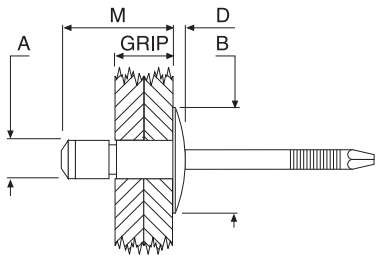

BE 61 SERIES

RIVET-STAINLESS STEEL
STEM-STAINLESS STEEL

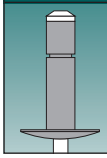

SNAP HEAD

Part No.	'A'	'B'	'D'	'M'	Grip Range	Hole Dia.
BE61/0611	4.8	9.6	1.5	12.8	1.5-3.5	4.9-5.1
BE61/0614	4.8	9.6	1.5	15.4	3.5-6.0	4.9-5.1
BE61/0618	4.8	9.6	1.5	18.4	6.0-8.5	4.9-5.1

All dimensions in mm, and are nominal.
Information above is issued as a guidance only.

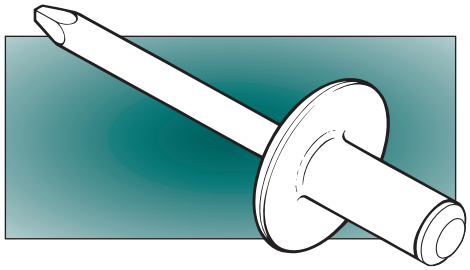

Avinox

Avinox is a variation of the Avex rivet but manufactured from stainless steel. It is particularly recommended for use in applications exposed to highly corrosive environments or demanding climatic conditions. These can include ventilation, hospitals, catering, or off-shore industries.

PLACING SEQUENCE

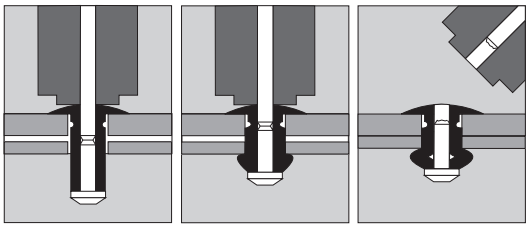

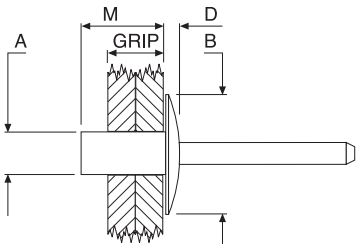

SR01 SERIES

RIVET-ALUMINIUM ALLOY
STEM-CARBON STEEL, PHOSPHATED

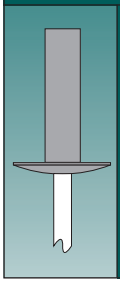

RAISED HEAD

Part No.	'A'	'B'	'D'	'M'	Grip Range	Hole Dia.
SR01/3212	3.2	6.0	0.9	12.5	6.5-8.0	3.3-3.4
SR01/4011	4.0	8.0	1.3	11.0	5.0-6.5	4.1-4.2
SR01/4080	4.0	8.0	1.3	8.0	0.0-3.5	4.1-4.2
SR01/4811	4.8	9.5	1.5	11.0	5.0-6.5	4.9-5.0
SR01/4812	4.8	9.5	1.5	12.5	6.5-8.0	4.9-5.0
SR01/4814	4.8	9.5	1.5	14.0	8.0-9.5	4.9-5.0
SR01/4818	4.8	9.5	1.5	16.0	9.5-11.0	4.9-5.0

All dimensions in mm, and are nominal.
Information above is issued as a guidance only.
Other sizes available on request.

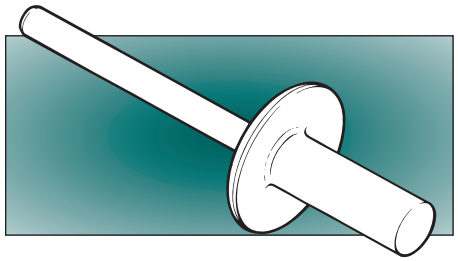

Sealed rivet

A completely sealed rivet which is specifically designed for applications where a fastener has to be either water or gas-tight. The protruding side of the rivet is completely sealed so that there is no possibility of the stem falling out. As there is no blind side exposure, corrosion resistance is greatly improved.

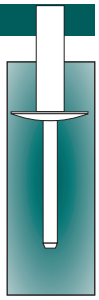

PLACING SEQUENCE

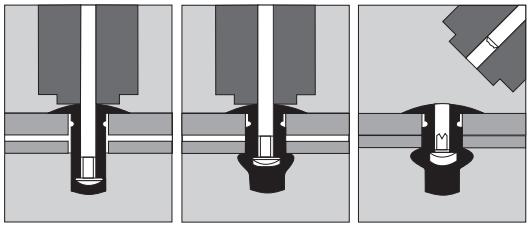

Avdel: T-Lok & Bulbex

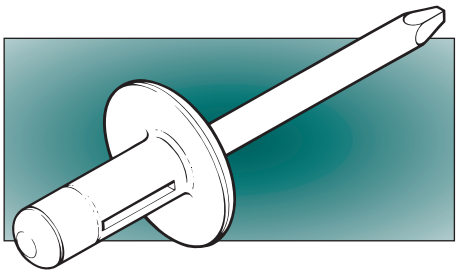

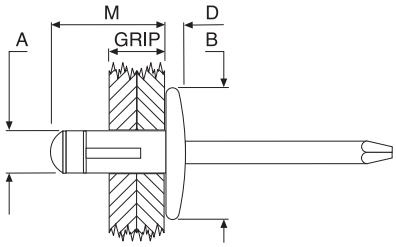

Bulbex

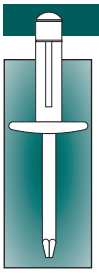

Bulbex is an all aluminium corrosion resistant fastener for use with soft, brittle, and thin materials. During installation the fastener collapses out wards forming three large tail segments, which spread the clamp-load over a large surface area and at the same time providing grip, and strength.

PLACING SEQUENCE

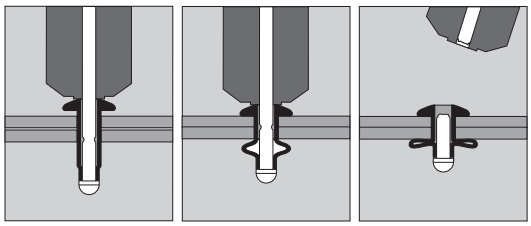

BF01 SERIES — RIVET-ALUMINIUM ALLOY, STEM-ALUMINIUM ALLOY

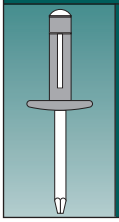

Part No.	'A'	'B'	'D'	'M'	Grip Range	Hole Dia.
BF01/0523	4.0	7.9	1.4	21.2	1.0-7.0	4.2-4.5
BF01/0619	4.8	9.8	1.91	18.1	1.0-4.0	5.0-5.25
BF01/0625	4.8	9.8	1.91	23.3	1.0-9.0	5.0-5.25
BF01/0630	4.8	9.8	1.91	27.1	4.0-12.0	5.0-5.25

All dimensions in mm, and are nominal.
Information above is issued as a guidance only.

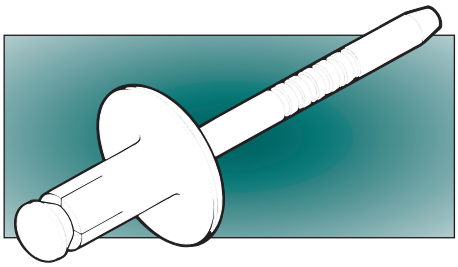

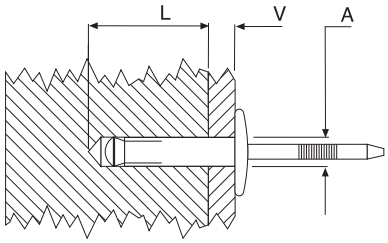

T~lok

The T-Lok fastener produces a positive, efficient and cost effective method of assembly for applications involving joining metal to wood, GRP, plastics, rubber and glass-fibre materials. Its major feature is its highly effective resistance to pull-out loads which is provided by the large bear ing area formed during installation.

PLACING SEQUENCE

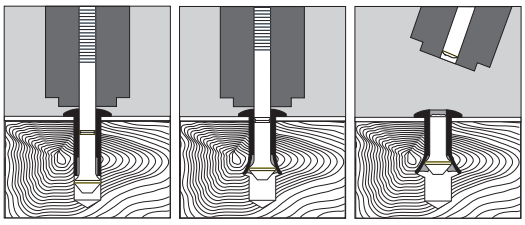

BM01 SERIES — RIVET-CARBON STEEL, ZINC PLATED, STEM-CARBON STEEL, ZINC PLATED

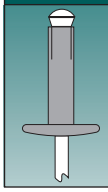

SNAP HEAD

Part No.	'A'	'V' Max	'V' Min	'L' Min 'V' Max	'L' Min 'V' Min	Hole Dia.
BM01/0512	4.3	1.27	0.25	9.1	10.2	4.30-4.42
BM01/0614	4.8	3.05	0.25	9.2	12.0	4.76-4.89
BM01/0620	4.8	7.62	0.25	9.3	16.7	4.76-4.89

All dimensions in mm, and are nominal.
Information above is issued as a guidance only.

Avdel: Hemlok

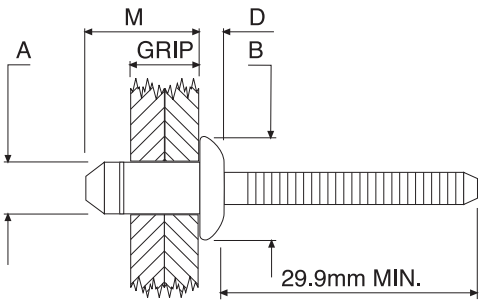

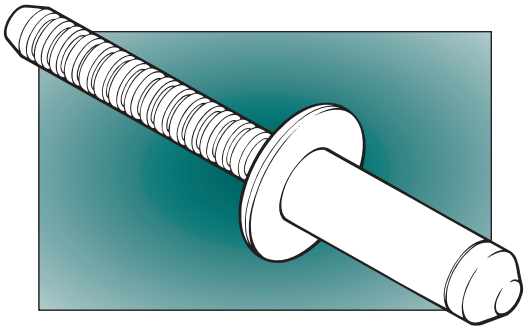

2221 SERIES

BODY-CARBON STEEL, ZINC PLATED
STEM-CARBON STEEL, ZINC PLATED

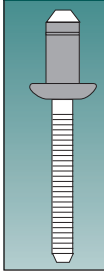

PROTRUDING HEAD

Part No.	'A'	'B'	'D'	'M'	Grip Range	Hole Dia.
02221/0812	6.35	13.08	2.54	13.1	1.5-3.5	6.7-6.9
02221/0813	6.35	13.08	2.54	14.3	2.8-4.8	6.7-6.9
02221/0814	6.35	13.08	2.54	15.0	3.35-5.35	6.7-6.9
02221/0815	6.35	13.08	2.54	16.4	4.8-6.8	6.7-6.9
02221/0817	6.35	13.08	2.54	18.3	6.8-8.8	6.7-6.9
02221/0819	6.35	13.08	2.54	20.3	8.8-10.8	6.7-6.9
02221/0821	6.35	13.08	2.54	22.3	10.8-12.8	6.7-6.9

All dimensions in mm, and are nominal.
Information above is issued as a guidance only.

HIGH SHEAR STRENGTH

The salient feature of Hemlok is the extremely high stem retention achieved by positive engagement between the stem and shell.

Industries with potential for Hemlok include the following:

- **AUTOMOTIVE**
- **AGRICULTURAL EQUIPMENT**
- **BUS, COACH AND RAILWAY STOCK**
- **COMMERCIAL VEHICLE**
- **ELECTRICAL ENGINEERING**

The cross-section diagram shows an installed Hemlok fastener in the thin back sheet condition.

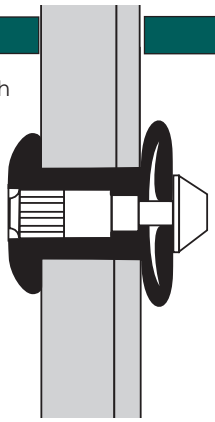

Hemlok

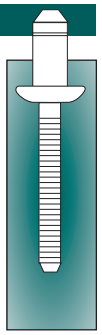

Hemlok fastening and Assembly Systems are based on a unique, high performance fastener which is designed to meet the demanding standards within manufacturing industries. Many industries have adopted thin gauge materials for economic assembly, but still have a requirement for high strength joints. Automotive, electrical, and Domestic Appliance manufacturers are examples of such industries which can achieve significant, cost-effective benefits using Hemlok systems.

Hemlok is a unique Avdel product which comprises a steel or aluminium stem and shell. Steel components are zinc plated and gold passivated to ensure good corrosion resistance. The fastener is supplied as a single component ready for immediate use, and is available in 6.4mm (1/4") diameter in seven lengths. It is installed from one side of the workpiece, and is designed with a chamfer at both ends of the stem.
This facilitates easy insertion into the placing tip of the installation equipment, and into the hole in the work-piece. The installed fastener breaks flush with or below the surface of the low profile Hemlok head,leaving a clean finish and appearance. Hemlok provides high strength and good clamp-up, and the well formed fastener tail achieves this without deforming thin sheet material.

PLACING SEQUENCE

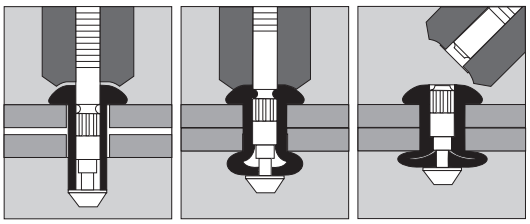

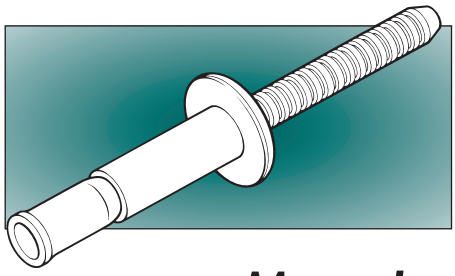

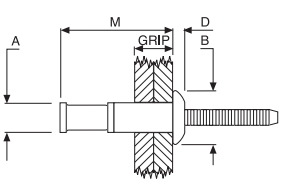

BEFORE PLACING
NO REAR OBSTRUCTION

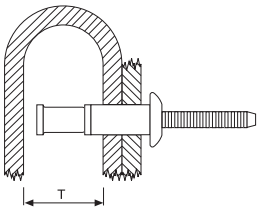

BEFORE PLACING
LIMITED REAR CLEARANCE

Monobolt

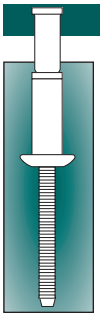

Monobolt is a high performance flush break fastener designed to build-in strength, security, quality and cost saving benefits for the most demanding assembly requirement.

Fast and simple to install, Monobolt is ideal for original structural assembly and to replace conventional fastening methods, particularly when access to the workpiece is difficult. For applications where speed, high strength joints, vibration and moisture resistant characteristics are essential, Monobolt is unrivalled.

Monobolt is a precision engineered two-part component, developed from a highly successful product designed to meet stringent aerospace specifications and standards.
The fastener consists of a body and a stem and is supplied to the user as a one-piece assembly.
A sealing land on the Monobolt stem provides exceptional resistance to moisture, an essential requirement for many applications.
The vibration resistant properties of Monobolt have been tested and verified by independent laboratory tests conducted in accordance with a U.S. Aerospace Specification (NAS 1900).
Monobolt is available in Aluminium Alloy, Carbon Steel and Stainless Steel, in diameters of 3/16" (4.8mm) and 1/4" (6.35mm).
Universal and Countersunk head configurations are also available.

VERSATILITY

- **CHOICE OF ALUMINIUM ALLOY, CARBON STEEL AND STAINLESS STEEL.**
- **WIDE GRIP RANGE FROM .064" (1.63MM) TO .625" (15.8MM).**
- **MAY BE USED ANYWHERE ON THE ASSEMBLY LINE.**
- **DESIGN FLEXIBILITY PROVIDED BY VIBRATION AND MOISTURE RESISTANT CHARACTERISTICS.**
- **STEM AND BODY ARE PLATED WITH ZINC TO WITHSTAND RUST AND CORROSION.**
- **CHOICE OF PNEUMATIC PLACING EQUIPMENT AND HAND TOOLS.**

PLACING SEQUENCE

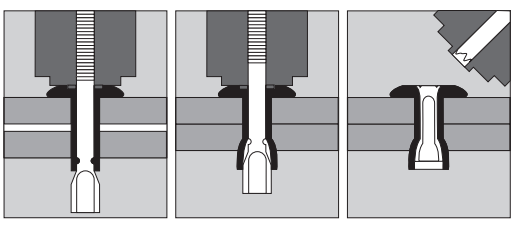

2711 SERIES — BODY-STAINLESS STEEL STEM-STAINLESS STEEL

PROTRUDING HEAD

Part No.	'A'	'B'	'D'	'M'	'T'	Hole Ø	Grip Range
02711/0613	4.76	9.78	1.78	18.19	10.41	5.0	1.63-6.86
02711/0617	4.76	9.78	1.78	24.44	13.46	5.0	1.63-11.10
02711/0817	6.35	13.1	2.54	23.70	12.19	6.8	2.03-9.53

2771 SERIES — BODY-CARBON STEEL STEM-CARBON STEEL

PROTRUDING HEAD

Part No.	'A'	'B'	'D'	'M'	'T'	Hole Ø	Grip Range
02771/0613	4.76	9.78	1.78	18.19	10.41	5.0	1.63-6.86
02771/0617	4.76	9.78	1.78	24.44	13.46	5.0	1.63-11.10
02771/0817	6.35	13.1	2.54	23.70	12.19	6.8	2.03-9.53
02771/0824	6.35	13.1	2.54	32.92	16.38	6.8	2.03-15.87

02761, 100⁰ COUNTERSUNK HEAD AVAILABLE ON REQUEST

2774 SERIES — BODY-ALUMINIUM ALLOY STEM-ALUMINIUM ALLOY

PROTRUDING HEAD

Part No.	'A'	'B'	'D'	'M'	'T'	Hole Ø	Grip Range
02774/0613	4.76	9.78	1.78	18.31	10.41	5.0	1.63-6.86
02774/0617	4.76	9.78	1.78	24.03	12.95	5.0	1.63-11.10
02774/0817	6.35	13.1	2.54	24.51	12.95	6.8	2.03-9.53
02774/0824	6.35	13.1	2.54	34.70	18.03	6.8	2.03-15.87

02764, 100⁰ COUNTERSUNK HEAD AVAILABLE ON REQUEST

All dimensions in mm, and are nominal.
Information above is issued as a guidance only.

VISIBLE LOCK

A major feature of the Monobolt construction is the unique visible locking element. In addition to providing positive stem retention, high strength performance and correct locking, this feature allows easy and visible inspection after placement. Avdel developed and patented the unique Monobolt visible lock to meet the needs of industry.

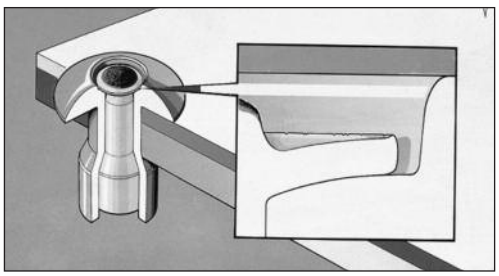

Avdel: Avdelok

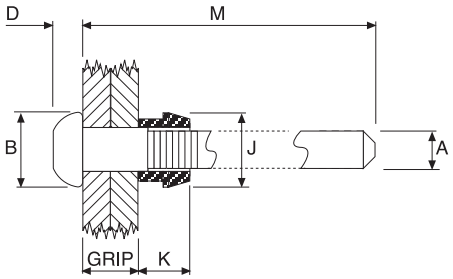

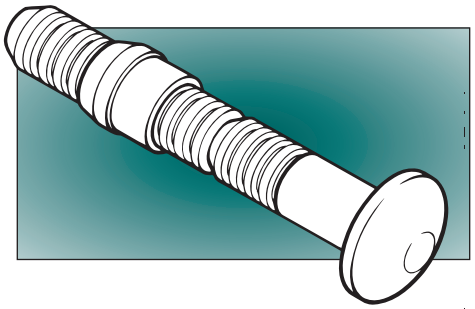

2611 SERIES

MATERIAL-CARBON STEEL
FINISH-ZINC PLATED

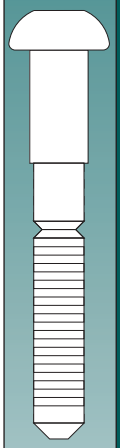

BRAZIER HEAD

Part No.	'A'	'B'	'D'	'M'	Grip Range	Hole Dia.
02611/0601	4.8	9.5	3.35	31.24	0.79-2.39	5.0
02611/70602	4.8	9.5	3.35	33.02	2.39-3.96	5.0
02611/70603	4.8	9.5	3.35	34.54	3.96-5.56	5.0
02611/70604	4.8	9.5	3.35	36.07	5.56-7.14	5.0
02611/70605	4.8	9.5	3.35	37.59	7.14-8.74	5.0
02611/70606	4.8	9.5	3.35	39.37	8.74-10.31	5.0
02611/70607	4.8	9.5	3.35	40.89	10.31-11.91	5.0
02611/70802	6.4	12.7	4.09	36.32	2.39-3.96	6.6
02611/70803	6.4	12.7	4.09	38.1	3.96-5.56	6.6
02611/70804	6.4	12.7	4.09	39.62	5.56-7.14	6.6
02611/70805	6.4	12.7	4.09	41.15	7.14-8.74	6.6
02611/70806	6.4	12.7	4.09	42.67	8.74-10.31	6.6
02611/70807	6.4	12.7	4.09	44.45	10.31-11.91	6.6
02611/70808	6.4	12.7	4.09	45.97	11.91-13.49	6.6
02611/70809	6.4	12.7	4.09	47.5	13.49-15.09	6.6
02611/70810	6.4	12.7	4.09	49.02	15.09-16.66	6.6
02611/70813	6.4	12.7	4.09	53.85	19.84-21.41	6.6
02611/71006	7.9	15.9	5.44	48.26	8.33-10.72	8.2
02611/71007	7.9	15.9	5.44	50.29	10.72-13.11	8.2
02611/71009	7.9	15.9	5.44	52.83	13.11-15.47	8.2

2612 SERIES

MATERIAL-CARBON STEEL
FINISH-ZINC PLATED

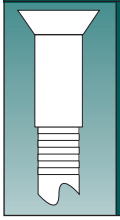

C'SUNK HEAD

Part No.	'A'	'B'	'D'	'M'	Grip Range	Hole Dia.
02612/70603	4.8	8.6	2.16	34.54	3.96-5.56	5.0
02612/70604	4.8	8.6	2.16	36.07	5.56-7.14	5.0
02612/70606	4.8	8.6	2.16	39.37	8.74-10.31	5.0
02612/70804	6.4	11.5	2.90	39.62	5.56-7.14	6.6
02612/70805	6.4	11.5	2.90	41.15	7.14-8.74	6.6

2662 & 2682 SERIES

MATERIAL-CARBON STEEL
FINISH-ZINC PLATED

COLLARS

Part No.	TYPE	'A'	'J'	'K
02662/70600	FULL	4.8	7.85	6.35
02682/70600	HALF	4.8	7.85	3.81
02662/70800	FULL	6.4	10.31	8.13
02682/70800	HALF	6.4	10.31	5.84
02662/71000	FULL	7.9	12.50	9.65
02682/71000	HALF	7.9	12.50	6.10

All dimensions in mm, and are nominal.
Information above is issued as a guidance only.
Other sizes available on request.

Avdelok

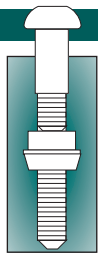

Avdelok is a high strength fastener, designed for a variety of applications which require fast and cost effective assembly methods.

Speed of placing, vibration resistance and high strength characteristics are Avdelok's major features. Low cost, reliable assembly, resulting in durable, high quality end products, are the major benefits.

The availability of Avdelok in a variety of materials, head forms and diameters, together with an extensive range of installation equipment, provides significant scope for numerous applications throughout the manufacturing industry.

In particular, Avdelok eliminates the problems associated with loose nuts, lock nuts, bolts and solid rivets, and increases the speed of assembly substantially.

Fast, high quality Avdel power tools control the installation of Avdelok. No special operator skill is required.

FASTENER PROFILE

Avdelok consists of a grooved pin and a separate collar, manufactured in either self-colour or zinc-plated steel, stainless steel, or aluminium.

Diameters range from 3/16" (4.76mm) to 3/8" (9.35mm) in a variety of grip lengths. A choice of brazier, countersunk and low profile head forms increase the versatility of the Avdelok fastener.

Collar variations are available in full, and half sizes to meet the requirements of specific applications.

- **AUTOMOTIVE**
- **COMMERCIAL VEHICLES**
- **DOMESTIC APPLIANCES**
- **RAILWAY STOCK**

PLACING SEQUENCE

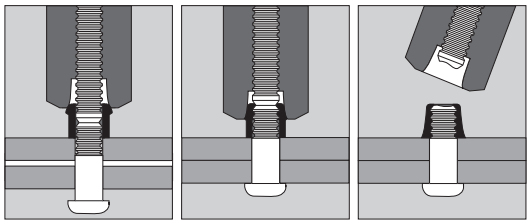

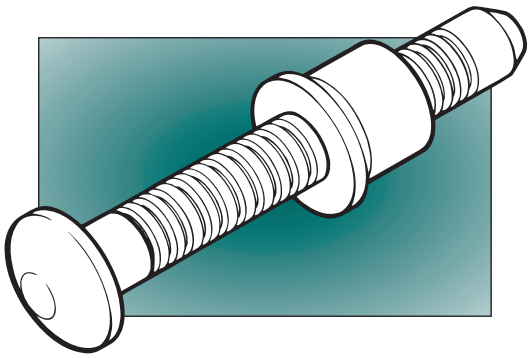

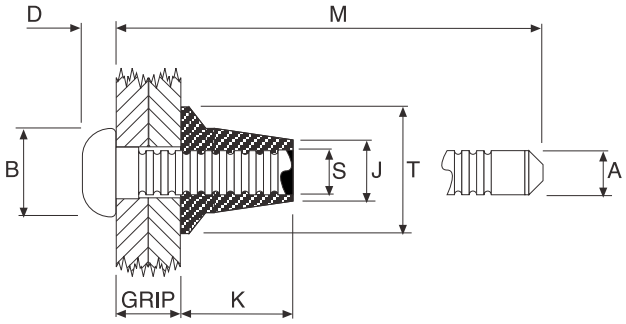

Maxlok

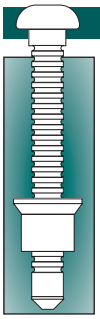

Maxlok- Avdel's versatile fastener with the extensive grip range, now provides considerable scope and flexibility for many assembly techniques. Ideal for applications where material thicknesses vary or production programmes are subject to change, two lengths of Maxlok cover a grip range from, 0.062" (1.6mm) to 1.25" (31.7mm).

This versatility combined with considerably reduced stockholding provides significant cost effective benefits over bolt/nut, solid rivet and other traditional fastening methods.

High quality Avdel tooling controls the rapid installation of Maxlok, which breaks-off flush within the specified grip range. During installation the tool action swages the collar material into the circular locking grooves on the pin, resulting in accurate and reliable assembly every time!
Maxlok consists of a zinc-plated, steel pin and a separate collar, the pin having common grip and break grooves along its length, to allow flush break-off during placing.

PLACING SEQUENCE

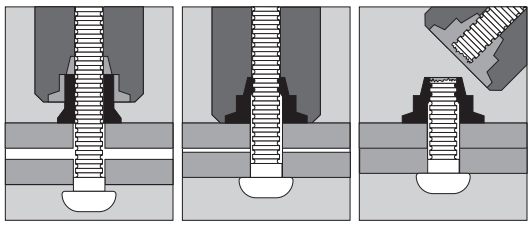

1901 SERIES

MATERIAL-CARBON STEEL
FINISH-ZINC PLATED

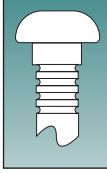

BRAZIER HEAD

Part No.	'A'	'B'	'D'	'M'	Grip Range	Hole Dia.
01901/70610	4.8	10.0	3.2	48.0	1.6-15.9	5.16
01901/70620	4.8	10.0	3.2	63.8	7.9-31.7	5.16
01901/70810	6.35	13.3	3.9	52.8	1.6-15.9	6.75
01901/70820	6.35	13.3	3.9	68.7	7.9-31.7	6.75

1903 SERIES

MATERIAL-CARBON STEEL
FINISH-ZINC PLATED

MUSHROOM

Part No.	'A'	'B'	'D'	'M'	Grip Range	Hole Dia.
01903/70610	4.8	12.45	2.6	47.9	1.6-15.9	5.16
01903/70810	6.35	16.66	3.0	52.8	1.6-15.9	6.75
01903/70820	6.35	16.66	3.0	68.7	7.9-31.7	6.75

1981 SERIES

MATERIAL-CARBON STEEL
FINISH-ZINC PLATED

COLLARS

Part No.	'J'	'K'	'S'	'T'
01981/70600	7.77-7.85	7.21-7.47	4.8	9.65-10.03
01981/70800	10.23-10.31	9.78-10.03	6.35	12.7-13.08

All dimensions in mm, and are nominal.
Other sizes & types available on request.
Information above is issued as a guidance only.

albert Jagger limited

Avdel: Avtainer

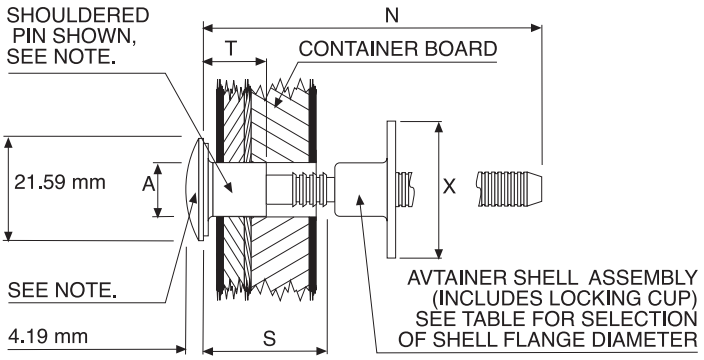

2311 SERIES

PIN-CARBON STEEL, ZINC PLATED
SHELL-CARBON STEEL, ZINC PLATED

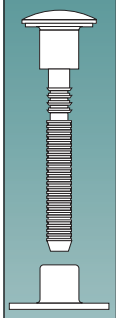

I AVTAINER I AVTAINER I AVTAINER I AVTAINER I

Part No.	'A'	'N'	'S'	'T'	Grip Range
02311/1209 [1]	10.0	55.9	14.3	-	12.7-15.87
02311/1210 [1]	10.0	56.9	15.9	-	14.27-17.45
02311/1211	10.0	58.4	17.5	4.6	15.87-19.05
02311/1212	10.0	60.2	19.0	6.1	17.45-20.62
02311/1213	10.0	61.7	20.6	7.9	19.05-22.22
02311/1214	10.0	63.2	22.2	9.4	20.62-23.80
02311/1215	10.0	64.8	23.8	10.9	22.22-25.40
02311/1216	10.0	66.5	25.4	12.5	23.80-26.97
02311/1217	10.0	75.9	27.0	14.2	25.40-28.57
02311/1218	10.0	75.9	28.6	14.2	26.97-30.15
02311/1219	10.0	75.9	30.2	14.2	28.57-31.75
02311/1220	10.0	75.9	31.8	14.2	30.15-33.32
02311/1221	10.0	75.9	33.3	14.2	31.75-34.92
02311/1222	10.0	75.9	34.9	14.2	33.32-36.50
02321/1200	SHELL DIMENSION 'X'				32
02325/1200					22.9
RECOMMENDED HOLE DIAMETER = 10.5					

Note 1: *Avtainers 02311-1209 & 1210 do not have shoulders.*

Note 2: *Under no circumstances should head of pin be placed directly against container board, only against metal surfaces.*

All dimensions in mm, and are nominal.

Information above is issued as a guidance only.

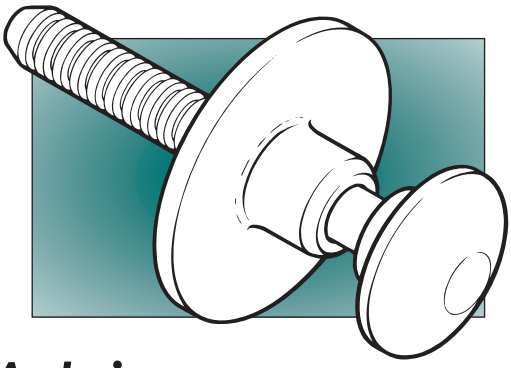

Avtainer

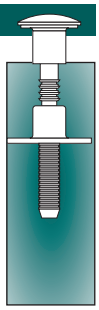

The joining of composite panels of plywood and glass reinforced plastic to metal framing requires a fastener with the ability to join firmly, but, without cracking or pulling the bolt right through the composition.

The efficiency of the Avtainer system is achieved with the combination of the high quality, two - part, steel fastener, and an air powered placing tool.

It also ensures that efficient and effective fastening is performed whether the operators are skilled or unskilled.

BENEFITS

The Avdel Avtainer System is designed to cope with the above requirements and to give the following benefits:

- **HIGH CLAMP UP**
- **ULTIMATE TENSILE STRENGTH EQUAL TO THE CRUSHING LOAD OF THE GRP OR PLYWOOD BOARD**
- **TO SEAL AGAINST THE INGRESS OF MOISTURE**
- **COVERS VARYING HOLE TOLERANCES**
- **WIDE GRIP RANGE**
- **MINIMUM HEAD PROTRUSION**
- **MINIMUM TAIL PROTRUSION**
- **INCREASED USABLE CUBIC CAPACITY**
- **TIR APPROVED - GROUP 1**
- **LOW INSTALLED COST**

PLACING SEQUENCE

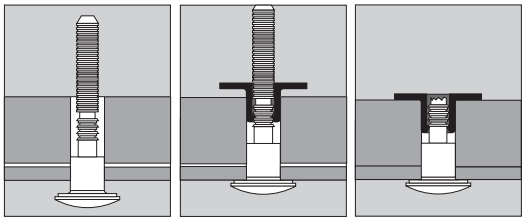

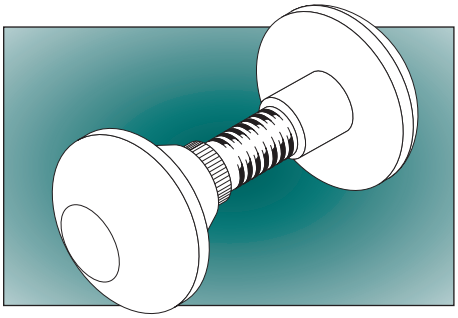

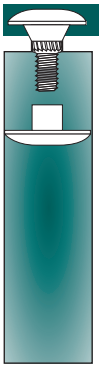

Camtainer

This high strength, two-part steel fastening system is designed for joining composite panels to metal without cracking or pulling through of the material.

A moulded underhead seal prevents moisture ingress and corrosion, whilst the 'Camgrip ®' adhesive patch secures the fastener in place, preventing loosening caused by shock or vibration. The Camtainer's unique bolt and TORX ® nut system enables the fastener to be removed and reinstalled (3 times max.), making it ideal for use in both OEM and repair applications

BENEFITS

The Avdel Camtainer System is designed to give the following features and benefits:

- **EXTENSIVE GRIP RANGE**
  fastens material thicknesses from 12 mm to 80 mm
- **INDUSTRY STANDARD TOOLING**
  reduces maintenance & replacement costs
- **CAMGRIP® ADHESIVE PATCH**
  increased vibration resistance & fastener security
- **TORX® DRIVE SYSTEM**
  efficient torque transfer to fastener & increased tool life
- **LOW PROFILE HEAD & NUT**
  increases internal space & provides tamper resistance
- **UNDERHEAD SEAL**
  seals out moisture & provides corrosion resistance
- **UNDERHEAD KNURL**
  resists rotation on installation, assisting single operator application
- **TIR APPROVED.**

PLACING SEQUENCE

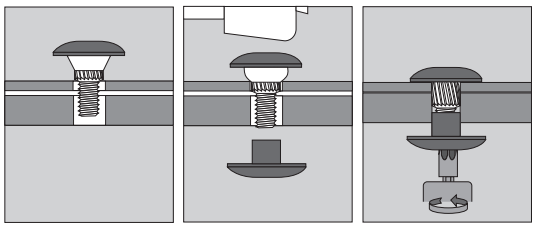

NB. *Use only a soft-faced hammer.*
Torque settings: 8 mm camtainer - between 16.9 & 19.77 Nm.

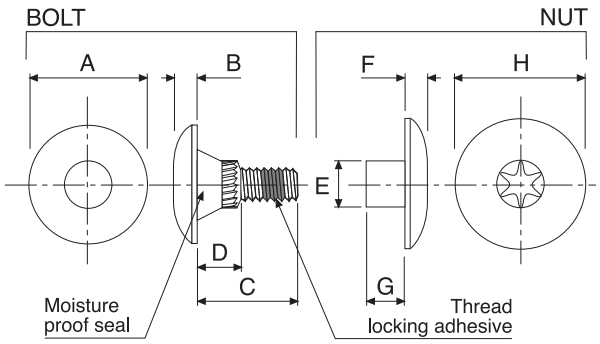

883 SERIES

BOLT: ZINC PLATED STEEL
SEAL: KRATON G

CAMTAINER

Part No.	'A'	'B'	'C'	'D'
01883/80500	23.11	5.08	19.05	5.59
01883/82920	23.11	5.08	25.40	5.59
01883/83000	23.11	5.08	31.75	5.59

890 SERIES

NUT: ZINC PLATED STEEL

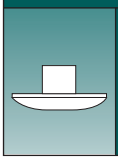

CAMTAINER

Part No.	'E'	'F'	'G'	'H'
01890/59000	9.91	4.19	9.52	25.65
01890/60008	9.91	4.19	12.70	25.65
01890/60050	9.91	4.19	15.87	25.65

GRIP RANGE			
NUT	BOLT		
	01883/80500	01883/82920	01883/83000
01890/59000	17.83 - 19.69	18.67 - 28.58	31.12 - 33.40
01890/60008	19.94 - 22.86	19.76 - 31.75	33.27 - 36.83
01890/60050	22.23 - 25.40	22.35 - 34.42	35.94 - 40.01

All dimensions in mm, and are nominal.
Other sizes & types available on request.
Information above is issued as a guidance only.

albert Jagger limited

Avdel: Nutserts & Tooling

The extensive range of Avdel Threaded Inserts provides the user with wide capabilities in manufacturing. Designed to be placed into thin sheet materials, Avdel Threaded Inserts are made from carbon steel and zinc plated with a passivated finish. Each insert features a deep and vibration resistant load-bearing thread. Once installed, the thread is immediately ready to accept screw or bolt.
A number of features are common to each insert within the range.
These include:-

- Only pre-drilled or punched holes required.
- Fast one-sided application.
- Suitable for sheet materials of varying thicknesses and in square or round tubing.
- Wide grip range.
- Hard steel load-bearing thread.
- Thread cleared on placing.
- Ready to accept screw or bolt.
- Ideal for use in painted surfaces.
- Avoids re-work and wastage.
- Steel, stainless steel, and zinc passivated.
- Wide choice of inserts.
- Choice of high speed placing equipment.
- Closed end versions are available for applications with particular requirements.

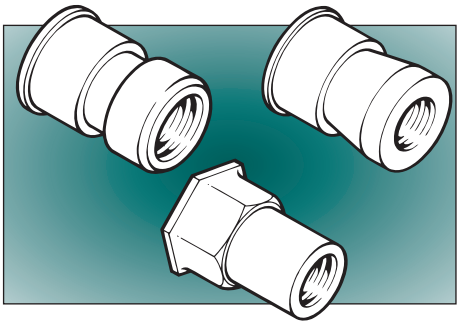

Nutserts

PLACING SEQUENCE

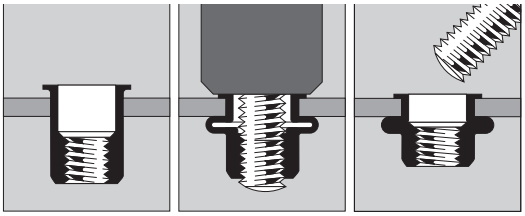

074200/12000	HYDRO PNEUMATIC THREADED INSERT TOOL	
Specifications;		
	Weight	2.2kg (4.4lb)
	Pull force (@ 5.5 bar)	19.1kN (4300lbf)
	Stroke (min)	7.0mm (0.276")
	Motor speed (spin on/spin off)	2000 rpm
Placing capability;		
	All steel threaded inserts	up to M10
	All stainless steel threaded inserts	up to M10
	All aluminium threaded inserts	up to M10
NB:		
	• A comprehensive range of inserts are available, please call for details.	

07486/09601	NUTSERT HAND TOOL KIT
	Supplied with nose tips ranging from M3 to M6
07486/09602	NUTSERT HAND TOOL KIT
	Supplied with nose tips ranging from M4 to M8

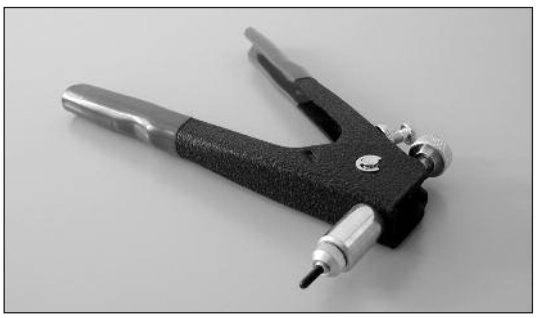

nGenesis® Power Tool Range

High speed, cost effective assembly is achieved with the extensive range of Avdel hydro pneumatic power tools. There is a choice of tool to meet every assembly requirement. One tool may install several types of fastener, simply by changing the nose equipment. Where access is difficult or awkward, special nose equipment is available. A common feature with all of the equipment is the ability to bring the tools to the work station or assembly line. No special operator training is required, as all the skill is in the tool. In addition a variety of hand tools are available if required. Our Romsey branch is an ***officially appointed tool repair service centre for Avdel UK Limited*** and fully trained personnel are always available to offer advice on the wide range of tooling available.

Features:

- *Lightweight tool*
- *Toughened plastic body & heavy duty rubber base*
- *Quick release nose assembly & stem collector*
- *Vaccum air supply shut-off on trigger*
- *Enhanced tool life*
- *Soft touch rubber grip on handle*

Benefits:

- *Reduced operator fatigue*
- *Rapid placement speed*
- *Robust tool*
- *Reduced setting times & change of equipment*
- *Minimized air consuption*
- *Reduced time to empty stem collector*
- *Place a wide range of fasteners*
- *Ergonomic design*

***NOTE** - Nose pieces are **NOT SUPPLIED** as standard with each tool due to the wide variety available. It is advisable to seek advice by contacting our Romesy branch on 01794 525870 with specific application details.*

Power Tool Placing Matrix

BRAND	MATERIAL	nG1	nG2	nG3	nG4	722
Avex®	Aluminium Alloy	3.2 - 4.0	3.2 - 4.8	3.2 - 6.4	4.8 - 6.4	-
Avex®	Carbon Steel	-	4.0 - 4.8	4.0 - 4.8	4.8	-
Avex® SR	Aluminium Alloy	3.2 - 4.0	3.2 - 4.0	3.2 - 6.4	4.8 - 6.4	-
Avinox®	Stainless Steel	3.2	3.2 - 4.8	3.2 - 4.8	4.8	-
Bulbex®	Aluminium Alloy	4.0	4.0 - 4.8	4.0 - 4.8	4.8	-
T-Lok®	Carbon Steel	4.3	4.3 - 4.8	4.3 - 4.8	4.3 - 4.8	-
Hemlok®	Carbon Steel	-	-	-	6.4	-
Monobolt®	Aluminium Alloy	4.8 - 6.4	4.8	4.8 - 6.4	-	-
Monobolt®	Carbon Steel	4.8 - 6.4	4.8	4.8 - 6.4	-	9.6
Monobolt®	Stainless Steel	4.8 - 6.4	4.8	4.8 - 6.4	-	9.6
Avdelok®	Carbon Steel	-	-	-	-	4.8 - 9.6
Maxlok®	Carbon Steel	-	-	-	-	4.8 - 6.4
Avtainer®	Carbon Steel	-	-	-	10.0	-

All sizes are in millimetres.
NB: All tools shown are capable of placing multiple products due to the wide variety & flexiblity of the nose equipment.
It is advisable to seek advice by contacting our Romesy branch on 01794 525870 with specific application details.

Avdel: Tooling

071203/02000 nGenesis® nG1 HYDRO PNEUMATIC TOOL	
Specifications;	
Weight (no nose equip)	1.5kg (3.31lb)
Weight (with nose equip)	1.7kg (3.75lb)
Pull force (@ 5.5 bar)	6.0kN (1350lbf)
Stroke (min)	14mm (0.55")
Cycle time (aprox.)	0.9 sec.
Air supply pressure	5 - 7 bar (80 - 100psi)
Free flow volume @ 5 bar	1.2 litres
Noise level	<75dB(A)
Vibration	<2.5m/s^2
Placing capability;	
Aluminium breakstem	up to Ø4.8mm (3/16")
Steel breakstem	up to Ø4.0mm (5/32")

071213/02000 nGenesis® nG2 HYDRO PNEUMATIC TOOL	
Specifications;	
Weight (no nose equip)	1.98kg (4.371lb)
Weight (with nose equip)	2.12kg (4.67lb)
Pull force (@ 5.5 bar)	9.34kN (2100lbf)
Stroke (min)	17mm (0.67")
Cycle time (aprox.)	0.8 sec.
Air supply pressure	5 - 7 bar (80 - 100psi)
Free flow volume @ 5 bar	2.1 litres
Noise level	<75dB(A)
Vibration	<2.5m/s^2
Placing capability;	
Aluminium breakstem	up to Ø4.8mm (3/16")

071223/02000 nGenesis® nG3 HYDRO PNEUMATIC TOOL	
Specifications;	
Weight (no nose equip)	2.22kg (4.891lb)
Weight (with nose equip)	2.30kg (5.07lb)
Pull force (@ 5.5 bar)	12.9kN (2900lbf)
Stroke (min)	26mm (1.02")
Cycle time (aprox.)	1.2 sec.
Air supply pressure	5 - 7 bar (80 - 100psi)
Free flow volume @ 5 bar	4.3 litres
Noise level	<75dB(A)
Vibration	<2.5m/s^2
Placing capability;	
All breakstem (excl Hemlok®)	up to Ø6.4mm (1/4")

071234/02000 nGenesis® nG4 HYDRO PNEUMATIC TOOL	
Specifications;	
Weight (no nose equip)	2.28kg (5.03lb)
Weight (with nose equip)	2.36kg (5.20lb)
Pull force (@ 5.5 bar)	18.68kN (4200lbf)
Stroke (min)	17mm (0.67")
Cycle time (aprox.)	1.2 sec.
Air supply pressure	5 - 7 bar (80 - 100psi)
Free flow volume @ 5 bar	4.3 litres
Noise level	<75dB(A)
Vibration	<2.5m/s^2
Placing capability;	
All breakstem (excl Monobolt®)	up to Ø6.4mm (1/4")
Avtainer® lockbolts	up to Ø9.5mm (3/8")
Avdelok® lockbolts	up to Ø4.8mm (3/16")
Maxlok® lockbolts	up to Ø6.4mm (1/4")
Hemlok® structural rivets	up to Ø6.4mm (1/4")

07220/00100	HEAVY DUTY HYDRO PNEUMATIC TOOL	
Specifications;		
	Weight (no nose equip)	5.0kg (11lb)
	Pull force (@ 5.5 bar)	26.7kN (6000lbf)
	Stroke (min)	19mm (0.75")
	Cycle time (aprox.)	3.0 sec.
	Air supply pressure	5 - 7 bar (80 - 100psi)
	Free flow volume @ 5 bar	14.6 litres
	Noise level	<75dB(A)
Placing capability;		
	Avdelok® structural lockbolts	up to Ø9.6mm (3/8")
	Steel Monobolts®	up to Ø9.6mm (3/8")

NB:

- **Preferred installation tool for Monobolt® & Avdelok®**
- **Heavy duty cast aluminium body**

07540/0002	Long Handled Hand Tool	
Placing capability;		
	Avex® breakstem fasteners	all sizes
	Avex® SR breakstem fasteners	all sizes
	Bulbex® breakstem fasteners	all sizes
	Avinox® breakstem fasteners	all sizes
	T-Lok® breakstem fasteners	all sizes
	Monobolt® breakstem fasteners	up to Ø6.35 (1/4")
	Hemlok® breakstem fasteners	up to Ø6.35 (1/4")

albert Jagger limited

Dow: Adhesive Sealants

" partners in progress producing customised solutions for the bus, truck & rail industries "

Dow Automotive was formed as a business group of the Dow Chemical Company in 1988, and in 1999 became Dow's first industry-focused business unit.

At the same time, Essex Speciality Products Inc., a wholly owned subsidiary of The Dow Chemical Company, was also integrated into Dow Automotive. In January 2001, Dow Automotive acquired Gurit-Essex AG (pioneers of direct glazing technology) and its business groups, which like Essex and its other global affiliates, has served the automotive industry since 1960.

With a product portfolio including polypropylene, nylon, ABS, polycarbonate, SAN, crystalline polymers, thermoplastic urethanes, adhesive films, engineering plastic blends, polyurethane and vinyl ester resins, Dow Automotive are major suppliers of materials, parts modules & systems for the automotive industry. With the integration of Essex & Gurit-Essex this portfolio is extended to glass bonding systems, structural adhesives, reinforcing composites, sealer systems acoustical/structural foams & acoustical damping systems.

As one of the leading manufacturers and distributors to the commercial vehicle body-building and associated industries, Albert Jagger can combine

considerable experience gained supplying polyurethanes with Dow Automotive's knowledge of bonding adhesives/sealants to offer an unprecedented partnership supplying superior products and systems.

We are also able to provide extensive laboratory facilities where applications engineers can determine the suitable adhesive or sealing material along with the relative pre-treatment stages. The material can then be supplied in the usual cartridges and sausages, or if required, in the larger 22 litre or 200 litre drums. Thus offering a complete product range complimented by an extensive system of applicators, both manual and automated.

SYSTEM SELECTION

	Steel - mild	Steel - galvanised	Steel - powder coat	Steel - paint	Steel - stainless	Aluminium	Glass - plain	Glass - ceramic frit	Fibreglass	GRP	ABS	Polycarbonate	Plywood
Abrade	•••					•••							
Betaclean 3350	•••	•••			•••	•••		•••					
Betaclean 3900			•••	•••			•••		•••	•••	•••	•••	
Betaclean 3300								•••					
Betaprime 1707	•••	•••			•••	•••							
Betaprime 5500			•••	•••				•••			•••		
Betaprime 5004							•••*	•••					
Betamate 7120	•••	•••	•••	•••	•••	•••	•••	•••	•••	•••	•••	•••	•••
Betamate 7185	•••	•••	•••	•••	•••	•••	•••	•••	•••	•••	•••	•••	•••
Betalink 1102	•••	•••	•••	•••	•••	•••			•••	•••	•••	•••	•••
Betaseal 1407	•••	•••	•••	•••	•••	•••	•••	•••	•••	•••	•••	•••	•••
Betamate 2700	•••	•••	•••	•••	•••	•••	•••	•••	•••	•••	•••	•••	•••

* - To ensure sufficient UV protection, it is advisable to fit aditional protective cover strips.

The information shown above is for quidance only & implies no liability as to the usage of the product listed. Since the applications, utilisation & processing of the products are beyond our control, the information given is not intended to replace individual trials with the product to establish their suitability for specific applications.

www.albert-jagger.co.uk Walsall: 01922 471000 Heywood: 01706 692110 Romsey: 01794 525870

Seam Sealants/Adhesives - BETAFILL™

fill & seal in one operation

BETAFILL™ *seam sealants from Dow Automotive provide factory standard products for sealing, filling and for bonding lightweight materials. Available in black, grey and white, these single component, moisture curing polyurethanes provide permanent elasticity and good adhesion to a wide variety of different substrates.*

Applied using either manual or pneumatic guns, ***BETAFILL™*** *sealants can be abraded once cured and are over-paintable with most systems.*

To guarantee a permanent bond the use of the BETACLEAN™ range of cleaners is recommended when applying ***BETAFILL™*** *to ensure all surfaces are dry, and free from dirt, grease and oil.*

On certain substrates the use of wipes, cleaners and primers is required but ***BETAFILL™*** *can be applied primerless on:*

- *Coated sheet steel*
- *Glass reinforced plastic (GRP)*
- *Polyurethane (PUR, PUR-RIM)*
- *Polycarbonate (PC)*
- *PUR plasticised, PUR hard*
- *PVC*
- *Wood*

Sealing of vehicle body joints and seams provides added protection against corrosion while also protecting interior compartments from dust, dirt and moisture. As well as sealing, ***BETAFILL™*** *sealants also achieve bonding, acoustic, and thermal improvements.*

Typically used on light commercial vehicle, heavy truck, recreational vehicle, bus, coach and many other industrial applications for:

- *Internal seam joints between panels*
- *Seam sealing on GRP roof panels*
- *Sealing aluminium fabrications*
- *Gap filling between panels*
- *Cosmetic finishing of internal/external joints*
- *Sealing of lightweight construction materials*
- *Bedding compound to absorb shocks & vibrations*
- *Sealing of wood, metal, plastic door frames & window fittings*
- *Bulkhead sealing & door skin fixing*
- *Wheel arch sealing*

BETAFILL™ 10210, 10211 & 10215

- *Polyurethane technology*
- *Available in black, white & grey*
- *Flexible body repair - seam sealer, finisher & filler*
- *Combines medium bonding sealing properties*
- *Easily abraded*
- *Over paintable*

- **2190/87551** - 310ml cartridge (white)
- **2190/87556** - 600ml sausage (white)
- **2190/87500** - 310ml cartridge (grey)
- **2190/87338** - 600ml sausage (grey)
- **2190/87520** - 310ml cartridge (black)
- **2190/87523** - 600ml sausage (black)

BETAFILL™ 10101

- *Polyoxypropylene (POP)technology*
- *Available in grey only*
- *Sprayable*
- *UV stable*
- *Over-paintable, wet-on-wet*

- **2190/87133** - 310ml cartridge (grey)

TM - Trademarks of Dow Chemical Company.

Dow: Adhesive Sealants

Dow: Adhesive Sealants

The broadest material portfolio developed and proven to perform to stringent automotive OEM standards. Materials offering innovative and functional solutions technology to the global commercial transportation industries.

Adhesive Sealants - BETALINK™

superior sealing solutions

*Due to in-built adhesion promoters **BETALINK™ 1102** can be applied to a number of semi-structural bonding and sealing applications with the minimal amount of surface preparation required. A single component, moisture curing, polyurethane **BETALINK™ 1102** from Dow Automotive shows exceptional tolerance to extreme temperatures ranging from -40°C to +80°C with short term resistance up to +120°C (once cured).*

*Boasting non-conductive properties **BETALINK™ 1102** benefits from permanent elasticity and good non-sag properties. These properties along with its ability to withstand dynamic stress enables excellent gap filling and vibration dampening on applications with multiple substrates. **BETALINK™ 1102** is particularly versatile for bonding side, roof and floor panel applications consisting of:*

- *Sheet metal*
- *Aluminium*
- *Stainless steel*
- *GRP*
- *PVC*
- *Wood*

Typically used on commercial vehicle, heavy truck, recreational vehicle, bus, coach, rail and many other industrial applications:

- *Body & door panels*
- *Semi structural members*
- *Seating structures*
- *Bulkheads*
- *Roof sheets to cross members*

*Applied using either manual or pneumatic guns. Its high viscosity allows easy pumping, a major benefit when using manual hand guns. **BETALINK™ 1102** can be abraded, once cured, and is over-paintable with most systems.*

*To guarantee a permanent bond the use of the BETACLEAN™ range of cleaners is recommended when applying **BETALINK™ 1102** to ensure all surfaces are dry, and free from dirt, grease and oil.*

BETALINK™ 1102

- *Polyurethane technology*
- *Available in white only*
- *Non conductive*
- *In built adhesion promoters*
- *Over paintable*
- *Easily abraded*

- **2190/87206** - 310ml cartridge (white)
- **2190/87210** - 600ml sausage (white)

TM - Trademarks of Dow Chemical Company.

Structural Bonding - BETASEAL™ & BETAMATE™

structural enhancement

*Utilising advanced polyurethane technology, the **BETASEAL™** & **BETAMATE™** products are single component, high viscosity, structural bonding adhesives, providing high performance adhesion to a vast range of substrates and in simulated tests out-performed conventional methods of mechanical fasteners.*

***BETASEAL™** & **BETAMATE™** products utilise bonding technology which addresses key design and manufacturing issues particularly within the bus, truck and rail industries leading to improved vehicle durability by:*

- *Eliminating substrate contact*
- *Improving rigidity of body structure*
- *Reducing overall vehicle weight*
- *Eliminating galvanic corrosion*
- *Decreasing production times*

***BETASEAL™ 1407** has been specifically developed to offer users a multi-functional adhesive capable of numerous bonding and sealing applications for vehicle assembly construction. **BETASEAL™ 1407** is easily pumpable at temperatures down to +5°C and its non conductive properties make it ideal for both glass and metal bonding (when combined with an etch primer).*

*'RAIL APPROVED' **BETAMATE™ 7120** offers engineers and designers alike the opportunity to build structural functionality through glass and glazing units, enabling light-weight construction materials to be utilised throughout the build process.*

*Significant streamlining of production processes can be achieved through the use of **BETAMATE™ 7185**. High sag resistance along with instant-grab, quick-fix properties, when applied warm, eliminates the necessity of mechanical fixing aids and facilitates faster drive off times.*

Bonding of headliners and roof, floor and body panels with structural adhesives improves overall body stiffness and offers protection against corrosion and fatigue normally associated with welding and mechanical fasteners.

Dow: Adhesive Sealants

BETAMATE™ 7120

- *'Rail' approved*
- *Fully UV stable*
- *Non conductive*
- *High strength polyurethane technology*
- *Available in black only*

- **2190/85108** - 300ml cartridge (black)
- **2190/85470** - 600ml sausage (black)

BETASEAL™ 1407

- *High strength polyurethane technology*
- *Available in black only*
- *UV resistant*
- *Non conductive*
- *Easily extruded*
- *Bonds dissimilar substrates*
- *Vibration absorption reduces metal fatigue*

- **2190/286529** - 310ml cartridge (black)
- **2190/286530** - 400ml sausage (black)

BETAMATE™ 7185

- *High strength polyurethane technology*
- *Available in black only*
- *Instant grab when warm applied*
- *Streamlines production processes*
- *Bonds dissimilar substrates*
- *Vibration absorption reduces metal fatigue*

- **2190/85813** - 600ml sausage (black)

TM - Trademarks of Dow Chemical Company.

Dow: Adhesive Sealants

Through the use of the full range of cleaners, primers and adhesives, including new primerless technologies, vehicle manufacturers are assured of superior direct glazing that improves vehicle structure and provides protection from natural elements such as moisture, temperature variants & UV light.

Direct Glazing - BETASEAL™ & BETAMATE™

advanced bonding technologies

BETASEAL™ & BETAMATE™ *glass bonding systems from Dow Automotive are used worldwide for the structural bonding and sealing of stationary glass and help vehicles meet international safety standards for barrier, rollover and roof crush regulations. New technologies include primerless to paint, non- conductive, high modulus and fixture free application of adhesives.*

Applied using either manual or pneumatic guns, ***BETASEAL™ & BETAMATE™*** *bonding adhesives offer high tensile strength whilst still maintaining permanent joint elasticity, providing product performance to the toughest OEM specifications.*

BETASEAL™ & BETAMATE™ *formulations provide a wide range of mechanical properties to suit all vehicle requirements. Formulations developed to be compatible with today's modern production processes and consistently provide the capability to significantly optimise the direct glazing process - saving costs and reducing assembly times.*

Moisture curing, single component polyurethanes, ***BETASEAL™ & BETAMATE™*** *structural adhesives have a high modulus content suitable for applications requiring high shear resistance. Benefits include:*

- *Excellent performance on glass & ceramic substrates*
- *Compatible with most automotive paint technologies*
- *Primerless to paint technology*
- *Improves body structure rigidity*
- *Reduces overall vehicle weight*
- *Decreases production times*
- *High performance to the toughest OEM specifications*

Many modern vehicles today incorporate integral antennas into both front and back windscreens. Non-conductive adhesive formulations ensure that radio signals are not compromised. Chemical technology which also reduces contact corrosion, improving bond stability along with vehicle durability.

BETAMATE™ 7120

- *'Rail' approved*
- *Fully UV stable*
- *Non conductive*
- *High strength polyurethane technology*
- *Available in black only*

- **2190/85108** - 300ml cartridge (black)
- **2190/85470** - 600ml sausage (black)

BETASEAL™ 1407

- *High strength polyurethane technology*
- *Available in black only*
- *UV resistant*
- *Non conductive*
- *Easily extruded*
- *Bonds dissimilar substrates*
- *Vibration absorption reduces metal fatigue*

- **2190/286529** - 310ml cartridge (black)
- **2190/286530** - 400ml sausage (black)

BETAMATE™ 7185

- *High strength polyurethane technology*
- *Available in black only*
- *Instant grab when warm applied*
- *Streamlines production processes*
- *Bonds dissimilar substrates*
- *Vibration absorption reduces metal fatigue*

- **2190/85813** - 600ml sausage (black)

TM - Trademarks of Dow Chemical Company.

Urethane Primers - BETAPRIME™

innovative chemical technology

In order to obtain optimum adhesion results the correct surface preparation is imperative. A chemical bond between two separate substrate surfaces is required to guarantee maximum performance from the adhesive compound. Once cleaned, to eliminate any contaminants such as rust, dirt, grease or oils, an adhesion promoter from Dow Automotive's ***BETAPRIME™*** *range of surface primers is used to encourage cross-linking between the substrate and the adhesive compound.*

BETAPRIME™ 1707*, is a two part, bare metal, etch primer which provides an excellent barrier and protection for corrosion prone areas. Abrasion of all metal substrate surfaces is advisable prior to application in order to physically remove any surface contaminants, particularly rust.*

BETAPRIME™ 5404 *saves both time and money by simplifying installations and reducing stocked inventory requirements. With a new improved formulae, this single multifunctional primer is used to promote adhesion on a wide variety of substrates ranging from painted metal (including powder coated steelwork) to numerous plastics such as GRP, polycarbonate, fibreglass, perspex, ABS and PVC. Giving a total black out when applied,* ***BETAPRIME™ 5404*** *protects any polyurethane, subsequently applied, from the degenerating effects of aggressive UV light; particularly important when using clear substrates such as perspex and acrylics.*

BETAPRIME™ 5500 *is used for direct glazing applications, where the glass plays an integral part in the vehicles structural integrity. Designed specifically for glass with a ceramic edge, this one-step, black primer chemically prepares glass and frit to assure optimal chemical link with the adhesive. The unique formulation dramatically reduces production process times with its fast drying time (5 minutes minimum) and its ability to prime and re-activate previously applied PU; particularly useful when replacing damaged glass.*

Superior strength, performance and safety achieved through innovative R&D and chemical science expertise second to none. Proven results over years of success producing advanced system solutions to stringent OEM automotive specifications

Dow: Adhesive Sealants

BETAPRIME™ 1707

- *2 part, grey primer*
- *Etch primer for bare metals*
- *30 minute drying time*
- *Active for 72 hours*

- **2190/218376** - 160ml combined (grey)

BETAPRIME™ 5404

- *1 part, black primer*
- *For paint & plastic substrates*
- *10 minute drying time*
- *Active for 24 hours*

- **2190/40868** - 15ml bottle (black)
- **2190/40806** - 250ml bottle (black)

BETAPRIME™ 5500

- *1 part black primer*
- *For glass with ceramic edge*
- *5 minute drying time*
- *Active for 24 hours*
- *Simplified pre-treatment; prep with Betaclean 3300 only*

- **2190/40015** - 15ml bottle (black)
- **2190/40525** - 250ml bottle (black)

TM - Trademarks of Dow Chemical Company.

Dow: Adhesive Sealants

A versatile range of cleaners providing a vital component of advanced surface preparation. From removing dust, dirt, grease and oil to removing excess uncured polyurethane from substrate surfaces or tooling.

Degrease/Clean/Activate - BETACLEAN™

total surface preparation

*For effective cross-linking between the substrate and the adhesive compound to take place, it is imperative that meticulous preparation of the substrate surface takes place. Dow Automotive's **BETACLEAN™** range are extremely efficient cleaners for most applications where elimination of all contaminants such as rust, dirt, grease or oil is required to provide a sound surface prior to priming.*

***BETACLEAN™ 3300**, is a light blue, opaque solution containing both isopropanol and demineralised water. Applied via a handy wet/dry wipe or a spray bottle, this versatile, smear free, glass cleaner removes dust, dirt and grease and can be used for the visual inspection of glass quality prior to installation as it readily highlights both fingerprints and imperfections. **BETACLEAN™ 3300** is used primarily in conjunction with BETAPRIMETM 5500 as part of a one step glass preparation system.*

***BETACLEAN™ 3350** is a clear, heptane based cleaning solution designed to remove heavy contamination of oil and grease from bare metal substrates. Particularly useful for removing polyurethane residues from both applications and tooling. Typical substrates include:*

- *Stainless steel*
- *Galvanised steel*
- *Copper*
- *Mild steel*
- *Aluminium*
- *Brass*

***BETACLEAN™ 3900** is a clear, isopropanol cleaner, which ensures substrate surfaces are free from dirt, dust and grease residues such as fingerprints. Recommended for use on:*

- *Most painted surfaces*
- *Powder coated steel*
- *Polycarbonate*
- *Most plastics*
- *Fibreglass, GRP, ABS*

*Designed specifically as a combined cleaner and activator for clear substrates such as glass and plastics (acrylics/perspex). A silane based cleaner, **BETAWIPE™ VP 04604**, activates substrate surfaces prior to application of BETAPRIME™ 5004. **BETAWIPE™ VP 04604** is also used to give superior cross linking when applying BETALINK™ 1102 to substrates such as GRP, aluminium and painted metal.*

BETACLEAN™ 3300

- *Isopropanol/demineralised water*
- *12 month shelf life*
- *Sprayable*
- *Smear free, glass cleaner*

- **2190/49107 -** 25 litre pail
- **2190/227936 -** Tap (for 25l pail)
- **2190/49110 -** Satchet (tissues)

BETACLEAN™ 3350

- *Heptane solution*
- *1 month open time*
- *Wipe on/wipe off*
- *Suitable for bare metal substrates*

- **2190/79150** - 1 litre bottle

BETACLEAN™ 3900

- *Isopropanol solution*
- *1 month open time*
- *Wipe on/wipe off*
- *Suitable for most plastics & painted metal substrates.*

- **2190/79110** - 1 litre bottle

BETAWIPE™ VP 04604

- *Silane solution*
- *5 day open time*
- *Active for 24 hours*
- *2 minute drying time*

- **2190/40151** - 250ml bottle
- **2190/40654** - 15ml bottle
- **2190/40641** - 1 litre bottle

TM - Trademarks of Dow Chemical Company.

Consumables

CONSUMABLES	
	Applicators
2190/20010	100 ml, plastic applicator bottle
2190/20011	200 ml plastic applicator bottle
2190/60018	Plastic cap for applicator bottle
2190/60024	Felt pad for applicator bottle
2190/60041	Wire mounted, felt applicator pad
2190/15010	Uncut cartridge nozzle
2190/60003	Pre-cut cartridge nozzle
2190/60228	Pre-cut sausage nozzle

Ancillary

ANCILLARY PRODUCTS	
	SLIG Hand cleaner
2190/79200	250 ml tube
2190/79208	2 litre dispenser pack
2190/26180	2 litre dispensor unit

2189/240	240v HEATER
	For use with BETAMATE 7185.
	Holds 4 x 600ml sausages
2189/110	110v HEATER
	For use with BETAMATE 7185.
	Holds 4 x 600ml sausages

Dow: Adhesive Sealants

TM - Trademarks of Dow Chemical Company.

Tooling

2189/73116	**'ASCOT' HAND GUN**
	Heavy duty hand gun.
	Suitable for use with 310ml cartridge.

2189/042	**HAND GUN**
	Suitable for use with 400ml sausage.
2189/046	**HAND GUN**
	Suitable for use with 600ml sausage.

2189/95034	**PNEUMATIC AIR GUN**
	Suitable for use 310ml cartridge.
2189/95042	**PNEUMATIC AIR GUN**
	Suitable for use with 400ml & 600ml sausages.

2189/95150	**'BETAPRESS' PNEUMATIC AIR GUN**
	For use with Betafill 10101 310ml cartridge.
	Adjustable settings for both 'beading' & 'spraying'.

2189/95046	**240v 'BETAGUN III'**
2189/95051	**110v 'BETAGUN III'**
	Electric gun with a dynamic mixer.
	For use with Betamate E 2700, ie. 2 x 300ml cartridge

2189/95167	**14v BATTERY OPERATED GUN**
	For use with 600ml sausage.
	Complete with charger & 1 battery.

2192/002	**GREY SEAMSEAL BEDDING SEALANT**
	380ml cartridge.
	Non setting rubber compound for joining metal joints on applications such as trailers, horseboxes and caravans.

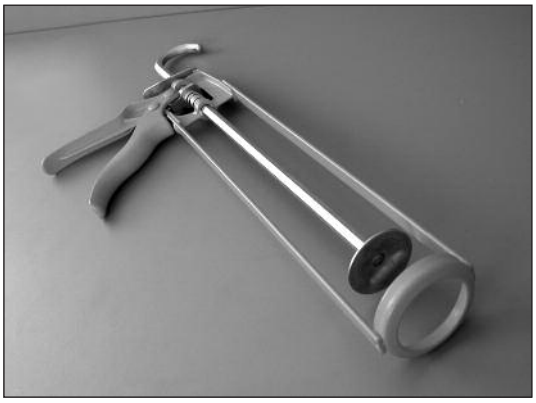

2169/001	**SKELETON HAND GUN**
	For use with 300ml cartridges

Adhesive Tapes

A range of foam sealants manufactured from expanded PVC. They are essentially closed cell structures, coated with a strong, pressure-sensitive acrylic adhesive, which are clean, economical and easy to use. The 6452 range is medium density foam requiring 30% compression to create an effective water seal on applications such as glazing, access doors. They are ideally suited for the commercial vehicle body-building industry.

BLACK PVC FOAM TAPE	
	Acrylic adhesive, single side
6452/03012	3mm x 12mm x 25m roll
6452/03019	3mm x 19mm x 25m roll
6452/03025	3mm x 25mm x 25m roll
6452/06019	6mm x 19mm x 12m roll
6452/06025	6mm x 25mm x 12m roll
6452/06050	6mm x 50mm x 12m roll

Manufactured from PVC and coated with a strong, pressure-sensitive, acrylic adhesive. The 6469 tape is a low density foam on a fixed polyester liner which ensures an easy release 'make or break' seal. 30% compression is required to create an effective draught proof seal on applications such as glazing and vehicle body-work where a water proof seal is not required.

WHITE PVC FOAM TAPE	
	Single sided tape with a fixed polyester liner.
6469/05012	5mm x 12mm x 12m roll

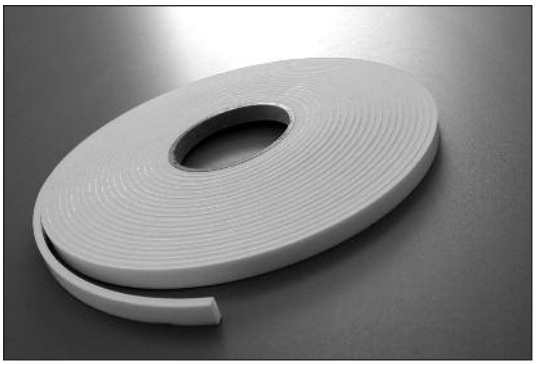

A general purpose double sided Polyester foam bonding tape. Closed cell with a rubber resin coat on both sides. Excellent adhesion on Lexan polycarbonate.

WHITE POLYESTER FOAM TAPE	
	Double sided tape
6484/01625	1.5mm x 25mm x 40m roll

The 6476 tape is a pressure sensitive, rubber-resin adhesive designed for bonding to difficult substrates, such as polyethylene and polypropylene. It is not suitable for use on plasticised PVC or on glazing applications due to its low UV stability.

AMBER RUBBER RESIN	
	Bonding tape
6476/00426	0.4mm x 25mm x 20m roll

Notes

Notes

www.albert-jagger.co.uk Walsall: 01922 471000 Heywood: 01706 692110 Romsey: 01794 525870

albert Jagger limited

HEYWOOD - branch

Foxhill Works,
Fox Street,
Heywood,
Lancashire.
OL10 1EA
United Kingdom

t: 01706 692110
f: 01706 625936

e: heywood@albert-jagger.co.uk

WALSALL

Head Office/Export

Centaur Works
Green Lane
Walsall
West Midlands
WS2 8HG
United Kingdom

t: +44 (0) 1922 471000
f: +44 (0) 1922 648021

e: sales@albert-jagger.co.uk
e: export@albert-jagger.co.uk

Trade Counters

Each branch has a trade counter available with friendly support from our knowledgeable staff offering a speedy collection point and easy local access.

Opening Times

Monday to Thursday
8.30am - 5.15pm

Friday
8.30am - 4.00pm

Saturday/Sunday
Closed

Credit Cards Accepted

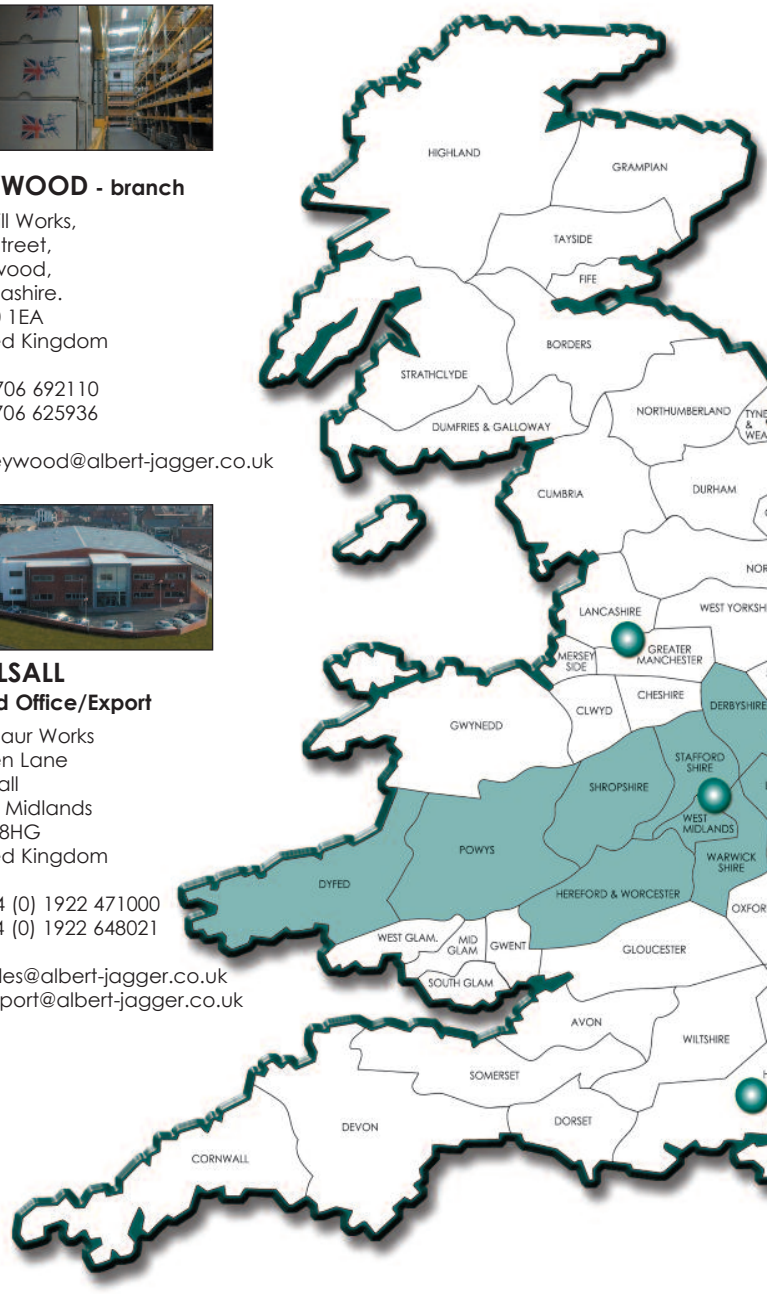

ROMSEY - Branch

Unit 2,
Frobisher Industrial Centre,
Budds Lane,
Romsey,
Hampshire.
SO51 0EZ
United Kingdom

t: 01794 525870
f: 01794 515586

e: romsey@albert-jagger.co.uk

www.albert-jagger.co.uk

On-line catalogue & latest new products.